N71-76738

N71 76738 LMA790-3-LM 11 and Subsequent

APOLLO OPERATIONS HANDBOOK

LUNAR MODULE

LM 11 AND SUBSEQUENT

VOLUME II

OPERATIONAL PROCEDURES

Approved _____
Harlow K. Dunton, Ass't Program Director, Support

Approved _____
Bernard Kram, Head, LM Crew Systems

Approved _____
W. R. Bischoff, Ass't Program Director, Engineering

NAS 9-1100
Exhibit E Paragraph 10.4

TYPE I DOCUMENT

Prepared under direction of
THE NATIONAL AERONAUTICS AND SPACE ADMINISTRATION
SPACECRAFT SYSTEMS BRANCH / FLIGHT CREW SUPPORT DIVISION

This publication supersedes LMA790-3-LM 10 and subsequent dated 1 July 1971

ETHPAGE / NEW YORK

26 SEPTEMBER 1971

92

INSERT LATEST CHANGED PAGES. DESTROY SUPERSEDED PAGES.

LIST OF EFFECTIVE PAGES

NOTE: The portion of the text affected by the changes is indicated by a vertical line in the outer margins of the page.

TOTAL NUMBER OF PAGES IN THIS PUBLICATION IS 957 CONSISTING OF THE FOLLOWING:

Page No.	Issue
Title	26 September 1971
A thru B	26 September 1971
C Blank	26 September 1971
i thru vii	26 September 1971
viii Blank	26 September 1971
ix thru xviii	26 September 1971
xix thru xxxiii	26 September 1971
xxxiv Blank	26 September 1971
4.0-1	26 September 1971
4.0-2 Blank	26 September 1971
4.1-1 thru 4.1-11	26 September 1971
4.1-12 Blank	26 September 1971
4.2-1 thru 4.2-12A	26 September 1971
4.2-12B Blank	26 September 1971
4.2-13 thru 4.2-28A	26 September 1971
4.2-28B Blank	26 September 1971
4.2-29 thru 4.2-61	26 September 1971
4.2-62 Blank	26 September 1971
4.3-1 thru 4.3-28	26 September 1971
4.4-1 thru 4.4-4A	26 September 1971
4.4-4B Blank	26 September 1971
4.4-5 thru 4.4-46A	26 September 1971
4.4-46B Blank	26 September 1971
4.4-47 thru 4.4-62B	26 September 1971
4.4-63 thru 4.4-67	26 September 1971
4.4-68 Blank	26 September 1971
4.5-1 thru 4.5-2A	26 September 1971
4.5-2B Blank	26 September 1971
4.5-3 thru 4.5-4A	26 September 1971
4.5-4B Blank	26 September 1971
4.5-5 thru 4.5-40	26 September 1971
4.6-1 thru 4.6-8A	26 September 1971
4.6-8B Blank	26 September 1971
4.6-9 thru 4.6-14A	26 September 1971
4.6-14B Blank	26 September 1971
4.6-15 thru 4.6-28A	26 September 1971
4.6-28B Blank	26 September 1971
4.6-29 thru 4.6-42A	26 September 1971
4.6-42B Blank	26 September 1971
4.6-43 thru 4.6-46A	26 September 1971
4.6-46B Blank	26 September 1971
4.6-47 thru 4.6-64A	26 September 1971
4.6-64B Blank	26 September 1971
4.6-65 thru 4.6-66A	26 September 1971
4.6-66B Blank	26 September 1971
4.6-67 thru 4.6-83	26 September 1971
4.6-84 Blank	26 September 1971
4.7-1 thru 4.7-34B	26 September 1971
4.7-35 thru 4.7-44A	26 September 1971
4.7-44B Blank	26 September 1971
4.7-45 thru 4.7-48	26 September 1971
4.8-1 thru 4.8-6A	26 September 1971
4.8-6B Blank	26 September 1971
4.8-7 thru 4.8-12A	26 September 1971
4.8-12B Blank	26 September 1971
4.8-13 thru 4.8-18A	26 September 1971
4.8-18B Blank	26 September 1971
4.8-19 thru 4.8-22C	26 September 1971
4.8-22D Blank	26 September 1971
4.8-23 thru 4.8-26A	26 September 1971
4.8-26B Blank	26 September 1971
4.8-27 thru 4.8-28	26 September 1971
4.9-1 thru 4.9-6A	26 September 1971
4.9-6B Blank	26 September 1971
4.9-7 thru 4.9-10A	26 September 1971
4.9-10B Blank	26 September 1971
4.9-11 thru 4.9-12D	26 September 1971
4.9-13 thru 4.9-14A	26 September 1971
4.9-14B Blank	26 September 1971
4.9-15 thru 4.9-16D	26 September 1971
4.9-17 thru 4.9-22B	26 September 1971
4.9-23 thru 4.9-28B	26 September 1971
4.9-29 thru 4.9-30	26 September 1971
4.10-1 thru 4.10-12A	26 September 1971
4.10-12B Blank	26 September 1971
4.10-13 thru 4.10-18A	26 September 1971
4.10-18B Blank	26 September 1971
4.10-19 thru 4.10-44A	26 September 1971
4.10-44B Blank	26 September 1971
4.10-45 thru 4.10-54B	26 September 1971
4.10-55 thru 4.10-66A	26 September 1971
4.10-66B Blank	26 September 1971
4.10-67 thru 4.10-118A	26 September 1971
4.10-118B Blank	26 September 1971
4.10-119 thru 4.10-127	26 September 1971
4.10-128 Blank	26 September 1971
4.11-1 thru 4.11-11	26 September 1971
4.11-12 Blank	26 September 1971
4.12-1 thru 4.12-2A	26 September 1971
4.12-2B Blank	26 September 1971
4.12-3 thru 4.12-23	26 September 1971
4.12-24 Blank	26 September 1971
4.13-1 thru 4.13-16A	26 September 1971
4.13-16B Blank	26 September 1971
4.13-17 thru 4.13-46A	26 September 1971
4.13-46B Blank	26 September 1971
4.13-47 thru 4.13-49	26 September 1971
4.13-50 Blank	26 September 1971
4.13-51	26 September 1971
4.13-52 Blank	26 September 1971
4.14-1 thru 4.14-14	26 September 1971

NASA

LIST OF EFFECTIVE PAGES

INSERT LATEST CHANGED PAGES. DESTROY SUPERSEDED PAGES.

NOTE: The portion of the text affected by the changes is indicated by a vertical line in the outer margins of the page.

Page No.	Issue
4.15-1 thru 4.15-26A	26 September 1971
4.15-26B Blank	26 September 1971
4.15-27 thru 4.15-43	26 September 1971
4.15-44 Blank	26 September 1971
5.0-1	26 September 1971
5.0-2 Blank	26 September 1971
5.1-1	26 September 1971
5.1-2 Blank	26 September 1971
5.2-1 thru 5.2-29	26 September 1971
5.2-30 Blank	26 September 1971
5.2-31 thru 5.2-50A	26 September 1971
5.2-50B Blank	26 September 1971
5.2-51 thru 5.2-54A	26 September 1971
5.2-54B Blank	26 September 1971
5.2-55 thru 5.2-63	26 September 1971
5.2-64 Blank	26 September 1971
5.3-1 thru 5.3-10A	26 September 1971
5.3-10B Blank	26 September 1971
5.3-11 thru 5.3-16	26 September 1971
5.4-1 thru 5.4-14A	26 September 1971
5.4-14B Blank	26 September 1971
5.4-15 thru 5.4-24C	26 September 1971
5.4-24D Blank	26 September 1971
5.4-25 thru 5.4-38	26 September 1971
D-1 thru D-19	26 September 1971
D-20 Blank	26 September 1971
E-1	26 September 1971
E-2 Blank	26 September 1971
E-3	26 September 1971
E-4 Blank	26 September 1971
E-5	26 September 1971
E-6 Blank	26 September 1971
F-1 thru F-16	26 September 1971

NASA

B/C

INTRODUCTION

PURPOSE

The Apollo Operations Handbook (AOH) is the primary means of documenting LM descriptions and procedures. The AOH is published in two separately bound volumes. This information is useful in support of program management, engineering, test, flight simulation, and real-time flight support efforts.

DESCRIPTION

Volume I describes the LM subsystems and equipment.

Volume II contains crew operational procedures: normal, backup, abort, malfunction, and emergency. These procedures define the sequence of actions necessary for safe and efficient subsystem operation. The procedures are verified during vehicle and component testing and simulations.

Normal procedures are used when all subsystems are operating properly. Backup procedures are used to accomplish the objectives of the normal procedures, when equipment failure or other anomaly prevents use of the normal procedures. Abort procedures cover crew activity for abort modes. Malfunction procedures provide symptoms, diagnoses, and corrective actions for subsystem malfunctions. Emergency procedures deal with situations that require immediate action to avoid or alleviate a hazardous condition.

Changes to volume II will be submitted through MSC CG2. GAC changes will show justification and authorization, and will be submitted to LM Crew Systems for approval.

RESPONSIBLE CONTRACTOR ORGANIZATION

At GAC, the single point of contact for the procedures in volume II of the AOH is the Head, LM Crew Systems Group, Systems Engineering Section, LM Project, Grumman Aerospace Corporation, Bethpage, N.Y. 11714. The LM Crew Systems Group is the central coordination and control agency in providing LM subsystems procedures for use by NASA in training flight crewmen and mission support personnel. The LM Crew Systems Group ensures that all data are current and technically correct.

FORMAT

NORMAL/BACKUP PROCEDURES

Normal/backup procedures are presented in the following sequence: basic modular operational blocks, subgroups of functional tasks or subsystems, and numerical sequence within subgroups. The following paragraphs explain the tabular format.

The "CREWMAN" column indicates which crewmember is assigned to perform the specific procedure. The following abbreviations are used in this column.

CDR . . . . Commander
CMP . . . . Command Module Pilot
LMP . . . . Lunar Module Pilot

The "PNL" column indicates the location of a particular control or display, by panel number or equipment designation. (See figure E-1 and E-2.) In addition to the panel numbers, the following equipment designations are used in this column.

ACA . . . . attitude controller assembly
ALSEP . . . Apollo lunar surface experiment package
AOT . . . . alignment optical telescope
ECS . . . . ECS module
MESA . . . modularized equipment stowage assembly
PGA . . . . pressure garment assembly
PLSS . . . portable life support system
RCU . . . . remote control unit
TTCA . . . thrust/translation controller assembly
UTL . . . . utility light panel
+Z27 . . . +Z27 bulkhead

The "PROCEDURES" column contains groups of steps, or overall tasks, involved in performing a complete operation.

The "REMARKS" column provides the constraints and rationale that support the operational procedure. The scope of this information will increase as the procedures are refined through continued application by GAC and NASA during mission simulations and real-time mission operations.

Controls and displays are identified by their respective placards. Lengthy placards have been shortened herein. The following abbreviations are used for controls and displays.

caut lt . . . . . caution annunciator
CB . . . . . d-c circuit breaker
CB/AC . . . . . a-c circuit breaker
comp caut lt . . . . component caution light
cont . . . . . continuous rotary control
ind . . . . . meter, gage, or digital display
ind pwr fail lt . . indicator power failure light
lt . . . . . light
pb . . . . . pushbutton switch (except pushbutton/light)
pb/lt . . . . . pushbutton/light
sel . . . . . detent rotary switch
sw . . . . . toggle switch
tb . . . . . talkback
tw . . . . . thumbwheel control
vlv . . . . . manually operated valve
warn lt . . . . . warning annunciator

NOTE

MASTER ALARM - on (or off) indicates that both MASTER ALARM pb/lts and the audible tone are on (or off).

CONTINGENCY PROCEDURES

Contingency procedures comprise abort, malfunction, and emergency procedures.

Abort Procedures

Abort procedures are not included at this time. They may be supplied by NASA at a later date.

Malfunction Procedures

Malfunction procedures enable recognition of subsystem malfunctions, determination of their cause, isolation and/or correction of the failure, and determination of the effect on the subsystem and the mission. The procedures cover all significant single failures. To prevent the procedures from becoming complex and unmanageable, double unrelated failures are not covered. The malfunction procedures are arranged by subsystem, or subsystem section (PGNS, AGS, CES, DPS, APS, etc), in a three-column format explained in the following paragraphs.

The "SYMPTOM" column contains logic blocks that allow entry into the malfunction procedure. When applicable, data under these blocks explain and qualify the symptom or condition. The symptoms are arranged numerically within each subsystem or subsystem section.

The "PROCEDURE" column contains a step-by-step logic flow diagram, consisting primarily of action blocks, decision blocks, and failure blocks that enable failure correction and isolation. Caution and warning blocks are included for conditions, which, if not corrected, may degrade the operational integrity of a subsystem or may adversely affect crew safety. Remote event symbols refer to related remarks, to another step of the procedure, or to a step in another malfunction procedure.

The "REMARKS" column contains supplemental data related to, and referenced from, the logic blocks in the "SYMPTOM" and "PROCEDURE" columns.

Emergency Procedures

Emergency procedures follow the same format as normal/backup procedures.

CHANGE REQUEST SUBMISSION GUIDELINES

1. Be specific in your recommendations or comments; for example:
   - When recommending changes in text, provide new text to replace the old.
   - When pointing out technical errors, provide new technical data.
   - When suggesting deletions, specify exactly what should be deleted.

2. Consider the following when preparing recommendations:
   - Are data in usable engineering units?
   - Does arrangement of data facilitate use? If not, suggest appropriate changes.
   - What areas need revision? Be specific.

3. If you have knowledge or sources that could be used to update any part of the handbook, provide this information and cite references.

4. Indicate specific technical or administrative problems that may be created by the handbook contents or format. Suggest specific changes to eliminate these problems.

5. Note the impact on, and relationship with, specifications criteria, constraints, etc. that this handbook should or should not have.

6. GAC personnel use GAC form No. 3163 (7-70). The following information is keyed to, and explains how to fill in, the GAC change request form:

   (1) This space is left blank by the originator. GAC change numbers are assigned by LM Publications.

   (2) The originator shall indicate which vehicles are affected by the change request.

   (3) Enter the date that the change request is initiated.

   (4) The originator shall enter his name, department, and telephone extension.

   (5) Enter the vehicle number that appears on the title page of the AOH, Vol II, to which the change request is written.

   (6) Enter the basic or change date that appears on the title page of the AOH, Vol II, to which the change request is written.

   (7) Enter the number of the page affected by the change request.

   (8) Enter the number of the paragraph affected by the change request.

   (9) Enter the number of the step and, if necessary, the number of the line affected by the change request.

   (10) Explain, in detail, the change being requested.

   (11) Explain, in detail, the reason for the change.

   (12) The cognizant GAC subsystem engineer shall initial and date all change requests.

   (13) (14) (15) GAC disposition shall be made by the head of LM Crew Systems. He shall indicate whether the change request is approved or disapproved, sign his full name, and fill in the date of disposition.

   (16) (17) (18) NASA disposition shall be made by the MSC Change Control Board. A representative of the board shall indicate whether the change request is approved or disapproved, sign his full name, and fill in the date of disposition.

   (19) The MSC Change Control Board shall assign all suspense dates.

7. NASA personnel use MSC form No. 482 (Rev Jun 68). The following information is keyed to, and explains how to fill in, the MSC change request form:

(1) (2) (3) The originator shall enter his name, organization, and the date that the change request is initiated.

(4) This space is left blank by the originator. MSC change numbers are assigned by the MSC Change Control Board.

(5) The originator shall indicate which vehicles are affected by the change request.

(6) Enter the title of the manual, including the vehicle number that appears on the title page, to which the change request is written.

(7) Enter the document number to which the change request is written.

(8) Enter the number of the page affected by the change request.

(9) Enter the basic or change date that appears on the title page of the AOH, Vol II, to which the change request is written.

(10) Enter the number of the step and, if necessary, the number of the line affected by the change request.

(11) Explain, in detail, the change being requested.

(12) Explain, in detail, the reason for the change.

(13) If applicable, enter pertinent remarks.

(14) (15) (16) GAC disposition shall be made by the head of LM Crew Systems. He shall indicate whether the change request is approved or disapproved, sign his full name, and fill in the date of disposition.

(17) (18) (19) Final disposition shall be made by the NASA MSC Change Control Board. A representative of the board shall indicate whether the change request is approved or disapproved, sign his full name, and fill in the date of disposition.

(20) The MSC Change Control Board shall assign all suspense dates.

APOLLO OPERATIONS HANDBOOK, VOLUME II CHANGE REQUEST

CHANGE NO. (1)	S/C EFFECTIVITY (2)	DATE (3)
INITIATED BY (4)	DEPT.	TELEPHONE EXT.

DOCUMENT AFFECTED

VEHICLE (5)	BASIC/CHANGE DATE (6)	PAGE NO. (7)	PARA. NO. (8)	STEP/LINE NO. (9)

DETAIL CHANGE IN EXACT WORDING

(10)

REASON

(11)

SUBSYSTEM REVIEW DATE (12)

GAC DISPOSITION

☐ APPROVED ☐ DISAPPROVED (13)	HEAD, CREW SYSTEMS SIGNATURE (14)	DATE SIGNED (15)

NASA DISPOSITION

☐ APPROVED ☐ DISAPPROVED (16)	FCOD SIGNATURE (17)	DATE SIGNED (18)	SUSPENSE DATE (19)

*GAC 3163
7-70

GAC Change Request Form

CREW PROCEDURES CHANGE REQUEST

INITIATED BY (1)	ORGANIZATION (2)	DATE (3)
CHANGE NUMBER (4)	S/C EFFECTIVITY (5)	

DOCUMENT AFFECTED

TITLE (6)	DOCUMENT NO. (7)	PAGE NO. (8)	BASIC OR CHANGE DATE (9)	TIME OR STEP NO. (10)

DETAIL CHANGE IN EXACT WORDING

(11)

REASON:

(12)

REMARKS:

(13)

☐ APPROVED ☐ DISAPPROVED (14)	COORDINATOR'S SIGNATURE (15)	DATE (16)

FINAL DISPOSITION

☐ APPROVED ☐ DISAPPROVED (17)	FCOD SIGNATURE (18)	DATE SIGNED (19)	SUSPENSE DATE (20)

MSC Form 482 (Rev Jun 68) *(Previous editions are obsolete)*

MSC Change Request Form

TABLE OF CONTENTS

SECTION	TITLE	PAGE
	INTRODUCTION	i
	FORMAT	ii
	CHANGE REQUEST SUBMISSION GUIDELINES	iv
*1.0	SPACECRAFT	1-1
*2.0	SUBSYSTEMS DATA	2-1
*3.0	CONTROLS AND DISPLAYS	3-1
4.0	NORMAL/BACKUP PROCEDURES	4.0-1
	4.1 Prelaunch Closeout Check	4.1-2
	4.2 Subsystem Activation	4.2-2
	4.2.1 Initial Entry Status Check	4.2-2
	4.2.2 EPS Activation & Checkout	4.2-5
	4.2.3 Primary Glycol Loop Activation	4.2-9
	4.2.4 Circuit Breaker Activation	4.2-10
	4.2.5 Primary Sublimator Activation	4.2-16
	4.2.6 Lighting Activation & Checkout	4.2-16
	4.2.7 Utility Lights Activation & Checkout	4.2-17
	4.2.8 AOT Lighting Check	4.2-17
	4.2.9 COAS Lighting Check	4.2-18
	4.2.10 Caution & Warning Array Checkout	4.2-19
	4.2.11 Timer Electroluminescent (EL) Numeric Check	4.2-20
	4.2.12 Set Mission Timer	4.2-20
	4.2.13 ECS Activation & Checkout	4.2-21
	4.2.13.1 Consumables Check	4.2-21
	4.2.13.2 Glycol Pump Check	4.2-21
	4.2.13.3 SUIT ISOL Valve Check	4.2-22
	4.2.13.4 O2 Supply Activation	4.2-23
	4.2.13.5 Suit Fan Activation, Checkout, and Water Separator Check	4.2-23
	4.2.13.6 O2 Demand Regulator Checkout	4.2-24
	4.2.13.7 In-Flight O2 Demand Regulator Check (Alternative)	4.2-27
	4.2.14 Crewman Connect to LM ECS	4.2-28
	4.2.15 Crewman Disconnect Transfer Umbilical	4.2-28A
	4.2.16 ARS/PGA Pressure Integrity Check	4.2-29
	4.2.17 VHF Activation & Checkout	4.2-31
	4.2.18 VHF B Simplex Check	4.2-33
	4.2.19 S-Band Activation & Checkout, Using Omni Antenna	4.2-34
	4.2.20 S-Band Steerable Antenna Activation and Checkout	4.2-34
	4.2.21 Low-Power S-Band Backup Voice, LBR Check With Steerable Antenna	4.2-40
	4.2.22 S-Band Ranging, Voice, and Telemetry Check	4.2-43
	4.2.23 S-Band FM Check	4.2-43
	4.2.24 Secondary S-Band Transceiver & Power Amplifier Check	4.2-44
	4.2.25 S-Band Backup Voice & Keying Check	4.2-45
	4.2.26 Ascent Battery Activation & Checkout	4.2-45
	4.2.27 APS Temp/Press Prepressurization Check	4.2-48
	4.2.28 DPS Temp/Press Prepressurization Check	4.2-49
	4.2.29 DPS Pressurization & Checkout	4.2-50
	4.2.30 RCS Pressurization	4.2-54
	4.2.31 RCS Hot/Cold Firing Check	4.2-57
	4.2.32 Landing Gear Deploy	4.2-61

*Apollo Operations Handbook, Volume I.

Preceding page blank

TABLE OF CONTENTS (cont)

SECTION	TITLE	PAGE
4.0	NORMAL/BACKUP PROCEDURES (cont)	
4.3	Subsystem Deactivation	4.3-2
4.3.1	Preparation For Sublimator Dryout	4.3-2
4.3.2	Sublimator Dryout	4.3-10
4.3.3	Final Subsystem Deactivation	4.3-12
4.3.4	LM Transfer to CSM Power	4.3-21
4.3.4.1	LM Transfer to CSM Power (Unstaged)	4.3-21
4.3.4.2	LM Transfer to CSM Power (Staged)	4.3-22
4.3.5	LM Transfer to LM LV Power (Backup)	4.3-24
4.3.6	CSM Transfer to LM Power	4.3-25
4.3.6.1	LM Initial Power-Up (CSM Powered Down)	4.3-25
4.3.6.2	CSM Transfer to LM Power (Staged)	4.3-26
4.3.6.3	CSM Transfer to LM Power (Unstaged)	4.3-27
4.3.6.4	CSM Transfer to LM Power (Staged) - Lifeboat	4.3-28
4.3.7	LM-to-CSM Power Transfer (Unstaged) (Power Removal from CSM/LM Umbilical)	4.3-28
4.4	G&C Reference Data	4.4-2
4.4.1	LGC/DSKY Restrictions	4.4-2
4.4.2	AEA/DEDA Restrictions	4.4-5
4.4.3	Jet Select Logic	4.4-8
4.4.4	LGC Programs	4.4-10
4.4.5	LGC Routines	4.4-11
4.4.6	Verb List	4.4-12
4.4.7	Noun List	4.4-14
4.4.8	Star/Planet List	4.4-26
4.4.9	Checklist Reference Codes (V50 N25)	4.4-28
4.4.10	Option Codes (V04 N06, V04 N12 or V05 N06)	4.4-28
4.4.11	Alarm Codes (V05 N09)	4.4-29
4.4.12	AOT Detent/LPD/COAS Codes (N70, N71)	4.4-32
4.4.13	Flagwords	4.4-33
4.4.14	AGS Selector Logic	4.4-49
4.4.15	DEDA Input List	4.4-51
4.4.16	DEDA Output List	4.4-54
4.4.17	DEDA Accessible Parameters List	4.4-57
4.5	G&C Reference Modes	4.5-2
4.5.1	Attitude Control Modes	4.5-2
4.5.1.1	RCS Primary Coil Enable	4.5-2
4.5.1.2	PGNCS Automatic	4.5-2A
4.5.1.3	PGNCS Attitude Hold/Rate Command	4.5-4
4.5.1.4	PGNCS Minimum Impulse	4.5-4A
4.5.1.5	AGS Automatic	4.5-6
4.5.1.6	AGS Attitude Hold/Rate Command	4.5-8
4.5.1.7	AGS Pulse	4.5-10
4.5.1.8	AGS Direct	4.5-12
4.5.1.9	ACA Hardover	4.5-14
4.5.2	Translation Control Modes	4.5-14
4.5.2.1	Descent Engine On/Off Control	4.5-14
4.5.2.2	Ascent Engine On/Off Control	4.5-19
4.5.2.3	Descent Engine Throttle Control	4.5-22
4.5.2.4	GDA Enable	4.5-27
4.5.2.5	RCS Translation	4.5-28
4.5.3	Dynamic Display Modes	4.5-30
4.5.3.1	PGNCS Total Attitude Display	4.5-30
4.5.3.2	PGNCS Attitude Rate/Error Display	4.5-32
4.5.3.3	AGS Total Attitude Display	4.5-33
4.5.3.4	AGS Attitude Error Display	4.5-34
4.5.3.5	Attitude Rate Display	4.5-34
4.5.3.6	RR Shaft Angle/Trunnion Angle Display	4.5-35
4.5.3.7	RR Azimuth Rate/Elevation Rate Display	4.5-36
4.5.3.8	Forward Velocity/Lateral Velocity Display	4.5-36
4.5.3.9	Altitude/Altitude Rate Display	4.5-37
4.5.3.10	Range/Range Rate Display	4.5-37

TABLE OF CONTENTS (cont)

SECTION		TITLE	PAGE
4.0	NORMAL/BACKUP PROCEDURES (cont)		
	4.5.3.11	Thrust Display	4.5-38
	4.5.3.12	Radar Signal Strength Display	4.5-39
	4.5.3.13	Heater Control Temperature Monitor Display	4.5-39
	4.5.3.14	RR LOS Azimuth and Elevation Display (V85)	4.5-40
	4.6	G&C General	4.6-3
	4.6.1	PGNS	4.6-3
	4.6.1.1	LGC Power-Up	4.6-3
	4.6.1.2	LGC Power-Down Program (P06)	4.6-4
	4.6.1.3	IMU Power-Up (LGC Operating)	4.6-4
	4.6.1.4	IMU Power-Up (LGC Off)	4.6-4
	4.6.1.5	IMU Power-Down	4.6-5
	4.6.1.6	LGC Idling Program (P00)	4.6-5
	4.6.1.7	LGC Update Program (P27)	4.6-6
	4.6.1.8	DAP Data Load Routine (R03)	4.6-8
	4.6.1.9	Crew-Defined Maneuver Routine (R62)	4.6-11
	4.6.1.10	Rendezvous Final Attitude Routine (R63)	4.6-13
	4.6.1.11	Rendezvous Parameter Display Routine (R31)	4.6-16
	4.6.1.12	Show Banksum	4.6-17
	4.6.1.13	LGC Self-Test	4.6-17
	4.6.1.14	DSKY Light Test	4.6-19
	4.6.1.15	LGC/CMC Clock Synchronization Routine (R33)	4.6-20
	4.6.1.16	PIPA Bias Measurement & Loading	4.6-21
	4.6.1.17	Rate of Descent Controller/LGC Interface Check	4.6-23
	4.6.1.18	AGS Initialization Routine (R47)	4.6-23
	4.6.1.19	Preferred Tracking Attitude Program (P25)	4.6-26
	4.6.1.20	Fresh Start	4.6-29
	4.6.1.21	ICDU Zero	4.6-30
	4.6.1.22	RR CDU Zero	4.6-31
	4.6.1.23	Load IMU Attitude Error Meters	4.6-31
	4.6.1.24	Increment LGC Time	4.6-32
	4.6.1.25	Initialize Erasable Dump Via Downlink	4.6-32
	4.6.1.26	Enable W-Matrix Initialization	4.6-33
	4.6.1.27	ORDEAL Initialization	4.6-33
	4.6.1.28	LGC Erasable Memory Display/Update	4.6-35
	4.6.1.29	Restart	4.6-36
	4.6.1.30	S-Band Antenna Routine (R05)	4.6-37
	4.6.1.31	Interrupt Integration	4.6-38
	4.6.1.32	Mode I Attitude Error Display	4.6-38
	4.6.1.33	Mode II Attitude Error Display	4.6-38
	4.6.1.34	W-Matrix Error Display	4.6-39
	4.6.1.35	Move This Vehicle State Vector to Other State Vector	4.6-39
	4.6.1.36	Final Automatic Request Terminate Routine (R00)	4.6-40
	4.6.1.37	Erasable Modification Routine (R01)	4.6-41
	4.6.1.38	Input ΔRLS for Pinpoint Landing	4.6-41
	4.6.1.39	DSKY 88888 Clear	4.6-42
	4.6.2	AGS/CES	4.6-42A
	4.6.2.1	AGS Power-Up	4.6-42A
	4.6.2.2	AGS Power-Down	4.6-44
	4.6.2.3	AEA Self-Test	4.6-45
	4.6.2.4	AGS Checkout	4.6-46
	4.6.2.5	AGS Gyro & Accelerometer Calibration	4.6-46
	4.6.2.6	AGS Manual Absolute Time Initialization	4.6-49
	4.6.2.7	AGS Manual LM State Vector Update/Initialization	4.6-50
	4.6.2.8	Load AGS Contingency LM Lunar Touchdown State Vector	4.6-51
	4.6.2.9	AGS Manual CSM State Vector Update/Initialization	4.6-52
	4.6.2.10	Deleted	4.6-53
	4.6.2.11	Rate Gyro Check	4.6-54
	4.6.2.12	AEA Readiness Check	4.6-55
	4.6.2.13	AGS Orientation to Initial Computed Steering Attitude	4.6-56
	4.6.2.14	AGS Accelerometer Calibration	4.6-58
	4.6.2.15	AGS Wb Vector Update	4.6-59
	4.6.2.16	AGS Lunar Surface Gyro Calibration	4.6-60
	4.6.2.17	AGS Lunar Azimuth Store	4.6-61

TABLE OF CONTENTS (cont)

SECTION	TITLE	PAGE
4.0	NORMAL/BACKUP PROCEDURES (cont)	
4.6.2.18	AGS Rescaling From Lunar to Earth Mission	4.6-61
4.6.2.19	AGS Power-Up From AGS Partial Power-Down	4.6-63
4.6.2.20	AGS Partial Power-Down	4.6-63
4.6.3	Radar	4.6-64
4.6.3.1	Rendezvous Radar Power-Up	4.6-64
4.6.3.2	Rendezvous Radar Initial Activation & Checkout	4.6-64A
4.6.3.3	Rendezvous Radar Coarse Align	4.6-69
4.6.3.4	Rendezvous Radar Manual Designation to Mode II	4.6-70
4.6.3.5	Rendezvous Radar Manual Side-Lobe Acquisition Check & Main-Lobe Acquisition Verification	4.6-71
4.6.3.6	Terminate Rendezvous Radar Continuous Designate	4.6-79
4.6.3.7	Landing Radar Power-Up	4.6-79
4.6.3.8	Landing Radar Checkout	4.6-80
4.6.3.9	Command Landing Radar to Position 2	4.6-82
4.6.3.10	Landing Radar Spurious Test Routine (R77)	4.6-82
4.6.3.11	Landing Radar Power-Down	4.6-83
4.7	Prethrust	4.7-2
4.7.1	PGNCS/AGS	4.7-2
4.7.1.1	External ΔV (LGC P30, AEA 410+50000)	4.7-2
4.7.1.2	Coelliptic Sequence Initiation (LGC P32, AEA (410+10000)	4.7-7
4.7.1.3	Constant Δ Altitude (LGC P33, AEA 410+20000)	4.7-14
4.7.1.4	Transfer Phase Initiation (LGC P34, AEA 410+30000, Search; & 410+40000, Execute)	4.7-20
4.7.1.5	Transfer Phase Midcourse (LGC P35, AEA 410+40000)	4.7-28
4.7.2	PGNCS	4.7-32
4.7.2.1	Rendezvous Out-Of-Plane Display Routine (R36)	4.7-32
4.7.2.2	Target ΔV Program (CSM) (P76)	4.7-33
4.7.2.3	Target ΔV Program (LM) (P77)	4.7-34
4.7.3	AGS	4.7-34A
4.7.3.1	AGS Out-Of-Plane Maneuver	4.7-34A
4.7.3.2	AGS Orbit Insertion	4.7-36
4.7.4	CSM Backup	4.7-38
4.7.4.1	CSM Coelliptic Sequence Initiation Targeting Program (P72)	4.7-38
4.7.4.2	CSM Constant Δ Altitude Targeting Program (P73)	4.7-41
4.7.4.3	CSM Transfer Phase Initiation Targeting Program (P74)	4.7-43
4.7.4.4	CSM Transfer Phase Midcourse Targeting Program (P75)	4.7-46
4.8	Navigation	4.8-2
4.8.1	Orbital Navigation	4.8-2
4.8.1.1	Ground Track Determination Program (P21)	4.8-2
4.8.1.2	Orbit Parameter Display (PGNCS R30 & AGS)	4.8-3
4.8.2	LM Rendezvous Navigation	4.8-6
4.8.2.1	LM Rendezvous Navigation Program (P20)	4.8-6
4.8.2.2	AGS Manual Rendezvous Radar LM State Vector Update	4.8-19
4.8.2.3	AGS Automatic Rendezvous Radar LM State Vector Update (Raw Data Transfer Via LGC)	4.8-22
4.8.3	Lunar Surface Navigation	4.8-22B
4.8.3.1	Lunar Surface Navigation Program (P22)	4.8-22B

TABLE OF CONTENTS (cont)

SECTION		TITLE	PAGE
4.0	NORMAL/BACKUP PROCEDURES (cont)		
	4.9	Alignment	4.9.2
	4.9.1	PGNCS	4.9-2
	4.9.1.1	IMU Orientation Determination Program (P51)	4.9-2
	4.9.1.2	IMU Realign Program (P52)	4.9-5
	4.9.1.3	ISS Coarse Align	4.9-14
	4.9.1.4	Torque Gyros	4.9-14A
	4.9.1.5	Docked Manual IMU Coarse Alignment	4.9-16
	4.9.1.6	Crescent Alignment of PGNCS (IMU)	4.9-16A
	4.9.1.7	LM IMU Alignment to CSM Gyro Display Coupler (GDC)	4.9-16C
	4.9.2	AGS	4.9-17
	4.9.2.1	PGNCS/AGS Align	4.9-17
	4.9.2.2	Backup AGS Alignment (Using AGS Body-Axis Alignment and PGNS IMU)	4.9-19
	4.9.2.3	Backup AGS Alignment (Using AGS Body-Axis Alignment and AOT)	4.9-20
	4.9.2.4	Crescent Alignment to AGS (ASA)	4.9-22
	4.9.2.5	AGS Alignment of CSM Gyro Display Coupler or CSM Primary System	4.9-22A
	4.9.3	Lunar Surface Alignment	4.9-22B
	4.9.3.1	PGNCS Lunar Surface Align Program (P57)	4.9-22B
	4.9.3.2	AGS Lunar Align (400+40000)	4.9-29
	4.10	Thrust	4.10-2
	4.10.1	Orbital Thrust	4.10-2
	4.10.1.1	DPS Thrust Program (P40) With AGS Followup/In Control	4.10-2
	4.10.1.2	APS Thrust Program (P42) With AGS Followup/In Control	4.10-22
	4.10.1.3	RCS Thrust Program (P41) With AGS Followup/In Control	4.10-38
	4.10.1.4	Thrust Monitor Program (P47)	4.10-49
	4.10.1.5	AGS RCS Axis-by-Axis Thrust	4.10-51
	4.10.1.6	RCS Burn for Lunar Impact (Unmanned Ascent Stage)	4.10-53
	4.10.1.7	Docked DPS Thrust Program (P40) With AGS Followup	4.10-61
	4.10.2	Powered Descent	4.10-73
	4.10.2.1	Braking Phase Program (P63) With AGS Preparation for Orbit Insertion (410+00000)	4.10-73
	4.10.2.2	Approach Phase Program (P64)	4.10-86
	4.10.2.3	Landing Phase (ROD) Program (P66)	4.10-88
	4.10.2.4	Landing Confirmation Program (P68)	4.10-91
	4.10.3	Powered Ascent	4.10-92
	4.10.3.1	Powered Ascent Program (P12) With AGS Followup/In Control	4.10-92
	4.10.3.2	DPS Abort (LGC, P70, AEA 410+00000)	4.10-106
	4.10.3.3	APS Abort (P71, AEA 410+00000)	4.10-116
	4.11	Undocking & Docking	4.11-2
	4.11.1	LM Undocking From CSM	4.11-2
	4.11.2	LM Docking	4.11-6
	4.12	Staging	4.12-2
	4.12.1	DPS Propellant Tank Venting	4.12-2
	4.12.2	DPS Supercritical He Venting (Lunar Surface Only)	4.12-2A
	4.12.3	APS Pressurization & Checkout	4.12-3
	4.12.4	APS Pressurization & Checkout (Alternate)	4.12-4
	4.12.5	EPS Prestaging Check	4.12-6
	4.12.6	ED Prestaging Check	4.12-8
	4.12.7	ECS Prestaging Check	4.12-8
	4.12.8	EPS Postaging Check	4.12-8
	4.12.9	RCS Staging	4.12-9
	4.12.10	AGS FITH	4.12-14

TABLE OF CONTENTS (cont)

SECTION	TITLE	PAGE
4.0	NORMAL/BACKUP PROCEDURES (cont)	
4.13	Subsystem Management	4.13-3
4.13.1	ECS	4.13-3
4.13.1.1	ECS Basic (Unstaged & Staged)	4.13-3
4.13.1.2	ECS Periodic Monitoring (Unstaged)	4.13-5
4.13.1.3	ECS Periodic Monitoring (Staged)	4.13-7
4.13.1.4	Secondary Coolant Loop (HTS) Activation	4.13-8
4.13.1.5	Primary LiOH Cartridge Replacement	4.13-9
4.13.1.6	Secondary LiOH Cartridge Replacement	4.13-10
4.13.1.7	Cabin Depressurization	4.13-11
4.13.1.8	Cabin Repressurization	4.13-13
4.13.1.9	Cabin Leak Check	4.13-14
4.13.1.10	LCG Recharge	4.13-14
4.13.1.11	Reverse O2 Umbilicals for PGA Cooling	4.13-15
4.13.1.12	H2O Dispenser Activation	4.13-16
4.13.1.13	Cabin Atmosphere Filtering	4.13-17
4.13.2	Communications	4.13-17
4.13.2.1	Communications Basic	4.13-17
4.13.2.2	S-Band Configuration for LOS	4.13-19
4.13.2.3	Relay Mode: EVA (Two-Man EVA)	4.13-20
4.13.2.4	Relay Mode: EVA (One-Man EVA)	4.13-21
4.13.2.5	Relay Mode: CSM Voice to MSFN	4.13-22
4.13.2.6	VHF B Data Enable	4.13-23
4.13.2.7	S-Band LBR Data Enable	4.13-23
4.13.2.8	S-Band CWEA Enable	4.13-23
4.13.2.9	DSEA Check	4.13-23
4.13.2.10	VHF Ranging Check	4.13-24
4.13.2.11	DUA Enable	4.13-25
4.13.2.12	DUA Disable	4.13-25
4.13.2.13	DUA Backup Voice Enable	4.13-26
4.13.2.14	DUA Backup Voice Disable	4.13-26
4.13.2.15	S-Band Antenna Cooldown	4.13-26
4.13.2.16	S-Band Operation in PTC Mode	4.13-26
4.13.3	Propulsion	4.13-28
4.13.3.1	MPS Basic (Unstaged)	4.13-28
4.13.3.2	MPS Basic (Staged)	4.13-28
4.13.3.3	APS/RCS Propellant Interconnect	4.13-29
4.13.3.4	DPS Periodic Monitoring	4.13-30
4.13.3.5	APS Periodic Monitoring	4.13-31
4.13.3.6	RCS Periodic Monitoring	4.13-34
4.13.4	EPS	4.13-35
4.13.4.1	EPS Basic (Unstaged)	4.13-35
4.13.4.2	EPS Basic (Staged)	4.13-36
4.13.4.3	EPS Preparation for DPS Burn	4.13-36
4.13.4.4	EPS Check, Post-DPS Burn	4.13-38
4.13.4.5	EPS Periodic Monitoring (Unstaged)	4.13-38
4.13.4.6	EPS Periodic Monitoring (Staged)	4.13-40
4.13.4.7	LCA Duty Cycle During Secondary Coolant Loop Operation	4.13-40
4.13.4.8	Lunar Stay Battery Management	4.13-41
4.13.5	Heaters Status Check	4.13-44
4.13.6	Set Event Timer	4.13-44
4.13.7	Waste Management	4.13-44
4.13.7.1	Transfer Urine to D/S Waste Container (Prime Mode)	4.13-45
4.13.7.2	Transfer Urine to D/S Waste Container (Alternative Mode)	4.13-46
4.13.7.3	Transfer Urine to Small Urine Collection Assembly	4.13-47
4.13.7.4	Emesis Disposal	4.13-48
4.13.7.5	Deleted	4.13-49/4.13-50
4.13.7.6	Defecation Disposal	4.13-49/4.13-50
4.13.8	Installation of 16-MM Sequence Camera Wedge	4.13-49/4.13-50
4.13.9	Window Shades (CDR, LMP, & Docking)	4.13-51/4.13-52

TABLE OF CONTENTS (cont)

SECTION		TITLE	PAGE
4.0	NORMAL/BACKUP PROCEDURES (cont)		
	4.13.9.1	Deploy Shades	4.13-51/4.13-52
	4.13.9.2	Stow Shades	4.13-51/4.13-52
	4.13.10	Crash Bar Deployment	4.13-51/4.13-52
	4.13.10.1	Unstow Crash Bar	4.13-51/4.13-52
	4.13.10.2	Stow Crash Bar	4.13-51/4.13-52
	4.14	Intravehicular Operations	4.14-2
	4.14.1	Initial Intravehicular Transfer to LM	4.14-2
	4.14.2	Intravehicular Transfer to LM (Second Crewman)	4.14-3
	4.14.3	Prepare for LM-to-CSM Transfer	4.14-3
	4.14.4	Intravehicular Transfer to CSM	4.14-5
	4.14.5	Enable LM Cabin Repressurization System	4.14-5
	4.14.6	Disable LM Cabin Repressurization System	4.14-6
	4.14.7	Connect to LM ECS & Communications	4.14-6
	4.14.8	Disconnect From LM ECS & Communications	4.14-8
	4.14.9	Open Overhead Hatch (LM Side)	4.14-9
	4.14.10	Open Overhead Hatch (CSM Side)	4.14-9
	4.14.11	Close Overhead Hatch (LM Side)	4.14-10
	4.14.12	Close Overhead Hatch (CSM Side)	4.14-10
	4.14.13	Install Drogue (LM Side)	4.14-10
	4.14.14	Install Drogue (CSM Side)	4.14-11
	4.14.15	Remove Drogue (LM Side)	4.14-11
	4.14.16	Remove Drogue (CSM Side)	4.14-12
	4.14.17	Tunnel Pressure Equalization From LM	4.14-12
	4.14.18	Tunnel Pressurization From LM, Without Using LM Consumables	4.14-12
	4.14.19	Tunnel Pressurization From LM, Using LM Consumables	4.14-13
	4.14.20	Vacuum Brush Operation	4.14-14
	4.15	Lunar Stay Operations	4.15-2
	4.15.1	Cabin Operations	4.15-2
	4.15.1.1	EPS Check, Post-Lunar-Landing	4.15-2
	4.15.1.2	Lunar Stay Subsystems Check	4.15-3
	4.15.1.3	Open Forward Hatch (Cabin Side)	4.15-13
	4.15.1.4	Open Forward Hatch (Outside)	4.15-13
	4.15.1.5	Close Forward Hatch (Cabin Side)	4.15-13
	4.15.1.6	Close Forward Hatch (Outside)	4.15-14
	4.15.1.7	ARS Purge (EVA Preparation)	4.15-14
	4.15.1.8	Subsystem Configuration for EVA Preparation	4.15-15
	4.15.1.9	PLSS/EVCS Electrical Checkout, Two-Man EVA	4.15-17
	4.15.1.10	PLSS/EVCS Electrical Checkout, One-Man EVA	4.15-20
	4.15.1.11	Final Subsystems Configuration for Egress	4.15-23
	4.15.1.12	ECS Status (Two Men on Lunar Surface)	4.15-24
	4.15.1.13	Post-EVA Final Subsystems Configuration	4.15-26A
	4.15.1.14	Cooling H20 Changeover, PLSS H20 to LM H20 (LCG)	4.15-28
	4.15.1.15	Cooling H20 Changeover, LM H20 (LCG) to PLSS H20	4.15-28
	4.15.1.16	PLSS Recharge	4.15-28
	4.15.1.16.1	Oxygen Recharge	4.15-28
	4.15.1.16.2	Feedwater Reservoir and Auxiliary Tank Recharge, Gravity Environment	4.15-29
	4.15.1.17	Raise EVA Antenna	4.15-32
	4.15.1.18	Stow EVA Antenna	4.15-32
	4.15.1.19	Sleep Station	4.15-32
	4.15.1.19.1	Deploy Sleep Station	4.15-32
	4.15.1.19.2	Stow Sleep Station	4.15-33
	4.15.1.20	Buddy Umbilical Stowage Bag Removal	4.15-34
	4.15.1.21	PGA Protective Stowage	4.15-34

TABLE OF CONTENTS (cont)

SECTION	TITLE	PAGE
4.0	NORMAL/BACKUP PROCEDURES (cont)	
4.15.2	Extravehicular Activity	4.15-34
4.15.2.1	MESA Operations	4.15-34
4.15.2.1.1	MESA Remote Deployment	4.15-34
4.15.2.1.2	MESA Manual Deployment	4.15-35
4.15.2.1.3	MESA Height Adjustment	4.15-35
4.15.2.1.4	MESA Exterior Blanket Removal	4.15-35
4.15.2.1.5	TV Camera Deployment	4.15-36
4.15.2.1.6	MESA Equipment Handling and Transfer	4.15-36
4.15.2.1.7	SRC Removal	4.15-37
4.15.2.2	LRV Deployment	4.15-37
4.15.2.3	ALSEP Operations	4.15-37
4.15.2.3.1	Open Scientific Equipment (SEQ) Bay	4.15-37
4.15.2.3.2	Pallet Assembly Remote Deployment	4.15-38
4.15.2.3.3	Pallet Assembly Manual Deployment	4.15-39
4.15.2.3.4	Pallet Assembly Manual Deployment in Low Attitude	4.15-40
4.15.2.3.5	Removal of RTG Fuel Element	4.15-41
4.15.2.4	Deleted	4.15-42
4.15.2.5	TV Camera Operation	4.15-42
4.15.2.6	Lunar Launch Contingency Stowage	4.15-42
5.0	CONTINGENCY PROCEDURES	
5.1	Abort Procedures	5.1-1
5.2	Malfunction Procedures	5.2-2
5.2.1	Guidance & Control Flight Displays	5.2-3
5.2.2	Primary Guidance & Navigation Section	5.2-7
5.2.3	Abort Guidance Section	5.2-13
5.2.4	Control Electronics Section	5.2-15
5.2.5	Descent Propulsion Section	5.2-23
5.2.6	Ascent Propulsion Section	5.2-27
5.2.7	Reaction Control Subsystem	5.2-31
5.2.8	Electrical Power Subsystem	5.2-35
5.2.9	Communications Subsystem	5.2-43
5.2.10	Environmental Control Subsystem	5.2-49
5.2.11	Explosive Devices	5.2-57
5.2.12	Heaters	5.2-61
5.3	Emergency Procedures	5.3-2
5.3.1	Excessive Cabin Leak	5.3-2
5.3.2	Fire/Smoke in Cabin (Not in suit loop)	5.3-3
5.3.3	Fire/Smoke in suit loop	5.3-3
5.3.4	Suit Leak in Depressurized Cabin	5.3-4
5.3.5	Vacuum Changeover - PLSS to LM	5.3-5
5.3.6	Crewman Vacuum Transfer to CSM	5.3-6
5.3.7	Emergency Transfer, Using OPS	5.3-7
5.3.8	Emergency Forward Hatch Opening (Cabin Side)	5.3-8
5.3.9	Contaminants In ARS/Cabin Atmosphere	5.3-8
5.3.10	Smoke In Cabin (Crew Unsuited)	5.3-9
5.3.11	Loss of Descent Power	5.3-11
5.3.12	Loss of CDR Bus During Powered Descent	5.3-11
5.3.12.1	To Abort (DPS Engine)	5.3-11
5.3.12.2	To Abort (APS Engine)	5.3-12
5.3.12.3	Reconfigure	5.3-13
5.3.13	Loss of LMP Bus During Powered Descent	5.3-13
5.3.13.1	To Abort (DPS Engine)	5.3-13
5.3.13.2	To Abort (APS Engine)	5.3-14
5.3.13.3	Reconfigure	5.3-14
5.3.14	Extravehicular Transfer (Staged Vehicle)	5.3-15
5.3.14.1	Subsystem Preparation for Egress	5.3-15
5.3.14.2	Final Subsystem Preparation for EVT	5.3-16

TABLE OF CONTENTS (cont)

SECTION		TITLE	PAGE
5.0	CONTINGENCY PROCEDURES (cont)		
	5.4	Contingency Management Procedures	5.4-2
	5.4.1	EPS Prestaging Check - Lunar Contingency (One Ascent Battery only)	5.4-2
	5.4.2	PLSS Makeup to LM Suit Loop via PGA Interface	5.4-3
	5.4.3	PLSS O2 Transfer to LM Suit Loop via Manifold	5.4-4
	5.4.4	PLSS H2O Transfer to LM Sublimator	5.4-4
	5.4.5	ARS Configuration for use of CM LiOH Cartridges	5.4-5
	5.4.6	AGS Passive Thermal Control (PTC) for LM/CM Configuration	5.4-6
	5.4.7	AGS Passive Thermal Control (PTC) for LM/CSM Configuration	5.4-8
	5.4.8	PGNCS Passive Thermal Control (PTC) for LM/CSM Configuration	5.4-9
	5.4.9	LM Staging While Docked with CM only	5.4-11
	5.4.10	LM/LGC-Controlled Spin Stabilization of CM	5.4-13
	5.4.11	LM/AGS-Controlled Spin Stabilization of CM	5.4-14
	5.4.12	Minimizing DPS Supercritical Helium Pressure Rise at Start of Burn	5.4-15
	5.4.12A	DPS Supercritical Helium Venting (Zero G, Docked Only)	5.4-16
	5.4.13	Deleted	
	5.4.14	DPS Supercritical Helium Vent During a Burn	5.4-17
	5.4.15	Loss of Both Ascent H2O Tanks	5.4-19
	5.4.16	Loss of Both Ascent O2 Tanks	5.4-20
	5.4.17	Loss of Both Press Regs (Failed Closed)	5.4-21
	5.4.18	Loss of Both Suit Fans	5.4-22
	5.4.19	Optimization of APS Helium Manifold Leak	5.4-23
	5.4.20	Ascent Stage Oxygen Tank Bleed-Down Procedure	5.4-24A
	5.4.21	Ascent Stage Oxygen Tank Top-Off Procedure	5.4-24B
	5.4.22	Descent O2 Venting	5.4-24B
	5.4-23	Loss of Manual and Auto APS Start Capability	5.4-25
	5.4-24	Loss of Manual and Auto APS Start Capability (with loss of one bus)	5.4-31
	5.4-25	Loss of ED Sub-system	5.4-35

TABLE OF CONTENTS (cont)

SECTION	TITLE	PAGE

NOTE

Appendixes A, B, and C are in Apollo Operations Handbook, Volume I.

APPENDIX

D	Definitions of Symbols and Abbreviations	D-1
E	Controls and Displays	E-1
F	Alphabetical Index	F-1

LIST OF TABLES

TABLE	TITLE	PAGE
4-1	RCS Jet Select Logic	4.4-8
4-2	Communications Modes	4.13-27
5-1	G&C FLT DISP Procedure Entry Sheet	5.2-3
5-2	PGNS Procedure Entry Sheet	5.2-7
5-3	AGS Procedure Entry Sheet	5.2-13
5-4	CES Procedure Entry Sheet	5.2-15
5-5	DPS Procedure Entry Sheet	5.2-23
5-6	APS Procedure Entry Sheet	5.2-27
5-7	RCS Procedure Entry Sheet	5.2-31
5-8	EPS Procedure Entry Sheet	5.2-35
5-9	CS Procedure Entry Sheet	5.2-43
5-10	ECS Procedure Entry Sheet	5.2-49
5-11	ED Procedure Entry Sheet	5.2-57
5-12	HTR Procedure Entry Sheet	5.2-61
D-1	Definition of Symbols and Abbreviations	D-1

LIST OF ILLUSTRATIONS

FIGURE	TITLE	PAGE
4-1	Prelaunch Closeout Check (Panel 11)	4.1-3
4-2	Prelaunch Closeout Check (Panel 16)	4.1-8
4-3	Initial Entry Status Check (Panel 11)	4.2-3
4-4	Initial Entry Status Check (Panel 16)	4.2-4
4-5	Circuit Breaker Activation (Panel 11)	4.2-13
4-6	Circuit Breaker Activation (Panel 16)	4.2-15
4-7	S-Band Steerable Antenna Vehicle Blockage Diagram (Relative to RF Boresight)	4.2-39
4-8	Ascent Helium Loading	4.2-51
4-9	Descent Ambient Helium Bottle Loading	4.2-52
4-10	Theoretical Supercritical Helium Prepressurization	4.2-53
4-11	RCS Theoretical Helium Bottle Loading Envelope, Pressure vs Temperature	4.2-55
4-12	Preparation For Sublimator Dryout (Panel 11)	4.3-9
4-13	Preparation For Sublimator Dryout (Panel 16)	4.3-11
4-14	Sublimator Dryout Time Required vs Initial Inlet Temperature	4.3-13
4-15	Final Subsystem Deactivation, Panel 11 (Sheet 1 of 4)	4.3-14
4-15	Final Subsystem Deactivation, Panel 16 (Sheet 2 of 4)	4.3-16
4-15	Final Subsystem Deactivation, Panel 11 (Sheet 3 of 4)	4.3-19
4-15	Final Subsystem Deactivation, Panel 16 (Sheet 4 of 4)	4.3-20
4-16	RCS Thruster Geometry	4.4-7
4-17	Nomogram for Interpretation of Rendezvous Radar AGC (Normalized to -109 dbm 400 nm)	4.6-74
4-18	Test Data, Designation Loci to Stable Tracking Angles	4.6-75
4-19	Test Data, AGC Signal Surface at Close Range (< 4 nm)	4.6-76
4-20	Test Data, Rendezvous Radar Shaft Traverses at Fixed Trunnion Values	4.6-77

LIST OF ILLUSTRATIONS (cont)

FIGURE	TITLE	PAGE
4-21	Test Data, Rendezvous Radar Trunnion Traverses at Fixed Shaft Values	4.6-78
4-22	RCS Burn For Lunar Impact (Panel 11)	4.10-58
4-23	RCS Burn For Lunar Impact (Panel 16)	4.10-60
4-24	Predicted APS Helium Tank Temperature During Burn	4.13-32
4-25	Predicted APS Helium Tank Pressure During Burn	4.13-33
4-26	Lunar Stay Subsystems Check (Panel 11)	4.15-5
4-27	Lunar Stay Subsystems Check (Panel 16)	4.15-11
5-1	Supplemental Carbon Dioxide Removal System	5.4-7
E-1	Cabin Controls and Displays	E-3
E-2	ECS Aft Bulkhead Controls	E-5

Change No.	Date Change Incorporated	Page No. Affected	Para No. Affected	Step No. Affected
96	7-1-71	5.2-23	5.2.5.2.3	
97	9-26-71	5.2-40	Symptom 5	
98	9-26-71	5.2-39	Symptom 3	
99	9-26-71	5.2-60	Symptom 4	
961	7-1-71	4.3-11	Fig 4-13	
962	7-1-71	4.3-16	Fig 4-15	Sht 2 of 4
969	7-1-71	4.3-19	Fig 4-15	Sht 3 of 4
971	7-1-71	4.3-22	4.3.4.1	7
979A	7-1-71	4.9-7 4.9-8 4.9-12 4.9-13	4.9.1.2 4.9.1.2 4.9.1.2 4.9.1.2	9 11 20 thru 36 20 thru 36
980	7-1-71	4.3-26	4.3.6.2	4
981A	7-1-71	5.2-4	Symptom 1	
983	7-1-71	4.8-22b	4.8.2.3	5
986A	7-1-71	5.2-39 5.2-41	Symptom 5 Symptom 7	
987A	7-1-71	5.2-60	Symptom 4a Symptom 4b	
988A	7-1-71	5.2-58	Symptom 1	
989	7-1-71	5.2-59	Symptom 3	
990	7-1-71	5.2-58	Symptom 2	
992	7-1-71	4.12-6 4.13-36 4.13-36 5.2-36 5.2-37 5.2-38	4.12.5 4.13.4.2 4.13.4.2 Symptom 1 Symptom 1 Symptom 2	1 1 2
993	7-1-71	5.2-42	SSR-1	
994	7-1-71	4.15-29 4.15-30	4.15.1.16.2 4.15.1.16.2	 8
996	7-1-71	5.2-37 5.2-38	Symptom 1 Unstaged Symptom 2	
997A	7-1-71	5.2-39	Symptom 3	
998A	7-1-71	5.2-42	SSR-1	

Change No.	Date Change Incorporated	Page No. Affected	Para No. Affected	Step No. Affected
999	7-1-71	4.6-24	4.6.1.18	1
		4.3-36	4.6.1.29	1
		4.8-19	4.8.2.1	21
		4.10-27	4.10.1.2	5
		4.10-81	4.10.2.1	1b
1580	7-1-71	4.10-34	4.10.1.2	12
1581	7-1-71	4.4-49	4.4.14	Add. 411
		4.4-50	4.4.14	Add. 415
		4.4-50	4.4.14	Add. 417
1582	7-1-71	4.4-51	4.4.15	Add. 223
		4.4-52	4.4.15	Add. 306
		4.4-52	4.4.15	Add. 310
		4.4-53	4.4.15	Add. 377
1583	7-1-71	4.4-54	4.4.16	Add. 263
		4.4-54	4.4.16	Add. 270
		4.4-54	4.4.16	Add. 303
		4.4-54	4.4.16	Add. 310
		4.4-55	4.4.16	Add. 312
		4.4-55	4.4.16	Add. 347
		4.4-55	4.4.16	Add. 371
				Add. 372
				Add. 377
		4.4-55	4.4.16	Add. 402
		4.4-56	4.4.16	Add. 470
		4.4-56	4.4.16	Add. 471
		4.4-56	4.4.16	Add. 472
		4.4-56	4.4.16	Add. 544
		4.4-56	4.4.16	Add. 545
		4.4-56	4.4.16	Add. 546
		4.4-56	4.4.16	Add. 621
1584	7-1-71	4.4-57	4.4.17	Add. 034
				Add. 054
				Add. 055
				Add. 056
		4.4-58	4.4.17	Add. 147
		4.4-54	4.4.17	Add. 157
				Add. 174
				Add. 175
				Add. 176
		4.4-60	4.4.17	Add. 227
				Add. 254
				Add. 271
				Add. 272
				Add. 274
		4.4-61	4.4.17	Add. 303
				Add. 305
				Add. 310
				Add. 316
		4.4-61	4.4.17	Add. 317
				Add. 347
				Add. 360
				Add. 361
				Add. 362
				Add. 364
				Add. 365

Change No.	Date Change Incorporated	Page No. Affected	Para No. Affected	Step No. Affected
1584	7-1-71	4.4-62	4.4.17	Add. 366
				Add. 371
		4.4-62	4.4.17	Add. 407
				Add. 411
				Add. 415
				Add. 415
		4.4-62A/4.4-62B	4.4.17	Add. 446
		4.4-63	4.4.17	Add. 463
				Add. 465
				Add. 470
				Add. 471
		4.4-63	4.4.17	Add. 472
				Add. 477
				Add. 500
				Add. 501
				Add. 502
				Add. 503
				Add. 514
				Add. 515
				Add. 516
		4.4-63	4.4.17	Add. 517
		4.4-64	4.4.17	Add. 522
				Add. 523
				Add. 527
				Add. 526
				Add. 544
				Add. 545
				Add. 546
				Add. 554
		4.4-64	4.4.17	Add. 555
				Add. 556
				Add. 560
		4.4-65	4.4.17	Add. 561
				Add. 563
				Add. 564
				Add. 565
				Add. 566
				Add. 571
		4.4-65	4.4.17	Add. 576
				Add. 577
				Add. 600
				Add. 601
				Add. 602
				Add. 606
				Add. 607
				Add. 610
				Add. 611
		4.4-65	4.4.17	Add. 612
				Add. 613
		4.4-66	4.4.17	Add. 614
				Add. 616
				Add. 621
				Add. 622
				Add. 644
				Add. 645
				Add. 646
		4.4-66	4.4.17	Add. 647
			4.4.17	Add. 650

Change No.	Date Change Incorporated	Page No. Affected	Para No. Affected	Step No. Affected
1584	7-1-71	4.4-67/4.4-68	4.4.17	Add. 651
				Add. 652
				Add. 653
				Add. 656
				Add. 657
				Add. 665
		4.4-67/4.4-68	4.4.17	Add. 662
				Add. 700
				Add. 701
				Add. 702
				Add. 703
				Add. 704
1586	7-1-71	4.4-15	4.4.7	No. 06
				No. 07
				No. 41
1587	7-1-71	4.4-29	4.4.11	00107
				00114
		4.4-30	4.4.11	00514M, P
1588	7-1-71	4.4-35	4.4.13	Bit 4
		4.4-44	4.4.13	Bit 4
		4.4-45	4.4.13	Bit 2
		4.4-45	4.4.13	Bit 1
		4.4-47	4.4.13	Bit 10
			4.4.13	Bit 9
			4.4.13	Bit 15
		4.4-48	4.4.13	Bit 14
				Bit 13
				Bit 12
				Bit 11
				Bit 10
				Bit 9
				Bit 8
				Bit 7
				Bit 6
				Bit 5
				Bit 4
		4.4-49	4.4.13	Bit 3
				Bit 2
				Bit 1
1589	7-1-71	4.4-28	4.4.9	00016
1590	7-1-71	4.10-54A	4.10.1.6	2A
1591	7-1-71	4.4-6	4.4.2	q
1592	7-1-71	4.10-109	4.10.3.2	-
1593	7-1-71	4.8-15	4.8.2.1	15
1594	7-1-71	4.10-88	4.10.2.3	-
1595	7-1-71	4.8-7	4.8.2.1	1
		4.8-23	4.8.3.1	1
1596	7-1-71	4.10-14	4.10.1.1	12a
		4.10-32	4.10.1.2	9a
		4.10-81	4.10.2.1	16

Change No.	Date Change Incorporated	Page No. Affected	Para No. Affected	Step No. Affected
1597	7-1-71	4.4-19	4.4.7	-
1599	7-1-71	4.4-4	4.4.1	ac
1600	7-1-71	4.4-3	4.4.1	v
1601	7-1-71	4.4-5	4.4.1	ap
1602	7-1-71	4.6-41	4.6.1.37	1
1604	9-26-71	5.2-58	Symptom 1	
1605	9-26-71	4.13-45	4.13.7.1	3
		4.13-46	4.13.7.1	8, 10
1606	9-26-71	5.2-31	5.2.7.2.2	-
		5.3-10A/10B	5.3.10	-
		5.4-5	5.4.5	-
		5.4-6	5.4.6	-
		4.6-19	4.6.1.14	2
		4.6-20	4.6.1.14	3
		4.8-19	4.8.2.2	-
		4.8-25	4.8.3.1	8
		4.10-72	4.10.1.7	30
		4.10-118	4.10.3.3	1
		4.10-120	4.10.3.3	4
		4.10-123	4.10.3.3	12
		5.2-15	5.2.4.1	-
1607	9-26-71	4.4-55	4.4.16	Add. 317
		4.8-22B	4.8.2.3	5b
1608	9-26-71	5.2-17/5.2-18	Symptom 4	
2001	7-1-71	5.2-50A/5.2-50B	Symptom 2 & 2A	
		5.2-51	Symptom 3	
		5.2-52	Symptom 4	
		5.2-53	Symptom 6	
2002	7-1-71	5.2-54	Symptom 7	
2003	7-1-71	5.2-53	Symptom 6	
2004	7-1-71	5.3-9	5.3.10	
		5.3-10	5.3.10	
2005	7-1-71	5.2-24	Symptom 1	
2006A	7-1-71	5.2-53	Symptom 3	
2007	7-1-71	4.15-27	4.15.1.13	1
2008A	7-1-71	5.2-50	Symptom 1	
		5.2-50A/5.2-50B	Symptom 2 & 2A	
2009	7-1-71	5.2-58	Symptom 1	
2010	7-1-71	4.2-12	4.2.4	7
		4.2-15	Fig 4-6	-

Change No.	Date Change Incorporated	Page No. Affected	Para No. Affected	Step No. Affected
2011	7-1-71	4.1-5	4.1	7
		4.1-7	4.1	12
2012	7-1-71	4.2-58	4.2.31	3
2013	7-1-71	4.6-54	4.6.2.11	2,3
		4.6-55	4.6.2.11	3
2014	7-1-71	4.10-76	4.10.2.1	4
2015	7-1-71	5.2-36	Symptom 1	-
2016	7-1-71	5.2-36A	Symptom 1	-
2017	9-26-71	5.2-40	Symptom 5	-
2018	9026-71	4.13-14	4.13.1.10	2 thru 6
		4.13-15	4.13-1.10	7 thru 21
2019	7-1-71	4.6-18A/4.6-18B	4.6.1.13	7
2020A	9-26-71	5.4-15	5.4.12	1 thru 6
		5.4-16	5.4.12A	5 thru 10
		5.4-16A/16B	5.4.13	1 thru 6
		5.4-17	5.4.14	1 thru 18
2021	9-26-71	5.2-39	Symptom 3	-
2022A	9-26-71	5.2-36B	Symptom 1	
2023	9-26-71	5.2-38	Symptom 2	
2024	9-26-71	5.2-39	Symptom 3	
2025	9-26-71	5.2-36B	Symptom 1	
		5.2-36A	Symptom 1	
		5.2-37	Symptom 1	
2030	9-26-71	5.2-51	Symptom 3	
2031	9-26-71	5.3-11	5.3.12.1	6
		5.3-12	5.3.12.1	7A
		5.3-12	5.3.12.1	8
3158	7-1-71	4.6-13	4.6.1.9	6
		4.6-15	4.6.1.10	7
		4.6-28	4.6.1.19	5
		4.6-9	4.8.2.1	5
		4.8-12	4.8.2.1	10
		4.8-15	4.8.2.1	14
		4.8-18	4.8.2.1	19
		4.9-10	4.9.1.2	16
		4.9-11	4.9.1.2	16
		4.10-11	4.10.1.1	8
		4.10-29	4.10.1.2	7
		4.10-45	4.10.1.3	6
		4.10-66	4.10.1.7	8
		4.10-80	4.10.2.1	13
3166A	7-1-71	4.9-8	4.9.1.2	11
		4.9-12	4.9.1.2	19
		4.9-12	4.9.1.2	20

Change No.	Date Change Incorporated	Page No. Affected	Para No. Affected	Step No. Affected
3181A	7-1-71	4.8-22	4.8.2.3	1, 2, 3, 4, 5
3191	7-1-71	4.3-26	4.3.6.3	1, 2, 3, 4, 5, 6
3193	7-1-71	4.13-22	4.13.2.4	4
		4.15-20	4.15.1.9	35
		4.15-22	4.15.1.10	25
		4.15.42	4.15.2.4	42
3196	7-1-71	4.10-54A	4.10.1.6	2A
		4.10-54B	4.10.1.6	2C
		4.10-54B	4.10.1.6	2D
3197	7-1-71	4.10-79	4.10.2.1	12
	7-1-71	4.10-84	4.10.2.1	24
3198	7-1-71	4.10-102	4.10.3.1	16
	7-1-71	4.10-102	4.10.3.1	18
3199	7-1-71	4.6-19	4.6.1.14	2
		4.6-20	4.6.1.14	3
		4.8-8	4.8.2.1	4
		4.8-9	4.8.2.1	6
		4.8-11	4.8.2.1	9
		4.8-13	4.8.2.1	11
		4.8-14	4.8.2.1	13
		4.8-14	4.8.2.1	14
		4.8-15	4.8.2.1	16
		4.8-16	4.8.2.1	17
	7-1-71	4.8-17	4.8.2.1	18
		4.8-18	4.8.2.1	20
		4.8-24	4.8.3.1	8
		4.8-25	4.8.3.1	9
		4.8-25	4.8.3.1	10
		4.8-25	4.8.3.1	11
		4.8-27	4.8.3.1	12
3201	7-1-71	4.3-26	4.3.6.4	1-6
3202	7-1-71	4.3-27	4.3.7	1, 2, 3, 4
3203	7-1-71	4.2-46	4.2.26	3
		4.2-47	4.2.26	6
3204	7-1-71	4.3-10	4.3.1	21
3207	7-1-71	4.5-5	4.5.1.3	4
		4.5-6	4.5.1.4	2
		4.6-3	4.6.1.1	1 & 2
		4.6-4	4.6.1.3	2
		4.6-5	4.6.1.5	2
		4.6-19	4.6.1.14	2 & 3
		4.6-25	4.6.1.18	8
		4.6-29	4.6.1.20	1
		4.6-30	4.6.1.20	3

Change No.	Date Change Incorporated	Page No. Affected	Para No. Affected	Step No. Affected
3207	7-1-71	4.6-30	4.6.1.21	1
		4.6-30	4.6.1.21	2
		4.6-31	4.6.1.23	2
		4.6-36	4.6.1.29	1
		4.6-47	4.6.2.5	1b
		4.6-48	4.6.2.5	3c
		4.6-58	4.6.2.14	2c
		4.9-4	4.9.1.1	8
		4.9-12	4.9.1.2	19
	7-1-71	4.9-14	4.9.1.3	3
		4.9-18	4.9.2.1	1a
		4.10-21	4.10.1.1	26b
		4.10-38	4.10.1.2	20b
		4.10-63	4.10.1.7	2
		4.10-71	4.10.1.7	27
		4.10-71	4.10.1.7	28
		4.10-115	4.10.3.2	15b
		4.10-126	4.10.3.3	17b
	7-1-71	4.11-5	4.11.1	19
		4.11-6	4.11.2	22
		4.11-6	4.11.2	2
		4.11-10	4.11-2	19
		5.4-10	5.4.8	6
		5.4-10	5.4.8	9a
		5.4-11	5.4.8	9b
		5.4-14	5.4.10	2
3208	7-1-71	4.6-48	4.6.2.5	4d
3209	7-1-71	4.10-114	4.10.3.2	10
		4.10-118	4.10.3.3	1h
		4.10-125	4.10.3.3	9
3210	7-1-71	4.15-37	4.15.2.2	2, 3
3211	7-1-71	4.13-48	4.13.7.5	
		4.13-49	4.13.7.6	
3212	7-1-71	5.2-16	Symptom 1	Remark 3
		5.2-17	Symptom 2	New
3213	7-1-71	4.10-90	4.10.2.3	10
		4.10-91	4.10.2.3	10
3214	7-1-71	4.6-67	4.6.3.2	24
		4.6-67	4.6.3.2	27
		4.6-67	4.6.3.2	29
		4.6-68	4.6.3.2	35
3215	7-1-71	4.2-28	4.2.13.7	9
		4.13-16	4.13.1.11	5a
		4.13-16	4.13.1.11	9a
		4.15-27	4.15.1.13	
3216	7-1-71	4.2-10	4.2.3	8
		4.2-22	4.2.13.2	15
		4.3-9	Figure 12	
		4.13-5	4.13.1.1	3
3217A	7-1-71	5.4-24	5.4.20	1-10

Change No.	Date Change Incorporated	Page No. Affected	Para No. Affected	Step No. Affected
3218	7-1-71	5.4-24	5.4.21	-
3220	7-1-71	4.13-45	4.13.7.1	7A
3221	7-1-71	4.6-66	4.6.3.2	18
		4.6-67	4.6.3.2	25
3222	7-1-71	4.2-28	4.2.14	8 & 9
3223	7-1-71	4.2-34	4.2.19	4
		4.2-43	4.2.22	1
			4.2.23	1
		4.2-44	4.2.24	3
			4.2.24	7
		4.13-17	4.13.2.1	
		4.13-17	4.13.2.1	6
		4.13-27	Table 4-2	
3224	7-1-71	4.1-11/4.1-12	4.1	21
3225	7-1-71	4.1-9	4.1	17
3226	7-1-71	4.14-3	4.14.1	12
3227A	7-1-71	5.4-24	5.4.22	1-9
3228	7-1-71	4.10-108	4.10.3.2	1
		4.10-118	4.10.3.3	1
3229	7-1-71	4.10-98	4.10.3.1	8
		4.10-102	4.10.3.1	PGNS 19
		4.10-102	4.10.3.1	AGS 17
3230	7-1-71	5.2-45	Symptom 4	
3231	7-1-71	i, ix, x, xii,	-	-
		xiii, xvi, xvii	-	-
		4.2-1	-	-
		4.2-17	4.2.7	1
	7-1-71	4.2-60	4.2.31	7
		4.3-8	4.3.1	20
		4.3-9	Fig 4-12	-
		4.3-23	4.3.4.2	-
		4.4-1	-	-
		4.4-2	4.4.1	k,u
		4.4-6	4.4.2	i
		4.4-10	4.4.4	41, 42
		4.4-11	4.4.5	05
		4.4-12	4.4.6	17, 27, 30, 31
				44
		4.4-13	4.4.6	67
		4.4-15	4.4.7	06, 07
		4.4-16	4.4.7	14
		4.4-19	4.4.7	46
		4.4-21	4.4.7	63, 69
		4.4-22	4.4.7	71, 72, 77
		4.4-25	4.4.7	99
		4.4-26	4.4.8	-
		4.4-27	4.4.8	-
		4.4-29	4.4.11	-

Change No.	Date Change Incorporated	Page No. Affected	Para No. Affected	Step No. Affected
3231	7-1-71	4.4-30	4.4.11	-
		4.4-31	4.4.11	-
		4.4-33	4.4.13	-
		4.4-34	4.4.13	-
		4.4-39	4.4.13	-
		4.4-45	4.4.13	-
		4.4-47	4.4.13	-
		4.4-49	4.4.14	-
		4.4-50	4.4.14	-
		4.5-3	4.5.1.2	
		4.5-5	4.5.1.3	3
		4.5-9	4.5.1.6	2
		4.5-15	4.5.2	1
		4.5-24	4.5.2.3	1c
		4.5-25	4.5.2.3	1d
		4.5-28	4.5.2.5	1
		4.5-32	4.5.3.2	1B
		4.5-33	4.5.3.2	2
		4.5-37	4.5.3.9	2
		4.5-40	4.5.3.14	3
		4.6-6	4.6.1.7	4
		4.6-7	4.6.1.7	7
		4.6-8	4.6.1.7	7b
		4.6-8	4.6.1.8	2
		4.6-8A/4.6-8B	4.6.1.8	2
		4.6-9	4.6.1.8	2, 3
		4.6-10	4.6.1.8	6
		4.6-11	4.6.1.8	6
		4.6-11	4.6.1.9	-
		4.6-16	4.6.1.11	-
		4.6-18	4.6.1.13	3
		4.6-20	4.6.1.14	3
		4.6-21	4.6.1.15	6
		4.6-22	4.6.1.16	5, 6, 7
		4.6-23	4.6.1.17	3
		4.6-24	4.6.1.18	1, 2
		4.6-26	4.6.1.18	9, 10
		4.6-28	4.6.1.19	4
		4.6-29	4.6.1.19	6
		4.6-29	4.6.1.20	2
		4.6-30	4.6.1.20	3
		4.6-31	4.6.1.22	1
		4.6-32	4.6.1.24	1
		4.6-32	4.6.1.24	2
		4.6-33	4.6.1.26	-
		4.6-33	4.6.1.27	1
		4.6-36	4.6.1.28	7, 9
		4.6-37	4.6.1.30	-
		4.6-38	4.6.1.32	-
		4.6-39	4.6.1.33	-
		4.6-39	4.6.1.34	2
		4.6-41	4.6.1.37	1
		4.6-42	4.6.1.39	-
		4.6-43	4.6.2.1	-
		4.6-44	4.6.2.1	6
		4.6-47	4.6.2.5	1c
		4.6-49	4.6.2.6	-
		4.6-50	4.6.2.6	-
		4.6-56	4.6.2.13	-
		4.6-57	4.6.2.13	2
		4.6-59	4.6.2.15	-

Change No.	Date Change Incorporated	Page No. Affected	Para No. Affected	Step No. Affected
3231	7-1-71	4.6-64A/B	4.6.3.1	3
		4.6-67	4.6.3.2	22, 23, 24, 25
		4.6-69	4.6.3.3	1, 3
		4.6-71	4.6.3.5	-
		4.6-73	4.6.3.5	5
		4.6-76	Fig. 4-19	-
		4.6-79	4.6.3.6	-
		4.6-80	4.6.3.8	4
		4.6-82	4.6.3.9	1
		4.6-83/84	4.6.3.10	1
		4.7-1	-	-
		4.7-4	4.7.1.1	-
		4.7-14	4.7.1.2	11
		4.7-18	4.7.1.3	5
		4.7-23	4.7.1.4	2, 3
		4.7-26	4.7.1.4	8
		4.7-27	4.7.1.4	9
		4.7-28	4.7.1.4	9
		4.7-29	4.7.1.5	1
		4.7-30	4.7.1.5	2
		4.7-31	4.7.1.5	3, 4
		4.7-33	4.7.2.1	3
		4.7-34	4.7.2.2	3
		4.7-34A	4.7.2.3	3
		4.7-40	4.7.4.1	7, 9
		4.7-43	4.7.4.3	-
		4.7-44	4.7.4.3	3
		4.7-44A/B	4.7.4.3	7, 8
		4.7-47	4.7.4.4	1, 2
		4.7-48	4.7.4.4	3
		4.8-3	4.8.1.2	-
		4.8-6	4.8.2.1	-
		4.8-8	4.8.2.1	2A, 3
		4.8-10	4.8.2.1	7
		4.8-11	4.8.2.1	8a
		4.8-13	4.8.2.1	11
		4.8-15	4.8.2.1	15, 16
		4.8-19	4.8.2.1	21
		4.8-19	4.8.2.2	-
		4.8-20	4.8.2.2	5
		4.8-22	4.8.3.1	-
		4.8-24	4.8.3.1	5, 6
		4.8-25	4.8.3.1	8, 9
		4.8-26	4.8.3.1	11
		4.9-1	-	-
		4.9-3	4.9.1.1	6
		4.9-4	4.9.1.1	8
		4.9-5	4.9.1.1	10
		4.9-6	4.9.1.2	-
		4.9-6A/6B	4.9.1.2	7
		4.9-7	4.9.1.2	7
		4.9-11	4.9.1.2	17
		4.9-12	4.9.1.2	19
		4.9-13	4.9.1.2	34
		4.9-14A/B	4.9.1.4	2, 3
		4.9-16	4.9.1.5	5
		4.9-16A	4.9.1.5	10, 11
		4.9-16B	4.9.1.6	4
		4.9-22	4.9.2.4	4
		4.9-23	4.9.3.1	5
		4.9-25	4.9.3.1	12
		4.9-26	4.9.3.1	16, 17

Change No.	Date Change Incorporated	Page No. Affected	Para No. Affected	Step No. Affected
3231	7-1-71	4.9-27	4.9.3.1	20
		4.9-28A	4.9.3.1	28
		4.10-1	-	-
		4.10-3	4.10.1.1	-
		4.10-14	4.10.1.1	14
		4.10-15	4.10.1.1	14, 15
		4.10-16	4.10.1.1	18
		4.10-17	4.10.1.1	19
		4.10-22	4.10.1.2	-
		4.10-23	4.10.1.2	-
		4.10-24	4.10.1.2	1
		4.10-27	4.10.1.2	5
		4.10-28	4.10.1.2	6a
		4.10-29	4.10.1.2	7a
		4.10-32	4.10.1.2	10
		4.10-34	4.10.1.2	14
		4.10-39	4.10.1.3	-
		4.10-40	4.10.1.3	-
		4.10-45	4.10.1.3	6
		4.10-46	4.10.1.3	7
		4.10-48	4.10.1.3	-
		4.10-50	4.10.1.4	-
		4.10-52	4.10.1.5	-
		4.10-54	4.10.1.6	-
		4.10-54A	4.10.1.6	2A
		4.10-54B	4.10.1.6	2c
		4.10-65	4.10.1.7	7
		4.10-73	4.10.2.1	-
		4.10-77	4.10.2.1	9
		4.10-78	4.10.2.1	9
		4.10-79	4.10.2.1	12
		4.10-81	4.10.2.1	16
		4.10-82	4.10.2.1	18
		4.10-84	4.10.2.1	22
		4.10-85	4.10.2.1	25
		4.10-86	4.10.2.2	-
		4.10-90	4.10.2.3	4
		4.10-93	4.10.3.1	-
		4.10-97	4.10.3.1	5
		4.10-98	4.10.3.1	6
		4.10-100	4.10.3.1	13
		4.10-101	4.10.3.1	18
		4.10-102	4.10.3.1	19
		4.10-107	4.10.3.2	-
		4.10-109	4.10.3.2	3
		4.10-111	4.10.3.2	9
		4.10-115	4.10.3.2	15
		4.10-119	4.10.3.3	3
		4.10-120	4.10.3.3	4
		4.10-126	4.10.3.3	17
		4.11-2	4.11	-
		4.11-3	4.11.1	2
		4.11-7	4.11.2	-
		4.12-1	-	-
		4.12-10	4.12.9	1
		4.12-11	4.12.9	8
		4.12-20	4.12.10	8
		4.12-21	4.12.10	15
		4.14-2	4.14.1	5
		4.14-5	4.14.4	2

Change No.	Date Change Incorporated	Page No. Affected	Para No. Affected	Step No. Affected
3231	7-1-71	4.15-34	4.15.1.20	-
		4.15-36	4.15.2.1.6	5, 7
		5.2-12	SSR-1	-
		5.3-1	-	-
		5.3-2	5.3	-
		5.4-1	-	-
		5.4-2	5.4.1	4
		5.4-3	5.4.2	-
		5.4-10	5.4.8	7
		5.4-11	5.4.8	9
		5.4-14	5.4.10	-
		5.4-15	5.4.12	1
		D4, D5	Table D1	
		D12, D13, D14, D16		
3232	7-1-71	5.2-4	Sympton 1	
		5.2-5	Sympton 2	
		5.2-6	Sympton 5	
		5.2-9	Sympton 4	
3233	7-1-71	4.6-50	4.6.2.7	1
		4.6-52	4.6.2.9	1
3234	7-1-71	4.15-34	4.15.2.1.1	1
		4.15-34	4.15.2.1.1	2
3235	7-1-71	4.1-5	4.1	7
		4.1-5	4.1	8
		4.5-3	4.5.1.2	3
		4.5-5	4.5.1.3	3
		4.5-6	4.5.1.4	2
		4.6-31	4.6.1.23	2
		4.10-96	4.10.3.1	PGNS 5
		4.11-3	4.11.1	1
		4.11-11	4.11.2	PGNS 22
		5.2-8	Sympton 2	
3236	7-1-71	4.7-27	4.7.1.4	9b(2)
3237	7-1-71	4.2-45	4.2.26	All
		4.2-46	4.2.26	All
		4.2-47	4.2.26	All
3240A	9-26-71	5.4-25	5.4.23	1 thru 24
		5.4-31	5.4.24	1 thru 19
		5.4-35	5.4.25	1 thru 32
3242		4.15-30	4.15.1.16.2	8
3243	9-26-71	5.3-12	5.3.12.1	8, 9
3244	9-26-71	4.13-45	4.13.7.1	3
		4.13-46	4.13.7.1	7F, 7G
		4.13-46	4.13.7.1	8
3245	9-26-71	4.10-106	4.10.3.1	PGNS 28
		4.10-106	4.10.3.2	AGS 27
3246	9-26-71	5.2-63	Symptom 3	-

Change No.	Date Change Incorporated	Page No. Affected	Para No. Affected	Step No. Affected
3247	9-26-71	5.4-6	5.4.6	-
		5.4-8	5.4.7	-
		5.4-9	5.4.8	-
		5.4-11	5.4.9	-
		5.4-13	5.4.10	-
		5.4-14	5.4.11	-
3248	9-26-71	4.6-61	4.6.2.18	-
		4.6-62	4.6.2.18	-
3249	9-26-71	4.6-66	4.6.3.2	18
		4.6-67	4.6.3.2	25
3250	9-26-71	4.1-8	Figure 4-2	
		4.2-4	Figure 4-4	
		4.2-9	4.2.2	14
		4.6-63	4.6.2.1	3
3251	9-26-71	5.2-18	Symptom 4	-
3252	9-26-71	5.2-8	Symptom 1	-
3253	9-26-71	5.2-16	Symptom 1	-
3254	9-26-71	5.2-17	Symptom 3	-
3255	9-26-71	5.2-17	Symptom 3	-
		5.2-18	Symptom 4	-
3256	9-26-71	5.2-20	Symptom 9	-
3257	9-26-71	5.2-14	Symptom 1	-
3258	9-26-71	5.2-14	Symptom 1	
3259	9-26-71	5.2-8	Symptom 1	-
3260	9-26-71	5.2-16	Symptom 1	-
		5.2-19	Symptom 7	-
		5.2-33	Symptom 4	-
3261	9-26-71	5.2-58	Symptom 1	-
3262	9-26-71	5.2-59	Symptom 3	-
		5.2-60	Symptom 4	-

PRELAUNCH CLOSEOUT CHECK

SUBSYSTEM ACTIVATION

SUBSYSTEM DEACTIVATION

G & C REFERENCE DATA

G & C REFERENCE MODES

G & C GENERAL

PRETHRUST

NAVIGATION

ALIGNMENT

THRUST

SEPARATION & DOCKING

STAGING

SUBSYSTEM MANAGEMENT

INTRAVEHICULAR OPERATION

LUNAR STAY OPERATON

PARA	TITLE	PAGE
4.1	Prelaunch Closeout Check	4.1-2

CREW-MAN	PNL	PROCEDURES	REMARKS
		4.1 PRELAUNCH CLOSEOUT CHECK	
		The prelaunch closeout check is performed by a backup flight crew. It is assumed that a complete prelaunch checkout, including stowage of loose gear, has been performed by ground support personnel before the backup flight crew enters the LM.	
	11	1. All cb's - open, except: CB HTR: RNDZ RDR STBY - close LDG RDR - close CB LTG: ANUN/DOCK/COMPNT - close CB PGNS: IMU STBY - close CB EPS: BAT FEED TIE (2) - close CROSS TIE BAL LOADS - close DES ECA - close DC BUS VOLT - close Verify cb status per Prelaunch Closeout Check.	All tb's indicate no-power condition. Because some switches are spring loaded to center positions, desired status of solenoid valves (or relays) is presented. See figure 4-1.
	8	2. DES PROPUL: FUEL VENT sw - center; tb - bp OXID VENT sw - center; tb - bp HTR CONT: MESA sw - LO URINE LINE sw - OFF ED: DES PRPLNT ISOL VLV sw - SAFE MASTER ARM sw - OFF DES VENT sw - SAFE ASC He SEL sw - BOTH LDG GEAR DEPLOY sw - SAFE; tb - bp RCS He PRESS sw - SAFE DES START He PRESS sw - SAFE ASC He PRESS sw - SAFE STAGE sw - SAFE STAGE RELAY sw - OFF AUDIO: S BAND T/R sw - OFF ICS T/R sw - OFF RELAY ON sw - RELAY OFF S BAND VOL tw - as desired ICS VOL tw - as desired MODE sw - ICS/PTT AUDIO CONT sw - NORM VHF A sw - OFF VHF B sw - OFF	FUEL VENT latching valve - open. OXID VENT latching valve - open.

PARA	TITLE	PAGE
4.2	Subsystem Activation	4.2-2
4.2.1	Initial Entry Status Check	4.2-2
4.2.2	EPS Activation & Checkout	4.2-5
4.2.3	Primary Glycol Loop Activation	4.2-9
4.2.4	Circuit Breaker Activation	4.2-10
4.2.5	Primary Sublimator Activation	4.2-16
4.2.6	Lighting Activation & Checkout	4.2-16
4.2.7	Utility Lights Activation & Checkout	4.2-17
4.2.8	AOT Lighting Check	4.2-17
4.2.9	COAS Lighting Check	4.2-18
4.2.10	Caution & Warning Array Checkout	4.2-19
4.2.11	Timer Electroluminescent (EL) Numeric Check	4.2-20
4.2.12	Set Mission Timer	4.2-20
4.2.13	ECS Activation & Checkout	4.2-21
4.2.13.1	Consumables Check	4.2-21
4.2.13.2	Glycol Pump Check	4.2-21
4.2.13.3	SUIT ISOL Valve Check	4.2-22
4.2.13.4	O2 Supply Activation	4.2-23
4.2.13.5	Suit Fan Activation, Checkout, and Water Separator Check	4.2-23
4.2.13.6	O2 Demand Regulator Checkout	4.2-24
4.2.13.7	In-Flight O2 Demand Regulator Check (Alternative)	4.2-27
4.2.14	Crewman Connect to LM ECS	4.2-28
4.2.15	Crewman Disconnect Transfer Umbilical	4.2-28A
4.2.16	ARS/PGA Pressure Integrity Check	4.2-29
4.2.17	VHF Activation & Checkout	4.2-31
4.2.18	VHF B Simplex Check	4.2-33
4.2.19	S-Band Activation & Checkout, Using Omni Antenna	4.2-34
4.2.20	S-Band Steerable Antenna Activation and Checkout	4.2-34
4.2.21	Low-Power S-Band Backup Voice, LBR Check With Steerable Antenna	4.2-40
4.2.22	S-Band Ranging, Voice, and Telemetry Check	4.2-43
4.2.23	S-Band FM Check	4.2-43
4.2.24	Secondary S-Band Transceiver & Power Amplifier Check	4.2-44
4.2.25	S-Band Backup Voice & Keying Check	4.2-45
4.2.26	Ascent Battery Activation & Checkout	4.2-45
4.2.27	APS Temp/Press Prepressurization Check	4.2-48
4.2.28	DPS Temp/Press Prepressurization Check	4.2-49
4.2.29	DPS Pressurization & Checkout	4.2-50
4.2.30	RCS Pressurization	4.2-54
4.2.31	RCS Hot/Cold Firing Check	4.2-57
4.2.32	Landing Gear Deploy	4.2-61

CREW-MAN	PNL	PROCEDURES	REMARKS
		4.2 SUBSYSTEM ACTIVATION	
		Subsystem activation consists of tasks performed by the crew to turn on & check the LM subsystems. Sticky talkbacks may be loosened by tapping panel.	
		4.2.1 INITIAL ENTRY STATUS CHECK	Assumption: Initial Intravehicular Transfer to LM (para 4.14.1) and Enable LM Cabin Repressurization System (para 4.14.5) have been performed.
		0. Verify that LCG accumulator bob is not bottomed.	
	11	1. All cb's - open, except: CB HTR: RNDZ RDR STBY - close LDG RDR - close CB LTG: ANUN/DOCK/COMPNT - close CB PGNS: IMU STBY - close CB EPS: BAT FEED TIE (2) - close CROSS TIE BAL LOADS - close DES ECA - close DC BUS VOLT - close Verify cb status per Initial Entry Status Check	See figure 4-3.
	16	2. All cb's - open, except: CB LTG: FLOOD - close CB S/C: ASA - close CB ECS: CABIN REPRESS - close CB HTR: MESA - close S BD ANT - close CB EPS: DC BUS VOLT - close DES ECA - close CROSS TIE BAL LOADS - close BAT FEED TIE (2) - close Verify cb status per Initial Entry Status Check	See figure 4-4.
		3. Request CMP to initiate power transfer to LM via docking tunnel electrical umbilicals.	All indicator power failure lights, except RNG/ALT (9) - on when on LM power; off when on CSM power X-pointer (2) THRUST MPS: PRESS RCS: PRESS, QUANTITY ECS: PRESS, GLYCOL QUANTITY

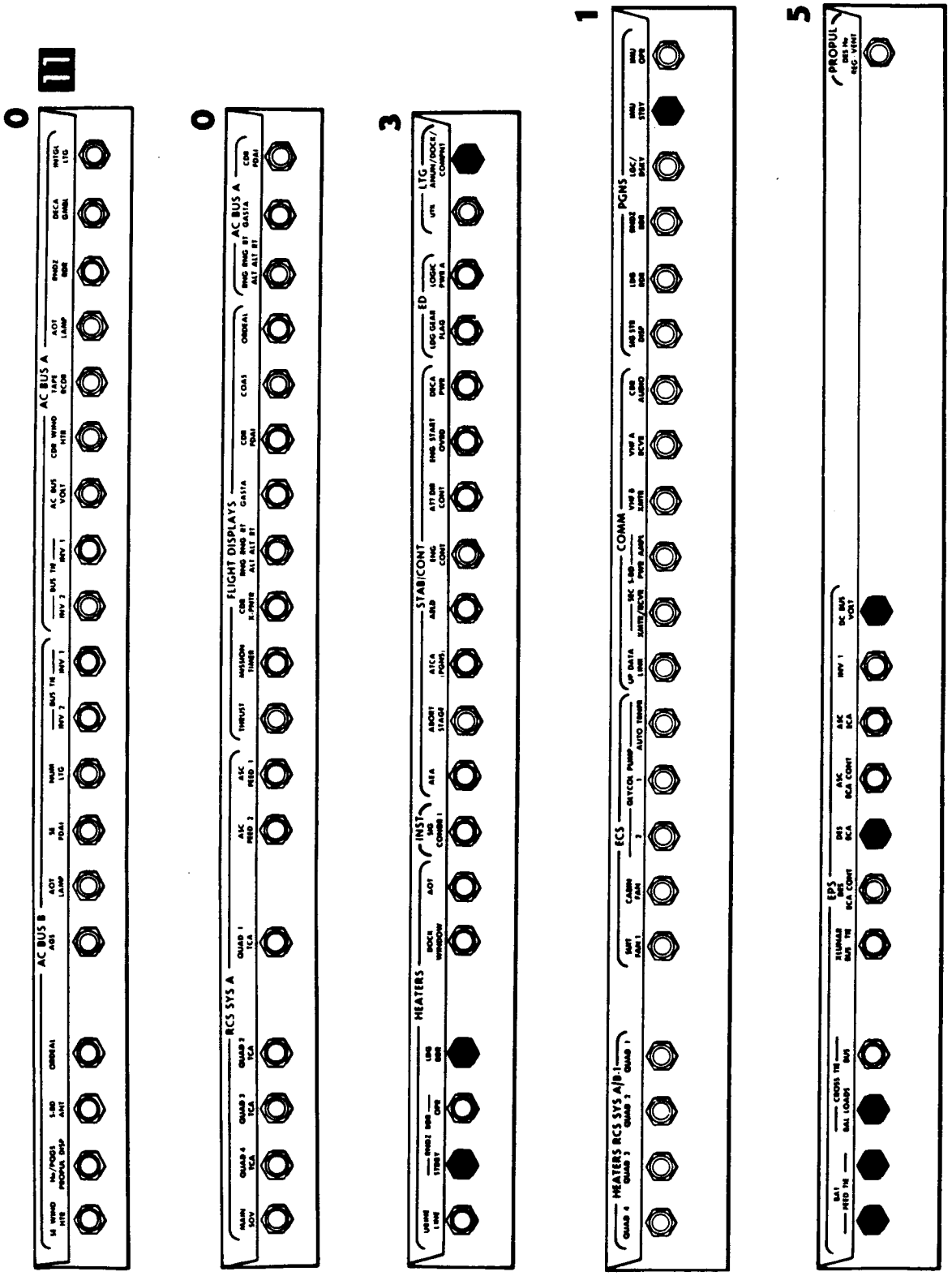

Figure 4-1. Prelaunch Closeout Check (Panel 11)

CREW-MAN	PNL	PROCEDURES	REMARKS
		4.1 PRELAUNCH CLOSEOUT CHECK (cont)	
		VOX SENS tw - as desired VHF A VOL tw - as desired VHF B VOL tw - as desired MASTER VOL tw - as desired COAS sw - OFF	
		3. ORDEAL: FDAI 1 sw - INRTL FDAI 2 sw - INRTL EARTH/LUNAR sw - PWR OFF LTG sw - OFF MODE sw - HOLD/FAST SLEW sw - center ALT SET cont - TBD nm	
	TTCA	4. THROTTLE/JETS cont (CDR) - JETS Throttle friction cont (CDR) - as desired	
	5	5. DES RATE sw - center Eng STOP pb/lt - reset Eng START pb/lt - not depressed +X TRANSL pb - not depressed MSN TMR: TMR CONT sw - STOP SLEW CONT HOURS sw - center SLEW CONT MIN sw - center SLEW CONT SEC sw - center LTG: OVERRIDE ANUN sw - OFF OVERRIDE NUM sw - OFF OVERRIDE INTEGRAL sw - OFF SIDE PANELS sw - OFF FLOOD cont - BRIGHT ANUN/NUM cont - DIM INTEGRAL cont - DIM	
	ACA	6. PTT pb (CDR) - not depressed	
	1	7. X POINTER SCALE sw - HI MULT MASTER ALARM pb/lt - not depressed RATE/ERR MON sw - LDG RDR/CMPTR ATTITUDE MON sw - PGNS	

LM3225

CREW-MAN	PNL	PROCEDURES	REMARKS
		4.1 PRELAUNCH CLOSEOUT CHECK (cont)	
	14	17. EPS:	
		ED VOLTS sw - OFF	
		POWER/TEMP MON sel - ED/OFF	
		INVERTER sw - OFF	
		LMP BAT 1 HI V & LO V sws (2) - center; tb - bp	LMP bat 1 HI V & LO V - off
		LMP BAT 2 sw - center; tb - bp	LMP bat 2 - off
		CDR BAT 3 sw - center; tb - bp	CDR bat 3 - OFF
		CDR BAT 4 HI V & LO V sws (2) - center; tb - bp	CDR bat 4 HI V & LO V - off
		CDR & LMP LUNAR BAT sws (2) - center; tb - bp	CDR & LMP lunar bat - off
		DES BATS sw - center; tb - bp	Des bats - connect
		BAT 5 NORMAL LMP FEED sw - center; tb - bp	Bat 5 normal LMP feed - off
		BAT 5 BACK UP CDR FEED sw - center; tb - bp	Bat 5 backup CDR feed - off
		BAT 6 NORMAL CDR FEED sw - center; tb - bp	Bat 6 normal CDR feed - off
		BAT 6 BACK UP LMP FEED sw - center; tb - bp	Bat 6 backup LMP feed - off
		COMM: UPLINK SQUELCH sw - ENABLE	
	12	18. UP DATA LINK sw - OFF	
		AUDIO:	
		AUDIO CONT sw - NORM	
		S BAND T/R sw - OFF	
		ICS T/R sw - OFF	
		RELAY ON sw - RELAY OFF	
		S BAND VOL tw - as desired	
		ICS VOL tw - as desired	
		MODE sw - ICS/PTT	
		VHF A sw - OFF	
		VHF B sw - OFF	
		VOX SENS tw - as desired	
		VHF A VOL tw - as desired	
		VHF B VOL tw - as desired	
		MASTER VOL tw - as desired	
		COMM:	
		S BAND MODULATE sw - PM	
		S BAND XMTR/RCVR sw - OFF	
		S BAND PWR AMPL sw - OFF	
		S BAND VOICE sw - OFF	
		S BAND PCM sw - OFF	
		S BAND RANGE sw - OFF/RESET	
		VHF A XMTR sw - OFF	
		VHF A RCVR sw - OFF	
		VHF B XMTR sw - OFF	
		VHF B RCVR sw - OFF	
		TLM BIOMED sw - OFF	

CREW-MAN	PNL	PROCEDURES	REMARKS
		4.1 PRELAUNCH CLOSEOUT CHECK (cont)	
		TLM PCM sw - HI	
		VHF A SQUELCH tw - as desired	
		VHF B SQUELCH tw - as desired	
		RECORDER sw - OFF	
		RECORDER TAPE tb - bp	
		COMM ANT:	
		VHF sel - AFT	
		TRACK MODE sw - OFF	
		PITCH cont - -75°	
		YAW cont - -12°	
		S BAND sel - AFT	
		19. Ovhd floodlights (CDR & LMP) - rotate aft	
	UTL	CDR & LMP UTILITY LIGHTS sw - OFF	
	ECS	20. SUIT GAS DIVERTER vlv - PULL EGRESS	
		CABIN REPRESS vlv - CLOSE	
		LO PLSS FILL vlv - CLOSE	
		PRESS REG A vlv - CLOSE	
		PRESS REG B vlv - CLOSE	
		DES O2 vlv - CLOSE	
		#1 ASC O2 vlv - CLOSE	
		#2 ASC O2 vlv - CLOSE	
		SUIT ISOL vlv (CDR) - SUIT DISC	
		SUIT ISOL vlv (LMP) - SUIT DISC	
		ASC H2O vlv - CLOSE	
		SEC EVAP FLOW vlv - CLOSE	
		PRI EVAP FLOW #2 vlv - CLOSE	
		DES H2O vlv - CLOSE	
		PRI EVAP FLOW #1 vlv - CLOSE	
		WATER TANK SELECT vlv - DES	
		SUIT TEMP vlv - COLD	
		CABIN GAS RETURN vlv - AUTO	
		SUIT CIRCUIT RELIEF vlv - AUTO	
		CO2 CANISTER SEL vlv - PRIM	
		PRIM CO2 CANISTER cover - CLOSE	
		SEC CO2 CANISTER cover - CLOSE	
		WATER SEP SEL vlv - PULL SEP 2	
		Cabin relief & dump vlv (ovhd) - OPEN	
		Cabin relief & dump vlv (fwd) - AUTO	
		LIQUID GARMENT COOLING vlv - COLD	
	+Z27	HI PLSS O2 FILL vlv - CLOSE	

LM3224

CREW-MAN	PNL	PROCEDURES	REMARKS
		4.1 PRELAUNCH CLOSEOUT CHECK (cont)	
		21. CDR, LMP, & docking window shades - deployed (window covered) & secure, crash bars - stowed	
	MESA	22. Color TV control settings: Aperture - F/11 Zoom - 25 mm Focus - 6 (feet) ALC sw (Peak/Average sw) - AVERAGE TRANSMIT/STANDBY sw - TRANSMIT	Lens cap must be folded back over lens barrel and secured with thermal blanket so that cap will not swing back in front of lens and obstruct optical field of view.

PRELAUNCH CLOSEOUT

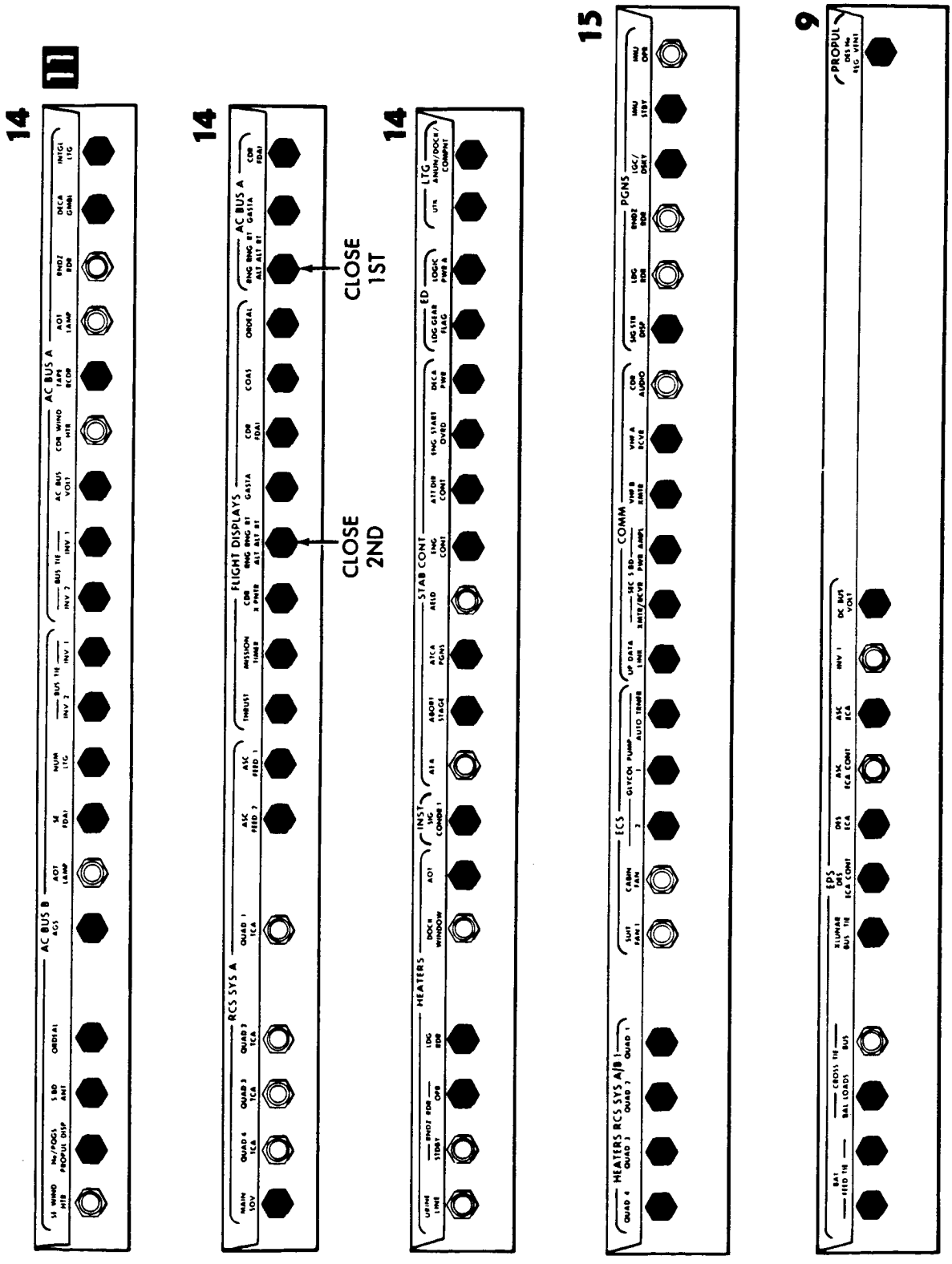

300LM10-1061-5

Figure 4-5. Circuit Breaker Activation (Panel 11)

CREW-MAN	PNL	PROCEDURES	REMARKS
		4.2.4 CIRCUIT BREAKER ACTIVATION (cont)	
		CB ECS:	
		GLYCOL PUMP SEC - open	
		LCG PUMP - as required	LCG pump activation is crew comfort item.
		CB CAMR: SEQ - open	
		CB EPS:	
		ASC ECA CONT - open	
		CROSS TIE BUS - open	
		CROSS TIE BAL LOADS - open	
		Verify cb status per Circuit Breaker Activation	See figure 4-6.
	16	8. CB INST: CWEA - open	
	1,2	MASTER ALARM - on	
	2	C/W PWR caut lt - on	
	16	CB INST: CWEA - close	
	1/2	MASTER ALARM pb/lt - reset	
	1	CES AC warn lt - off	Cycling CB INST: CWEA resets CES AC and CES DC warn lt logic, allowing lights to go off.
		CES DC warn lt - off	
	2	PRE AMPS caut lt - off	
		C/W PWR caut lt - off	
	16	CB S/C: AELD - open	
	1	9. MPS: PRESS ind pwr fail lt - off	
		ASC He REG 1 tb - gray	ASC He REG latching valve is open when tb - gray.
		ASC He REG 2 tb - gray	ASC He REG latching valve is open when tb - gray.
		DES He REG 1 tb - gray	DES He REG latching valve is open when tb - gray.
		DES He REG 2 tb - bp	DES He REG latching valve is closed when tb - bp.
	2	10. RCS:	
		PRESS ind pwr fail lt - off	
		QUANTITY ind pwr fail lt - off	
		SYS A ASC FUEL tb - bp	RCS: ASC FUEL (ASC OXID) tb - bp indicates that ASC FEED 1 fuel (oxidizer) valve or ASC FEED 2 fuel (oxidizer) valve, or both valves, are closed. Normal configuration is ASC FEED 2 valves closed and ASC FEED 1 valves open.
		SYS A ASC OXID tb - bp	
		SYS B ASC FUEL tb - bp	
		SYS B ASC OXID tb - bp	
		SYS A QUAD 1, 4, 2, & 3 tb - gray	
		SYS B QUAD 1, 4, 2, & 3 tb - gray	
		SYS A & B MAIN SOV tb - gray	
		CRSFD tb - bp	
		X pointer ind pwr fail lt - off	
		FDAI pwr tb - on (out of view)	

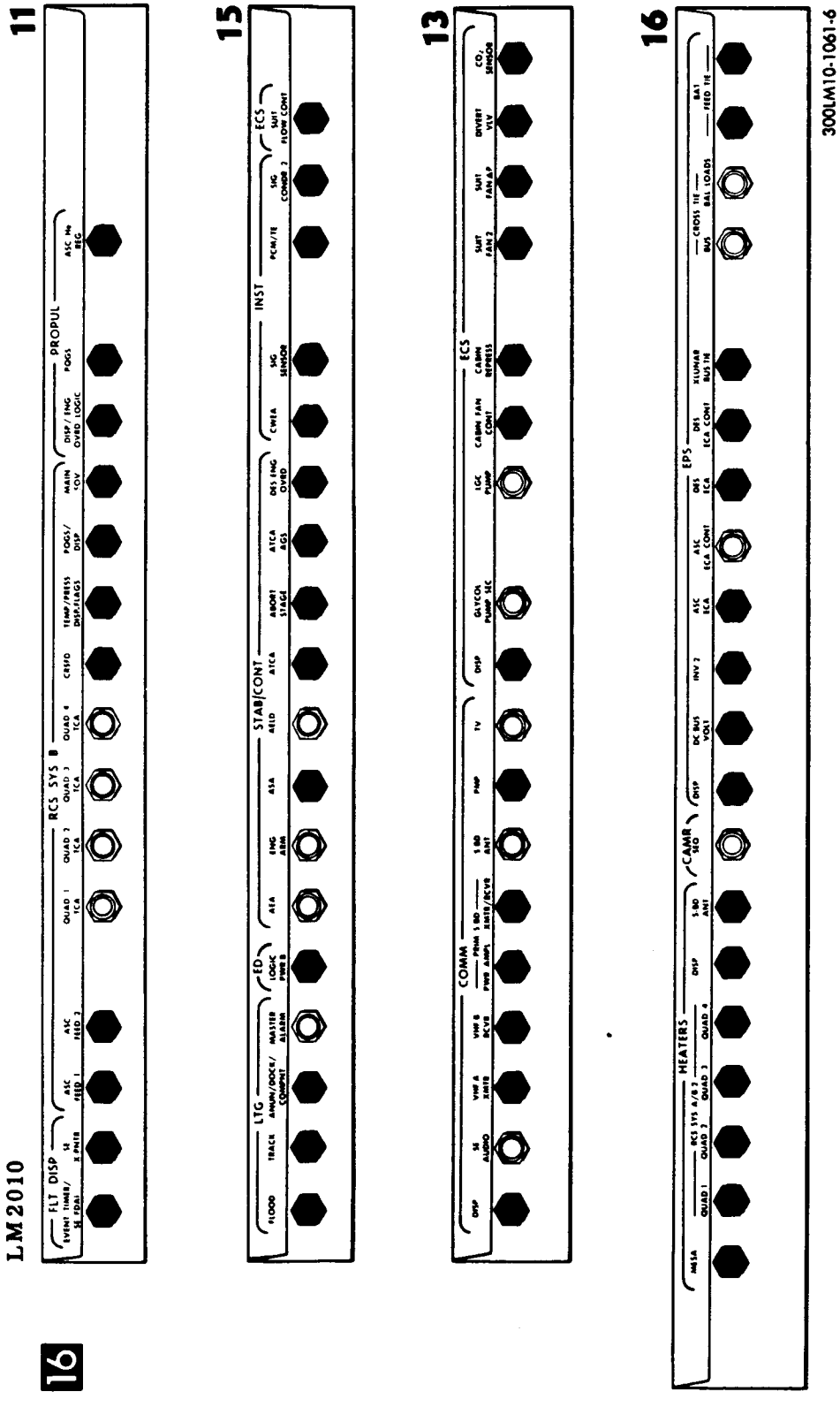

Figure 4-6. Circuit Breaker Activation (Panel 16)

CREW-MAN	PNL	PROCEDURES	REMARKS
		4.2.5 PRIMARY SUBLIMATOR ACTIVATION	Activated primary sublimator requires minimum of 1200 Btu/hr heat input to prevent freezing and bursting. Previous circuit breaker activation supplies sufficient heat input.
	ECS	1. PRI EVAP FLOW #1 vlv - OPEN	
	2	2. ECS: GLYCOL temp ind - monitor	GLYCOL caut lt - off when ECS: GLYCOL temp ind decreases below 50° F. Time required is function of initial vehicle temperature, vehicle orientation, and glycol loop heat load. Periodically monitor ECS: GLYCOL temp ind to verify temperature is decreasing.
		4.2.6 LIGHTING ACTIVATION & CHECKOUT	
	3	1. LTG: SIDE PANELS sw - ON FLOOD sw - OVHD/FWD, then OFF, then ALL FLOOD cont - BRIGHT, then DIM, then adjust as desired EXTERIOR LTG sw - TRACK, then DOCK, then OFF	
	5	2. LTG: FLOOD cont - BRIGHT, then DIM, then adjust as desired ANUN/NUM cont - BRIGHT, then DIM OVERRIDE ANUN sw - ON, then OFF OVERRIDE NUM sw - ON, then OFF ANUN/NUM cont - adjust as desired INTEGRAL cont - BRIGHT, then DIM SIDE PANELS sw - ON OVERRIDE INTEGRAL sw - ON, then OFF INTEGRAL cont - adjust as desired	Panel 5 or 3 (or both) LTG: SIDE PANELS sw - OFF (if desired) after check.

CREW-MAN	PNL	PROCEDURES	REMARKS
		4.2.7 UTILITY LIGHTS ACTIVATION & CHECKOUT	
		1. Remove both utility lights from stowage.	If utility lights are connected, omit steps 1 thru 4.
		WARNING Before utility lights are connected or disconnected, to avoid mating or demating a hot connector, perform step 2.	
	UTL 11	2. CDR & LMP UTILITY LIGHTS sw - OFF CB LTG: UTIL - open	
		3. Remove dust caps from utility light connectors.	
		4. Connect utility lights to power receptacle.	
	11 UTL	5. CB LTG: UTIL - close CDR UTILITY LIGHTS sw - BRIGHT, then DIM, then OFF LMP UTILITY LIGHTS sw - BRIGHT, then DIM, then OFF	
		6. Place utility lights in operational locations.	For trans-lunar coast and lunar landing, both utility lights may be stowed on AOT guard.
		4.2.8 AOT LIGHTING CHECK	
	11	1. CB/AC BUS A: AOT LAMP - close	
	AOT	2. RETICLE BRIGHTNESS cont - decr, then incr, adjust as desired	RETICLE BRIGHTNESS cont is on computer control and reticle dimmer assembly (CCRD). Lights are in AOT. Reticle seen through AOT optics, legends on CCRD, and angle counter should be illuminated.
	11	3. CB/AC BUS A: AOT LAMP - open	

CREW-MAN	PNL	PROCEDURES	REMARKS
		4.2.9 COAS LIGHTING CHECK	
	8	1. COAS sw - OVHD	
	COAS	2. COAS brightness cont - dim, then bright	
	8	3. COAS sw - OFF	
		CAUTION To avoid damage to connectors, be careful when mating or demating COAS.	
		4. Remove COAS from overhead position.	
		5. COAS detent - LW	
		6. Install COAS in forward position.	
	8	7. COAS sw - FWD	
	COAS	8. COAS brightness cont - dim, then bright	
	8	9. COAS sw - OFF	
		10. Remove COAS from forward position.	
		11. COAS detent - overhead position	
		12. Install COAS in overhead mounting position.	

CREW-MAN	PNL	PROCEDURES	REMARKS
		4.2.10 CAUTION & WARNING ARRAY CHECKOUT	
	16	1. CB INST: CWEA - open	
	2	C/W PWR caut lt - on	C/W PWR caut lt remains on while CB INST: CWEA - open.
	3	2. LTG: LAMP/TONE TEST sel - C/W 1	
	1	Left bank warn lts - on	
	3	3. LTG: LAMP/TONE TEST sel - ENG PB C/W 2	
	1	Left bank warn lts - off	
		Right bank warn lts - on	
	5	Eng START pb/lt - on	
	5, 6	Eng STOP pb/lt (2) - on	
	3	4. LTG: LAMP/TONE TEST sel - C/W 3	
	1	Right bank warn lts - off	
	2	Left bank caut lts - on	
	5	Eng START pb/lt - off	
	5, 6	Eng STOP pb/lt (2) - off	
	3	5. LTG: LAMP/TONE TEST sel - C/W 4	
	2	Left bank caut lts - off	
		Right bank caut lts - on	
	3	6. LTG: LAMP/TONE TEST sel - COMPNT	
	2	Right bank caut lts - off; except C/W PWR caut lt - on	
	8	ED:	
		STAGE SEQ RLY SYS A comp caut lt - on	
		STAGE SEQ RLY SYS B comp caut lt - on	
	14	EPS:	
		BAT FAULT comp caut lt - on	
		DC FEEDER FAULT comp caut lt - on	
	2	SUIT FAN comp caut lt - on	
		GLYCOL comp caut lt - on	
		CO2 comp caut lt - on	
		H2O SEP comp caut lt - on	
	3	RNDZ RADAR: NO TRACK lt - on	
	1, 3	LUNAR CONTACT lt (2) - on	
	3	7. LTG: LAMP/TONE TEST sel - OFF	
		All lts in step 6 - off	

SUBS ACT

CREW-MAN	PNL	PROCEDURES	REMARKS
		4.2.10 CAUTION & WARNING ARRAY CHECKOUT (cont)	
	16	8. CB INST: CWEA - close C/W PWR caut lt - off RCS A REG warn lt - on RCS B REG warn lt - on	CB INST: CWEA - close resets flip-flops, causing annunciator lights to go on.
	2	ECS caut lt - on GLYCOL caut lt - on (if glycol temp >50° F) H2O SEP comp caut lt - on SUIT FAN comp caut lt - on	
	16 1,2	9. CB LTG: MASTER ALARM - close MASTER ALARM - on MASTER ALARM pb/lt - reset	
		4.2.11 TIMER ELECTROLUMINESCENT (EL) NUMERIC CHECK	
	5	1. MSN TMR: SLEW CONT (HOURS, MIN, & SEC) sw - TENS & UNITS to step thru range of numbers for digit (at least 0 thru 5) & observe configuration to check all EL numeric segments.	
	3	2. EVNT TMR: SLEW CONT (MIN & SEC) sw - TENS & UNITS to step thru range of numbers for digit (at least 0 thru 5) & observe configuration to check all EL numeric segments.	
		4.2.12 SET MISSION TIMER	
	5	1. MSN TMR: TMR CONT sw - RESET SLEW CONT HOURS sw - TENS, then UNITS	
		2. Repeat step 1 for MSN TMR: SLEW CONT MIN & SLEW CONT SEC sw.	
		3. MSN TMR: TMR CONT sw - START	

CREW-MAN	PNL	PROCEDURES	REMARKS
		4.2.13 ECS ACTIVATION & CHECKOUT	Assumption: Water tank fill ratio is 0.75.
		4.2.13.1 Consumables Check	
	2	1. O2/H2O QTY MON sel - ASC 2 ECS: O2 QUANTITY ind - approx 100% H2O QUANTITY ind - approx 76%	
		2. O2/H2O QTY MON sel - ASC 1 ECS: O2 QUANTITY ind - approx 100% H2O QUANTITY ind - approx 76%	
		3. O2/H2O QTY MON sel - DES 2 ECS: O2 QUANTITY ind - approx 100% H2O QUANTITY ind - approx 66%	Assumption: 15 pounds sampling per descent tank.
		4. O2/H2O QTY MON sel - DES 1 ECS: O2 QUANTITY ind - approx 100% H2O QUANTITY ind - approx 66%	
		4.2.13.2 Glycol Pump Check	
	2	1. GLYCOL sel - PUMP 1	
	11	2. CB ECS: GLYCOL PUMP 2 - close GLYCOL PUMP 1 - close GLYCOL PUMP AUTO TRNFR - close GLYCOL PUMP 1 - open	Simulates pump No. 1 failure.
	1, 2 1/2 11 2	3. MASTER ALARM - on MASTER ALARM pb/lt - reset CB ECS: GLYCOL PUMP 1 - close GLYCOL comp caut lt - on	If Glycol Pump Check is performed after ECS is completely activated, ECS caut lt and GLYCOL comp caut lt will flicker once as pump No. 2 is activated via glycol pump automatic transfer circuit. If Glycol Pump Check is performed before ECS is completely activated, omit step 3. When other signals are routed (via OR gates) to ECS caut lt, GLYCOL comp caut lt will flicker once and MASTER ALARM will not go on. If failure of pump
		4. ECS: GLYCOL press ind - 21 to 37 psia	
		5. GLYCOL sel - INST (SEC)	

CREW-MAN	PNL	PROCEDURES	REMARKS
		4.2.13.2 Glycol Pump Check (cont)	No. 1 occurs, other than an overcurrent, causing CB ECS: GLYCOL PUMP 1 to open, ECS caut lt will flicker once, MASTER ALARM will go on and GLYCOL comp caut lt will remain on until appropriate corrective actions are performed.
		6. ECS: GLYCOL press ind - monitor GLYCOL temp ind - monitor	
	16	7. CB ECS: GLYCOL PUMP SEC - close	
	2	8. ECS: GLYCOL press ind - increase	ECS: GLYCOL press ind will increase 10 to 20 psia above reading in step 6.
	16	9. CB ECS: GLYCOL PUMP SEC - open	
	2	10. GLYCOL sel - PUMP 2 GLYCOL comp caut lt - off	
		11. ECS: GLYCOL press ind - 21 to 37 psia	
	11	12. CB ECS: GLYCOL PUMP AUTO TRNFR - open	
	2	13. GLYCOL sel - PUMP 1	If Glycol Pump Check is performed after ECS is completely activated, ECS caut lt and GLYCOL comp caut lt may flicker once and activate MASTER ALARM. If this occurs, MASTER ALARM pb/lt - reset. If Glycol Pump Check is performed before ECS is completely activated, and other signals are routed (via OR gates) to ECS caut lt, GLYCOL comp caut lt may flicker once.
		14. ECS: GLYCOL press ind - 21 to 37 psia	
		4.2.13.3 SUIT ISOL Valve Check	
	ECS	1. SUIT ISOL vlv (LMP) - SUIT FLOW SUIT ISOL vlv (CDR) - SUIT FLOW	
		2. SUIT ISOL vlv (LMP): ACTUATOR OVRD - PULL ACT	
		3. SUIT ISOL vlv (LMP) - SUIT DISC	
		4. SUIT ISOL vlv (CDR): ACTUATOR OVRD - PULL ACT	
		5. SUIT ISOL vlv (CDR) - SUIT DISC	

CREW-MAN	PNL	PROCEDURES	REMARKS
		4.2.13.4 <u>O2 Supply Activation</u>	
	ECS 16	1. DES O2 vlv - OPEN CB ECS: CABIN FAN CONT - open	When CB ECS: CABIN FAN CONT - open, there is override of automatic deactivation of cabin fan, with PRESS REG A or B vlv - EGRESS.
	ECS	2. PRESS REG A vlv - EGRESS PRESS REG B vlv - EGRESS	PRESS REG A and B vlv - EGRESS to preclude LM from supplying oxygen to LM and CSM while hatches are open.
	2	3. ECS: SUIT PRESS ind - 5±0.2 psia	CSM O2 supply is 5±0.2 psia.
		4.2.13.5 <u>Suit Fan Activation, Checkout, and Water Separator Check</u>	
	2	1. SUIT FAN sel - 2	
	16	2. CB ECS: SUIT FAN 2 - close	
	1,2 1 1/2 2	3. MASTER ALARM - on SUIT/FAN warn lt - on, then off MASTER ALARM pb/lt - reset SUIT FAN comp caut lt - off H2O SEP comp caut lt - off ECS caut lt - off	MASTER ALARM may go on approximately 7 seconds after selection of suit fan No. 2 subsequent to use or failure of suit fan No. 1. ECS caut lt and H2O SEP comp caut lt - off when water separator comes up to speed. Time is approximately 1 minute when dry; up to 15 minutes when wet.
	2	4. ECS: PART PRESS CO2 ind - zero mm Hg	CO2 level is function of time that crew is on ARS. At initial ARS activation or following LiOH cartridge replacement, reading should be zero mm Hg.
	16	5. CB ECS: SUIT FAN 2 - open	
	1,2 1 2 1/2	6. MASTER ALARM - on SUIT/FAN warn lt - on SUIT FAN comp caut lt - on ECS caut lt - on H2O SEP comp caut lt - on MASTER ALARM pb/lt - reset	When suit fans are deactivated, water separator slows down, causing delayed activation of ECS caut lt and H2O SEP comp caut lt. Time for water separator to slow down is approximately 15 seconds when wet; 2.5 to 3 minutes when dry. ECS caut lt and H2O SEP comp caut lt - off when selected water separator comes up to speed, approximately 1 minute when dry; up to 15 minutes when wet.

CREW-MAN	PNL	PROCEDURES	REMARKS
		4.2.13.5 Suit Fan Activation, Checkout, and Water Separator Check (cont)	
	ECS	7. WATER SEP SEL vlv - PUSH SEP 1	
	11	8. CB ECS: SUIT FAN 1 - close	
	2	9. SUIT FAN sel - 1	
	1 2	10. SUIT/FAN warn lt - off SUIT FAN comp caut lt - off ECS caut lt - off H2O SEP comp caut lt - off	
	16	11. CB ECS: SUIT FAN 2 - close	
		4.2.13.6 O2 Demand Regulator Checkout	Assumption: ARS/PGA Pressure Integrity Check (para 4.2.16) has been performed.
		WARNING This procedure requires approx 2.2 to 2.5 pounds of oxygen to be dumped overboard. This checkout must not be performed when staged. It may be performed (using descent oxygen) when unstaged only if dumping 2.2 to 2.5 pounds of oxygen overboard does not compromise mission.	If CB ECS: CABIN FAN - open, references to cabin fan do not apply.
		NOTE When dumping cabin pressure in following steps, observe ECS: SUIT PRESS ind on panel 2, to verify suit loop lockup (seating of SUIT CIRCUIT RELIEF vlv at 4.3 psia).	
	ECS	1. PRESS REG A vlv - CABIN SUIT CIRCUIT RELIEF vlv - AUTO CABIN GAS RETURN vlv - EGRESS	

CREW-MAN	PNL	PROCEDURES	REMARKS
		4.2.13.6 <u>O2 Demand Regulator Checkout (cont)</u>	
		CAUTION Rapid switching of CABIN REPRESS vlv from AUTO to CLOSE, or CLOSE to AUTO, causes loud bang. This does not damage valve. To change CABIN REPRESS vlv position, smooth, slow movement is recommended.	
		CABIN REPRESS vlv - AUTO SUIT GAS DIVERTER vlv - PUSH CABIN	
		2. Verify overhead hatch - closed (docked only)	
		3. Cabin relief & dump vlv (ovhd) - OPEN (docked only)	Depressurizes docking tunnel during cabin depressurization.
		4. PRESS REG B vlv - EGRESS	Cabin fan goes off and SUIT GAS DIVERTER vlv moves to EGRESS position.
		5. Cabin relief & dump vlv (fwd) - OPEN until cabin pressure drops below 4.0 psia (nominal), then AUTO	Activation pressure band for valve opening is between 4.45 and 3.7 psia.
	1,2	MASTER ALARM - on	
	1	CABIN warn lt - on	
	ECS	CABIN REPRESS vlv opens.	Automatic repressurization starts.
	16	6. CB ECS: CABIN REPRESS - open	CABIN REPRESS vlv closes and CABIN warn lt - off when CB ECS: CABIN REPRESS - open or if cabin pressure reaches 4.4 to 5.0 psia.
		7. PRESS REG A vlv - CLOSE	When PRESS REG A and/or B vlv - CLOSE, ensure handle is rotated to full hard stop position.
	1/2	MASTER ALARM pb/lt - reset	
	1	CABIN warn lt - off	
		CAUTION Rapid switching of CABIN REPRESS vlv from AUTO to CLOSE, or CLOSE to AUTO, causes loud bang. This does not damage valve. To change CABIN REPRESS vlv position, smooth, slow movement is recommended.	

CREW-MAN	PNL	PROCEDURES	REMARKS
		4.2.13.6 O2 Demand Regulator Checkout (cont)	
	ECS	8. CABIN REPRESS vlv - CLOSE Cabin relief & dump vlv (fwd) - OPEN until cabin pressure decays to 3.5 psia, then AUTO (4.3 psia in ARS, decaying to 3.8±0.2 psia.)	
		9. PRESS REG B vlv - CLOSE	Cabin fan goes on. When PRESS REG A and/or B vlv - CLOSE, ensure handle is rotated to full hard stop position.
		10. SUIT CIRCUIT RELIEF vlv - OPEN until suit loop pressure decays to 3.5 psia, then AUTO PRESS REG B vlv - EGRESS (Suit loop pressure rises to 3.8±0.2 psia.)	Cabin fan goes off.
		11. PRESS REG B vlv - CLOSE	Cabin fan goes on. When PRESS REG A and/or B vlv - CLOSE, ensure handle is rotated to full hard stop position.
		12. SUIT CIRCUIT RELIEF vlv - OPEN until suit loop pressure decays to 3.5 psia, then AUTO PRESS REG A vlv - EGRESS (Suit loop pressure rises to 3.8±0.2 psia.)	Cabin fan goes off.
	1/2	13. MASTER ALARM pb/lt - reset	
		CAUTION Rapid switching of CABIN REPRESS vlv from AUTO to CLOSE, or CLOSE to AUTO, causes loud bang. This does not damage valve. To change CABIN REPRESS vlv position, smooth, slow movement is recommended.	
	ECS	CABIN REPRESS vlv - AUTO Cabin relief & dump vlv (ovhd) - AUTO (docked only)	
	1,2 16 1	14. PRESS REG B vlv - CABIN MASTER ALARM - on CB ECS: CABIN REPRESS - close CABIN warn lt - on (Suit and cabin pressure begins to rise; CABIN REPRESS vlv opens.)	CABIN REPRESS vlv closes and CABIN warn lt - off when cabin pressure reaches 4.4 to 5.0 psia.

CREW-MAN	PNL	PROCEDURES	REMARKS
		4.2.13.6 O2 Demand Regulator Checkout (cont)	
	1,2 ECS	15. MASTER ALARM pb/lt - reset PRESS REG A vlv - CABIN CABIN GAS RETURN vlv - AUTO SUIT GAS DIVERTER vlv - PUSH CABIN	Cabin fan goes on.
		4.2.13.7 In-Flight O2 Demand Regulator Check (Alternative)	Assumptions: (1) ARS/PGA Pressure Integrity Check (para 4.2.16) has been performed, (2) CSM tunnel hatch closed, (3) CSM pressure equalization valve closed, (4) CSM tunnel vent valve closed, and (5) tunnel is vented.
		WARNING This procedure must not be performed when staged. It may be performed (using descent oxygen) when unstaged.	
	ECS	1. CABIN REPRESS vlv - MANUAL (verify flow), then AUTO	
		2. Cabin relief & dump vlv (ovhd) - AUTO	
	16 ECS	3. CB ECS: CABIN REPRESS - open PRESS REG A & B vlv - EGRESS SUIT GAS DIVERTER vlv - PULL EGRESS CABIN GAS RETURN vlv - EGRESS	
		4. Cabin relief & dump vlv (fwd) - OPEN, then AUTO at 4.5 psia	Suit circuit pressure should follow cabin pressure to 4.5 psia during dump.
		5. SUIT CIRCUIT RELIEF vlv - OPEN & verify suit pressure at 4.5 psia, then CLOSE PRESS REG A vlv - CABIN & verify suit pressure rises to 4.6 to 5.0 psia.	
		6. PRESS REG A vlv - EGRESS SUIT CIRCUIT RELIEF vlv - OPEN until suit pressure decays to 4.5 psia, then CLOSE PRESS REG B vlv - CABIN & verify suit pressure rises to 4.6 to 5.0 psia	

SUBSYS ACT

LM 3215, LM 3222

CREW-MAN	PNL	PROCEDURES	REMARKS
		4.2.13.7 In-Flight 02 Demand Regulator Check (Alternative) (cont)	
	ECS	7. SUIT CIRCUIT RELIEF vlv - AUTO CABIN GAS RETURN vlv - AUTO PRESS REG A vlv - CABIN SUIT GAS DIVERTER vlv - PUSH CABIN	
	2	ECS: CABIN PRESS ind - 4.6 to 5.0 psia (in approx 5 min)	
	16	8. CB ECS: CABIN REPRESS - close Doff helmets & gloves (crew option).	
		9. Doff helmets & gloves Reverse O_2 hoses R/B & B/R SUIT GAS DIVERTER vlv - PULL EGRESS CABIN GAS RETURN vlv - EGRESS PGA DIVERTER vlvs - HORIZONTAL	For water separator speed control
		4.2.14 CREWMAN CONNECT TO LM ECS	Assumption: Suit Fan Activation, Checkout, and Water Separator Check (para 4.2.13.5) has been completed.
		1. Unstow LM umbilical.	
		2. Remove plugs from PGA & stow.	
	PGA	3. Connect 02 umbilical to PGA, inlet to inlet (blue to blue), outlet to outlet (red to red).	
	ECS	4. SUIT ISOL vlv (LMP) - SUIT FLOW or SUIT ISOL vlv (CDR) - SUIT FLOW	
		5. Request CSM shut off 02 flow in transfer umbilical.	
		6. Verify 02 flow to PGA from LM ARS.	
		7. Unstow LCG H20 umbilical.	

LM 3215, LM 3222

CREW-MAN	PNL	PROCEDURES	REMARKS
		4.2.14 CREWMAN CONNECT TO LM ECS (cont) 8. Remove & stow PGA/LCG plug CAUTION Do not connect LM LCG H20 umbilical to PGA if LCG accumulator bob was found to be bottomed during Initial Entry Status Check. 9. Connect LCG H20 umbilical to PGA. 4.2.15 CREWMAN DISCONNECT TRANSFER UMBILICAL 1. Disconnect transfer umbilical 02 connectors from PGA. 2. Remove PGA plugs from 02 umbilical stowage & insert in open PGA 02 receptacles. 3. Release restraints from PGA.	

CREW-MAN	PNL	PROCEDURES	REMARKS
		4.2.15 CREWMAN DISCONNECT TRANSFER UMBILICAL (cont)	
		4. Return transfer umbilical to CSM.	
		5. Return to flight station & attach restraints to PGA.	
		4.2.16 ARS/PGA PRESSURE INTEGRITY CHECK	ARS/PGA Pressure Integrity Check verifies that there are no gross leaks in ARS, PGA, or EMU or in any two or all three of these. Onboard instrumentation (ECS: SUIT PRESS ind and PGA pressure gage) is too coarse to determine exact leakage rates. If one crewman only is connected to ARS, verify other crewman's SUIT ISOL vlv - SUIT DISC.
		CAUTION ARS/PGA Pressure Integrity Check should not be performed until at least 40 minutes after water sublimator activation. To prevent overheating suit circuit fan and/or breakthrough in HTS primary sublimator, ARS/PGA shall not be maintained at elevated pressure for more than 5 minutes.	
LMP	ECS	1. SUIT GAS DIVERTER vlv - PULL EGRESS	Steps 1 and 2 should be performed in sequence. If they are reversed, suit fan may stall and water separator may slow down, causing: MASTER ALARM - on ECS caut lt - on SUIT FAN comp caut lt - on H2O SEP comp caut lt - on
		2. CABIN GAS RETURN vlv - EGRESS	
		3. SUIT CIRCUIT RELIEF vlv - CLOSE	
	2	4. O2/H2O QTY MON sel - DES 2	
		5. ECS: O2 QUANTITY ind - monitor	If ECS: O2 QUANTITY ind - <30%, PRESS REG A vlv - DIRECT O2 to limit time to pressurize to 2 minutes. Both regulators should then be set to EGRESS in step 8. If ECS: O2 QUANTITY ind - <17%, do not depressurize cabin.
	ECS	6. PRESS REG A vlv - EGRESS	
		7. PRESS REG B vlv - DIRECT O2	PRESS REG B vlv may be cycled between CABIN and DIRECT O2 to permit comfortable buildup of pressure.
	PGA ECS	8. When PGA cuff gage indicates 3.7 to 4.0 psig: PRESS REG B vlv - EGRESS	

SUBSY ACT

CREW-MAN	PNL	PROCEDURES	REMARKS
		4.2.16 ARS/PGA PRESSURE INTEGRITY CHECK (cont)	
	PGA	9. Monitor PGA cuff gage for 60 seconds; exercise suit joints during pressure decay period.	If suit pressure decay is excessive, ARS/PGA pressure integrity is compromised: SUIT CIRCUIT RELIEF vlv - AUTO CABIN GAS RETURN vlv - AUTO PRESS REG A vlv - EGRESS PRESS REG B vlv - EGRESS When undocked: PRESS REG A vlv - CABIN PRESS REG B vlv - CABIN
		10. Verify pressure decay <0.3 psig.	
	ECS	11. CO2 CANISTER SEL vlv - SEC	CO2 comp caut lt goes on when CO2 CANISTER SEL vlv - SEC. Pressure drop can be expected when switching between CO2 canisters, due to volume change. If secondary CO2 canister check is not required, omit steps 11 through 16.
		12. ECS: PART PRESS CO2 ind - decays to zero	
		13. If pressure falls below 3.7 psig, repeat steps 7 & 8.	
	PGA	14. Monitor PGA cuff gage for 60 seconds; exercise suit joints during decay period.	
		15. Verify pressure decay <0.3 psig.	
	ECS	16. CO2 CANISTER SEL vlv - PRIM	CO2 comp caut lt - off when CO2 CANISTER SEL vlv-PRIM.
		17. SUIT CIRCUIT RELIEF vlv - AUTO	If integrity check has been performed for EVA, following ARS purge, SUIT CIRCUIT RELIEF vlv must be closed when ECS: SUIT PRESS ind - 5.5 psia. ARS pressure must be maintained above cabin pressure to preclude violating purge until cabin is depressurized to 3.5 psia, at which time SUIT CIRCUIT RELIEF vlv - AUTO.
	2	18. ECS: SUIT PRESS ind - decays to cabin pressure	Returns suit circuit to approximate cabin pressure in 60 seconds. CSM O2 supply makeup is 5.0±0.2 psia. LM O2 supply makeup is 4.8±0.2 psia.
LMP	ECS	19. CABIN GAS RETURN vlv - AUTO	Steps 19 and 20 are not required for EVA preparation.
		20. SUIT GAS DIVERTER vlv - PUSH CABIN	

CREW-MAN	PNL	PROCEDURES	REMARKS
		4.2.16 ARS/PGA PRESSURE INTEGRITY CHECK (cont)	
		21. When LM pressure is regulated by CM or during EVA preparation: PRESS REG B vlv - EGRESS PRESS REG A vlv - EGRESS	
		22. During mission phases other than CM 02 regulation or EVA preparation: PRESS REG B vlv - CABIN PRESS REG A vlv - CABIN	
CDR	11	23. CB ECS: CABIN FAN - open	Steps 23 and 24 are required during EVA preparation (cabin depressurization and hatch opening).
		24. Perform final inspection of EMU; adjust PLSS straps as required.	
		4.2.17 VHF Activation & Checkout	Assumptions: (1) Crewman is wearing PGA, (2) ECS Activation & Checkout (para 4.2.13) has been completed, and (3) crewman is connected to LM ECS. Immediately after VHF activation and checkout, crewman should disconnect from transfer oxygen umbilical.
		CAUTION CB COMM: SE AUDIO must be closed to transmit on VHF A and/or operate DSEA. CB must be opened when LMP connects or disconnects LM comm cable & COMM: TLM BIOMED sw - OFF or LEFT. CB COMM: CDR AUDIO must be closed to transmit voice on VHF B. CB must be opened when CDR connects or disconnects LM comm cable & COMM: TLM BIOMED sw - OFF or RIGHT.	
	12	1. COMM: VHF A XMTR sw - VOICE VHF A RCVR sw - ON VHF B XMTR sw - DATA TLM PCM sw - LO	VHF transceiver warmup is instantaneous.

SUBSYSTEM ACT

CREW-MAN	PNL	PROCEDURES	REMARKS
		4.2.17 VHF Activation & Checkout (cont)	
		2. COMM ANT: VHF sel - FWD	CSM select VHF ANT - SM LEFT
LMP CDR		3. Unstow LMP outboard armrest. or Unstow CDR inboard armrest.	
	8/12	4. AUDIO: VHF A sw - T/R ICS T/R sw - ICS T/R	
	12	COMM: TLM BIOMED sw - OFF VHF A SQUELCH tw - noise + 1 div	Ensure communications cable is not powered. Do not adjust with CSM carrier present.
		5. Verify CSM configured for VHF simplex A.	
		6. Request CSM remove transfer umbilical suit power.	
		7. When headset sounds cease, disconnect transfer umbilical comm cable from PGA & connect LM comm cable to PGA.	
LMP CDR	16 11	8. CB COMM: SE AUDIO - close or CB COMM: CDR AUDIO - close	CB COMM: SE AUDIO and CB COMM: CDR AUDIO supplies power to respective crewman's communication carrier.
		9. Perform VHF comm check with CSM, using PTT on ACA, and PTT/keyer on umbilical.	
		10. Request verification of CSM reception of LM LBR data, if desired.	CSM verification of LM LBR data is as follows: CSM receives data via VHF B, data are recorded on DSE, and recorded data are dumped to MSFN, where they are rerecorded then played back. (CSM has no onboard verification capability.)
		11. Perform intercom check.	Audio volume, VOX sensitivity, and squelch controls should be adjusted, as required, for best results under mission conditions.
		12. AUDIO: MODE sw - VOX	
		13. Perform comm check with CSM, using VOX.	
	8/12	14. AUDIO: MODE sw - ICS/PTT.	

CREW-MAN	PNL	PROCEDURES	REMARKS
		4.2.18 VHF B SIMPLEX CHECK	
		CAUTION CB COMM: SE AUDIO must be closed to transmit on VHF A and/or operate DSEA. CB must be opened when LMP connects or disconnects LM comm cable & COMM: TLM BIOMED sw - OFF or LEFT. CB COMM: CDR AUDIO must be closed to transmit voice on VHF B. CB must be opened when CDR connects or disconnects LM comm cable & COMM: TLM BIOMED sw - OFF or RIGHT.	
		1. Request CSM configure for VHF simplex A & B.	
LMP	12	2. COMM: VHF B XMTR sw - VOICE VHF B RCVR sw - ON	
CDR LMP	8,12	3. AUDIO: VHF A sw - OFF VHF B sw - T/R	
		4. COMM: VHF B SQUELCH tw - noise + 1 div	
CDR, LMP		5. Perform comm check with CSM. (Identify channel as B.) Adjust volume controls as required.	
		6. Request CSM return to VHF simplex A only.	
CDR, LMP	8,12	7. AUDIO: VHF A sw - T/R VHF B sw - OFF	
LMP	12	8. COMM: VHF B XMTR sw - DATA VHF B RCVR sw - OFF	
CDR, LMP		9. Perform comm check with CSM.	

LM 3223

CREW-MAN	PNL	PROCEDURES	REMARKS
		4.2.19 S-BAND ACTIVATION & CHECKOUT, USING OMNI ANTENNA	
LMP	12	1. COMM ANT: S BAND sel - FWD or AFT	Selection of antenna depends on vehicle attitude with respect to earth. Antenna selection to be determined by MSFN.
CDR, LMP	8,12	2. AUDIO: S BAND T/R sw - S BAND T/R	
LMP	16	3. Verify CB COMM: PRIM S BD PWR AMPL - close	
	12	4. COMM: S BAND XMTR/RCVR sw - SEC S BAND PWR AMPL sw - PRIM	S-band transceivers require 30-second warmup time. S-band power amplifiers require 60-second warmup and will lock up within that period. Recycle time for power amplifiers is 20 seconds from resumption of RF drive. Higher gain at lunar distance.
		S BAND VOICE sw - DN VOICE BU S BAND PCM sw - PCM TLM BIOMED sw - OFF	This switch, in either LEFT or RIGHT position, applies power to selected crewman's bioinstrumentation assembly. Power to this switch is supplied through CB COMM: PMP.
		TLM PCM sw - LO	Only LBR telemetry data can be transmitted from S-band omni antennas at lunar distance.
CDR, LMP		5. Perform S-band voice & data check with MSFN. Adjust volume and squelch controls as required.	SIGNAL STRENGTH ind is applicable as indication of uplink phaselock.
LMP	12	6. COMM: VHF B XMTR sw - OFF	
		7. Inform CSM of VHF B data transmission deactivation.	CSM will deactivate LBR data recording.
		4.2.20 S-BAND STEERABLE ANTENNA ACTIVATION AND CHECKOUT	This procedure points S-band steerable antenna at earth center and verifies lock-on. Assumption: MSFN is receiving telemetered ICDU angles in sufficient time to permit MSFN computation of S-band steerable antenna gimbal angles, if necessary (earth orbit only). Steerable antenna position indicators should be used for gross position indications and direction of antenna movement only.

CREW-MAN	PNL	PROCEDURES	REMARKS
		4.2.20 S-BAND STEERABLE ANTENNA ACTIVATION AND CHECKOUT (cont)	
		LGC Power-Up (required)	Ref para 4.6.1.1.
		LGC Self-Test (desired)	Ref para 4.6.1.13.
		IMU Power-Up (LGC Operating) (required)	Ref para 4.6.1.3
		IMU Orientation Determination Program (P51) (required)	Ref para 4.9.1.1.
		DAP Data Load Routine (R03) (required)	Ref para 4.6.1.8 (recommend ±5° deadband).
CDR	1 3	1. Establish PGNCS attitude hold/rate command mode: GUID CONT sw - PGNS S/C: PGNS sw - ATT HOLD PITCH, ROLL, & YAW sw - MODE CONT	Ref para 4.5.1.3.
LMP	12	2. Controls - Communications Basic, except: COMM ANT: S BAND sel - FWD or AFT COMM: S BAND VOICE sw - DN VOICE BU TLM PCM sw - LO TLM BIOMED sw - LEFT or RIGHT	Ref para 4.13.2.1. COMM ANT: S BAND sel setting depends on LM attitude with respect to earth.
		3. Perform S-band voice & LBR data check with MSFN.	Ref para 4.13.2.7.
		4. COMM: S BAND PWR AMPL sw - OFF TLM BIOMED sw - OFF	
		5. Perform S-band voice & LBR data check with MSFN.	Ref para 4.13.2.7.
		6. Perform S-Band Antenna Routine (R05) & omit steps 7 & 8. If R05 cannot be called at this time, perform steps 7 through 10.	Ref para 4.6.1.30.

SUBS ACT

CREW-MAN	PNL	PROCEDURES	REMARKS
		4.2.20 S-BAND STEERABLE ANTENNA ACTIVATION AND CHECKOUT (cont)	
		7. Display ICDU angles & transmit to MSFN: Key V16 N20E R1 OGA XXX.XX° R2 IGA XXX.XX° R3 MGA XXX.XX° Key KEY REL	MSFN uses N20 ICDU angles to compute pitch and yaw gimbal angles. Computation may take up to 15 minutes. Deadband of ±0.3° is assumed to be acceptable for acquisition period when LM is undocked. When LM and CSM are docked, deadband for LM-CSM is assumed acceptable at ±0.5°. Return to deadband of ±5° after acquisition. (Ref para 4.6.1.8.)
		8. Request MSFN transmit S-band steerable antenna pitch & yaw gimbal angles required to point antenna at earth center.	Assumption: There is no change in vehicle inertial attitude after step 8.
	11 16	9. CB/AC BUS B: S BD ANT - close CB COMM: S BD ANT - close	
LMP	12	10. Initial activation: Communications Basic, except: COMM ANT: PITCH cont - -75° YAW cont - -12° TRACK MODE sw - SLEW (wait 30 sec)	
		NOTE To ensure main-lobe acquisition, signal strength indication of >3 is required without peaking COMM ANT: PITCH & YAW cont.	Tests/analysis indicate that antenna track may be achieved at beam angles up to 16.5° from boresight at lunar range, using 30-foot MSFN dish (worst case). This angle corresponds to 3 volts on SIGNAL STRENGTH ind. Antenna shall not be permitted to drive into gimbal stops in either automatic or manual track mode. In automatic track mode, antenna will drive into gimbal stops if uplink signal is interrupted by vehicle maneuvering, orbit behind moon, or ground equipment failure. Condition may also exist in automatic track mode when antenna, in trying to accommodate changes in vehicle attitude, reaches gimbal stop. (This condition is not anticipated.) If any of above occurs, COMM ANT: TRACK MODE sw must be set to OFF and communications resumed via omni antennas. Steerable antenna shall remain in off mode for 10 minutes before reactivating, to permit cooldown.

CREW-MAN	PNL	PROCEDURES	REMARKS
		4.2.20 S-BAND STEERABLE ANTENNA ACTIVATION AND CHECKOUT (cont)	Operation at stops for periods in excess of 3 minutes may result in degraded reliability or failure due to possible overheating. Caution and warning temperature sensor is not expected to react rapidly enough to reflect this thermal transient condition. If uplink signal is interrupted during station handover, depending on length of interruption, antenna may drive to a stop. To prevent this, precautions should be taken against losing carrier during handover.
		PITCH cont - _____ (ccw) YAW cont - _____ (ccw) S BAND sel - SLEW SIGNAL STRENGTH ind - >3 TRACK MODE sw - AUTO SIGNAL STRENGTH ind - approx ≥4.0	Computed angles from MSFN.
		NOTE To ensure main-lobe acquisition, verify increase in SIGNAL STRENGTH ind reading before proceeding with comm check.	
		COMM: S BAND VOICE sw - VOICE TLM PCM sw - HI TLM BIOMED sw - as required	
		11. Perform S-band voice & HBR data check with MSFN.	
		12. COMM: S BAND VOICE sw - DN VOICE BU TLM PCM sw - LO TLM BIOMED sw - as required	
		13. Perform S-band voice & LBR data check with MSFN.	

SUBS ACT

CREW-MAN	PNL	PROCEDURES	REMARKS
		4.2.20 S-BAND STEERABLE ANTENNA ACTIVATION AND CHECKOUT (cont)	
		14. Acquisition procedure for lunar orbit: COMM ANT: PITCH cont - _____(ccw) YAW cont - _____(ccw) S BAND sel - SLEW SIGNAL STRENGTH ind - >3.0 TRACK MODE sw - AUTO SIGNAL STRENGTH ind - approx ≥4.0	Previously computed angles from MSFN. If uplink signal is interrupted during station handover, depending on length of interruption, antenna may drive to a stop. To prevent this, precautions should be taken against losing carrier during handover.
		15. Before MSFN LOS: COMM ANT: PITCH cont - +90° YAW cont - 0° COMM: TLM BIOMED sw - OFF TLM PCM sw - LO S BAND VOICE sw - DN VOICE BU COMM ANT: TRACK MODE sw - OFF S BAND sel - AFT or FWD TRACK MODE sw - SLEW PITCH cont - _____(ccw) YAW cont - _____(ccw)	Computed angles from MSFN.
		16. When comm check complete: COMM ANT: PITCH cont - +90° YAW cont - 0° TRACK MODE sw - SLEW, then OFF when antenna reaches assigned position When MSFN LOS: COMM ANT: PITCH cont - +90° YAW cont - 0° TRACK MODE sw - SLEW S BAND sel - FWD or AFT	

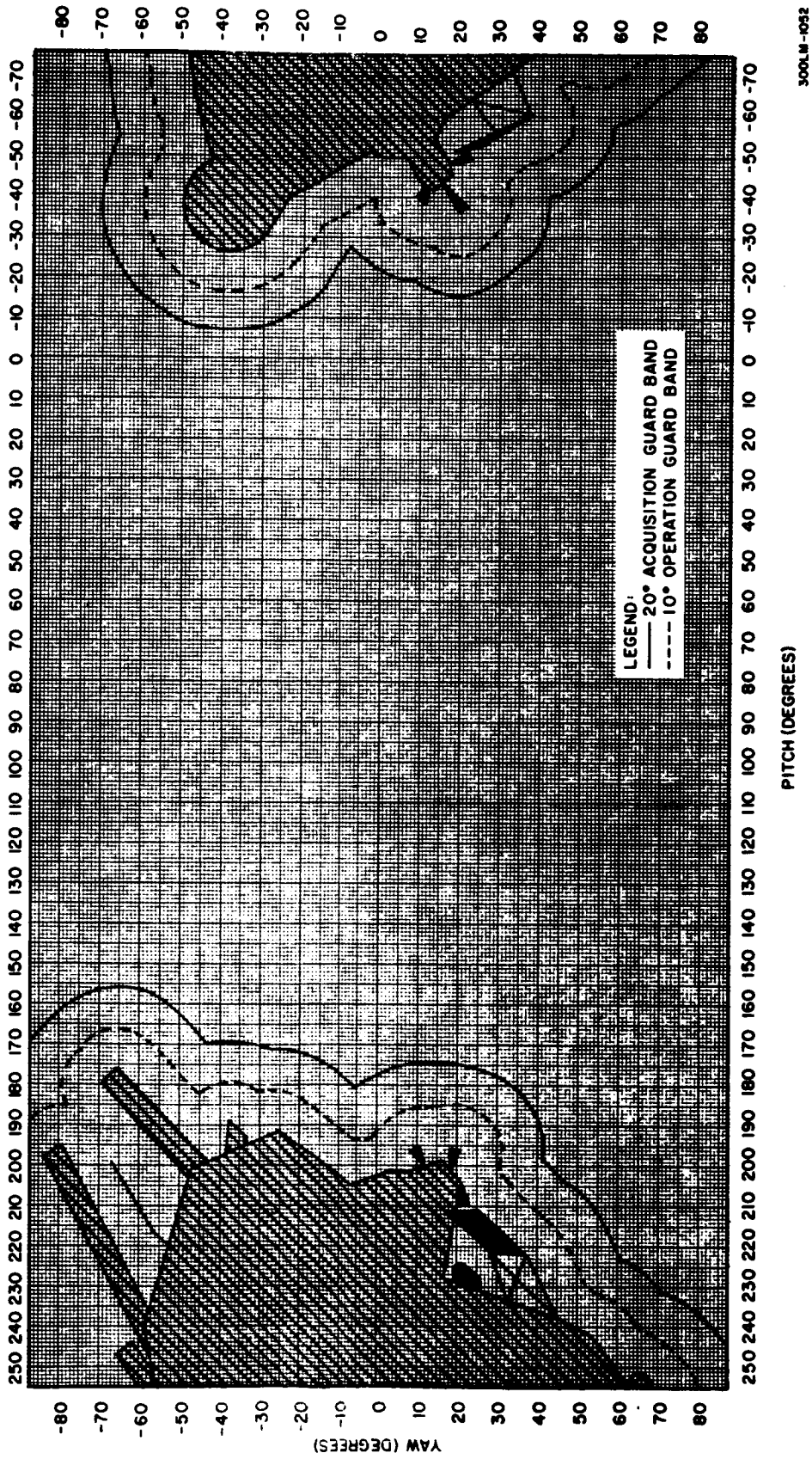

Figure 4-7. S-Band Steerable Antenna Vehicle Blockage Diagram (Relative to RF Boresight)

CREW-MAN	PNL	PROCEDURES	REMARKS
		4.2.21 LOW-POWER S-BAND BACKUP VOICE, LBR CHECK WITH STEERABLE ANTENNA	This procedure points S-band steerable antenna at earth center and verifies lock-on. Assumption: MSFN is receiving telemetered ICDU angles in sufficient time to permit MSFN computation of S-band steerable antenna gimbal angles, if necessary (earth orbit only).
		LGC Power-Up (required)	Ref para 4.6.1.1.
		LGC Self-test (desired)	Ref para 4.6.1.13.
		IMU Power-Up (LGC Operating) (required)	Ref para 4.6.1.3.
		IMU Orientation Determination Program (P51) (required)	Ref para 4.9.1.1.
		DAP Data Load Routine (R03) (required)	Ref para 4.6.1.8 (recommended ±5° deadband).
CDR	1 3	1. Establish PGNCS attitude hold/rate command mode GUID CONT sw - PGNS S/C: PGNS sw - ATT HOLD PITCH, ROLL, & YAW sw - MODE CONT	Ref para 4.5.1.3.
LMP	12	2. Controls - Communications Basic except: COMM ANT: S BAND sel - FWD or AFT COMM: S BAND PWR AMPL sw - OFF S BAND VOICE sw - DN VOICE BU TLM PCM sw - LO TLM BIOMED sw - OFF	Ref para 4.13.2.1. COMM ANT: S-BAND sel setting depends on LM attitude with respect to earth.
		3. Perform S-band voice & LBR data check with MSFN.	Ref para 4.13.2.7.
		4. Perform S-Band Antenna Routine (R05) & skip steps 5 & 6. If R05 cannot be called at this time, perform steps 5 through 10.	Ref para 4.6.1.30.
CDR	4	5. Display ICDU angles & transmit to MSFN: Key V16 N20E R1 OGA XXX.XX° R2 IGA XXX.XX° R3 MGA XXX.XX° Key KEY REL	MSFN uses N20 ICDU angles to compute pitch and yaw gimbal angles. Computation may take up to 15 minutes. Deadband of ±0.3° is assumed to be acceptable for acquisition period when LM is undocked. When LM and CSM are docked, deadband for LM-CSM is assumed acceptable at ±0.5°. Return to deadband of ±5° after acquisition. (Ref para 4.6.1.8.)

CREW-MAN	PNL	PROCEDURES	REMARKS
		4.2.21 LOW-POWER S-BAND BACKUP VOICE, LBR CHECK WITH STEERABLE ANTENNA (cont)	
		6. Request MSFN transmit S-band steerable antenna pitch & yaw gimbal angles required to point antenna at earth center.	Assumption: There is no change in vehicle inertial attitude after step 5.
		7. NOTE To ensure main lobe acquisition, signal strength indication of >3 is required without peaking COMM ANT: PITCH & YAW cont.	
LMP	12	COMM ANT: PITCH cont - _____ (ccw) YAW cont - _____(ccw) S BAND sel - SLEW SIGNAL STRENGTH ind - >3 TRACK MODE sw - AUTO SIGNAL STRENGTH ind - approx ≥4.0	Computed angles from MSFN set in at previous LOS.
		NOTE To ensure main lobe acquisition, verify increase in SIGNAL STRENGTH ind reading before proceeding with comm check.	
		COMM: S BAND VOICE sw - VOICE TLM PCM sw - HI TLM BIOMED sw - as required	
		8. COMM ANT: SIGNAL STRENGTH ind - >3.0	
		NOTE To ensure main-lobe acquisition, >3.0 indication is obtained without peaking COMM ANT: PITCH & YAW cont.	

SUBS AC

CREW-MAN	PNL	PROCEDURES	REMARKS
		4.2.21 LOW-POWER S-BAND BACKUP VOICE, LBR CHECK WITH STEERABLE ANTENNA (cont)	
		TRACK MODE sw - AUTO	Antenna shall not be permitted to drive into gimbal stops in either automatic or manual track mode. In automatic track mode, antenna will drive into gimbal stops if uplink signal is interrupted by vehicle maneuvering, orbit behind moon, or ground equipment failure. Condition may also exist in automatic track mode when antenna, in trying to accommodate changes in vehicle attitude, reaches gimbal stop. (This condition is not anticipated.) If any of above occurs, COMM ANT: TRACK MODE sw must be set to OFF and communications resumed via omni antennas. Steerable antenna shall remain in off mode for 10 minutes before reactivating, to permit cooldown. Operation at stops for periods in excess of 3 minutes may result in degraded reliability or failure due to possible overheating. Caution and warning temperature sensor is not expected to react rapidly enough to reflect this thermal transient condition. If uplink signal is interrupted during station handover, depending on length of interruption, antenna may drive to a stop. To prevent this, precautions should be taken against losing carrier during handover.
		SIGNAL STRENGTH ind - approx $\geq$4.0 COMM: S BAND VOICE sw - DN VOICE BU TLM PCM sw - LO	
		9. Perform S-band voice & HBR data check with MSFN.	
		10. When comm check complete: COMM ANT: PITCH cont - +90° YAW cont - 0° TRACK MODE sw - SLEW, then OFF when antenna reaches assigned position When MSFN LOS: COMM ANT: PITCH cont - +90° YAW cont - 0° TRACK MODE sw - SLEW S BAND sel - FWD or AFT	

LM 3223

CREW-MAN	PNL	PROCEDURES	REMARKS
		4.2.22 S-BAND RANGING, VOICE, AND TELEMETRY CHECK	Ranging check is performed at MSFN direction. Check consists of transmission of PRN range code from MSFN and receipt of turnaround signal.
		S-Band Steerable Antenna Activation and Checkout	Ref para 4.2.20. If MSFN does not transmit 30-kc subcarrier to LM during ranging, LM must set AUDIO: S BAND T/R sw (2) to OFF. (This is only necessary when COMM: UP LINK SQUELCH sw - OFF.)
LMP	12	1. COMM: S BAND XMTR/RCVR sw - SEC S BAND PWR AMPL sw - PRIM S BAND VOICE sw - VOICE S BAND PCM sw - PCM S BAND RANGE sw - RANGE TLM BIOMED sw - LEFT or RIGHT TLM PCM sw - HI	This switch, in either LEFT or RIGHT position, applies power to selected crewman's bioinstrumentation assembly. Power to this switch is supplied through CB COMM: PMP. SIGNAL STRENGTH ind is applicable as indication of uplink phaselock.
		2. Verify ranging, voice, & telemetry check.	
		3. When directed by MSFN: COMM: S BAND RANGE sw - OFF/RESET	
		4.2.23 S-BAND FM CHECK	
		S-Band Steerable Antenna Activation and Checkout	Ref para 4.2.20.
LMP	12	1. COMM: S BAND MODULATE sw - FM S BAND XMTR/RCVR sw - SEC S BAND PWR AMPL sw - PRIM S BAND VOICE sw - VOICE S BAND PCM sw - PCM TLM PCM sw - HI	S-band transceiver warmup time is 5 seconds after change of modulation.
		2. Perform S-band voice & HBR data check with MSFN.	
		3. COMM: S BAND MODULATE sw - PM	
		4. Perform S-band voice & HBR data check with MSFN.	

SUBS ACT

LM 3223

CREW-MAN	PNL	PROCEDURES	REMARKS
		4.2.24 SECONDARY MODE S-BAND TRANSCEIVER & POWER AMPLIFIER CHECK	
		S-Band Steerable Antenna Activation and Checkout	Ref para 4.2.20.
CDR	11	1. Verify: CB COMM: SEC S BD XMTR/RCVR - close SEC S BD PWR AMPL - close	
LMP	16	2. Verify: CB COMM: PRIM S BD PWR AMPL - close PRIM S BD XMTR/RCVR - close	
	12	3. COMM: S BAND XMTR/RCVR sw - PRIM S BAND VOICE sw - VOICE	S-band transceivers require 30-second warmup time.
		4. Perform S-band voice & HBR data check with MSFN.	
		5. COMM: S BAND PWR AMPL sw - SEC	S-band power amplifiers require 60-second warmup and will lock up within that period. Recycle time for power amplifiers is 20 seconds from resumption of RF drive. MSFN verifies power increase with power amplifier in operation.
		6. Perform S-band voice & HBR data check with MSFN.	
		7. COMM: S BAND XMTR/RCVR sw - SEC S BAND PWR AMPL sw - PRIM	
		8. COMM: TLM PCM sw - HI	
		9. Perform S-band voice & HBR data check with MSFN.	

LM 3237A

CREW-MAN	PNL	PROCEDURES	REMARKS
		4.2.25 S-BAND BACKUP VOICE & KEYING CHECK	Hot mike condition exists on S-band when operating in S-band backup voice mode.
LMP	12	1. COMM: S BAND MODULATE sw - PM S BAND PWR AMPL sw - PRIM S BAND VOICE sw - DN VOICE BU S BAND PCM sw - OFF TLM BIOMED sw - OFF COMM ANT: S BAND sel - FWD or AFT	If COMM: S BAND MODULATE sw - FM and COMM: S BAND VOICE sw - DN VOICE BU, PMP automatically switches to PM mode. If FM mode is desired for normal voice operations after backup voice check, and COMM: S BAND MODULATE sw has been left in FM position, switch must be cycled through PM and back to FM to reset transmitter modulator.
		2. Perform S-band voice check with MSFN.	
		3. COMM: S BAND PWR AMPL sw - OFF S BAND PCM sw - KEY	
	16	4. CB COMM: PMP - open	All down voice and PCM transmission capability is lost. CW (key) signal transmission capability exists only when CB COMM: PMP - open.
		5. Perform code check with MSFN, using PTT/keyer on umbilical. Request (via code) that MSFN verify, on up voice, that code is received.	
	16	6. CB COMM: PMP - close	
		7. Perform S-band Steerable Antenna Activation and Checkout	Ref para 4.2.20.
		4.2.26 ASCENT BATTERY ACTIVATION & CHECKOUT	Load of 40 amperes should be on line before performing this task.
CDR	11	1. CB EPS: ASC ECA CONT - close ASC ECA - close	
LMP	16	2. CB EPS: ASC ECA - close ASC ECA CONT - close	

CREW-MAN	PNL	PROCEDURES	REMARKS
		4.2.26 ASCENT BATTERY ACTIVATION & CHECKOUT (cont) CAUTION Verify that high-voltage tap of descent batteries has been selected before placing ascent batteries on line.	
	14	3. Check Lunar battery and place both ascent batteries on line: EPS: POWER/TEMP MON sel - LUNAR BAT VOLTS ind - 37.0 to 37.2 vdc AMPS ind - 0 amp LMP LUNAR BAT sw - OFF/RESET; tb - bp, then ON; tb - LMP POWER/TEMP MON sel - LUNAR BAT VOLTS ind - 28.0 to 32.5 vdc AMPS ind - TBD LMP LUNAR BAT sw - OFF/RESET; tb - bp POWER/TEMP MON set - BAT 5 VOLTS ind - 37.0 to 37.2 vdc AMPS ind - 0 amp BAT 5 NORMAL LMP FEED sw - ON; tb - gray VOLTS ind - 28.0 to 32.5 vdc AMPS ind - TBD LMP BAT 1 HI V sw - OFF/RESET; tb - bp CDR LUNAR BAT sw - OFF/RESET; tb - bp, then ON; tb - CDR POWER/TEMP MON sel - LUNAR BAT VOLTS ind - 28.0 to 32.5 vdc AMPS int - TBD CDR LUNAR BAT sw - OFF/RESET; tb - bp POWER/TEMP MON sel - BAT 6 VOLTS ind - 37.0 to 37.2 vdc AMPS ind - 0 amp BAT 6 NORMAL CDR FEED sw - ON; tb - gray VOLTS ind - 28.0 to 32.5 vdc AMPS ind - TBD CDR BAT 4 HI V sw - OFF/RESET; tb - bp PWR/TEMP MON sel - LMP bus, then CDR bus VOLTS ind - 26.5 to 32.5 vdc	Due to reverse current, BATTERY caut lt may go on when ascent and descent batteries are paralleled. This is not to be regarded as malfunction symptom unless light remains on longer than approximately 15 seconds.

CREW-MAN	PNL	PROCEDURES	REMARKS
		4.2.26 ASCENT BATTERY ACTIVATION & CHECKOUT (cont)	
		CAUTION To avoid transients, remove descent batteries, one at a time, from line at intervals of no less than 3 sec.	
		4. Check backup feed path from both ascent batteries: EPS: BAT 5 BACK UP CDR FEED sw - ON; tb - gray BAT 6 BACK UP LMP FEED sw - ON; tb - gray BAT 5 NORMAL LMP FEED sw - OFF/RESET; tb - bp BAT 6 NORMAL CDR FEED sw - OFF/RESET; tb - bp POWER/TEMP MON sel - CDR BUS then LMP bus VOLTS ind - 26.5 to 32.5 vdc	Ascent battery will be placed on line for minimum of 5 minutes or until battery current is stabilized, to check load-carrying capability if open-circuit voltage <32 vdc.
		5. Place all four descent batteries on line: EPS: LMP BAT 1 HI VOLT & 2 sw - ON; tb - gray CDR BAT 3 & 4 HI VOLT sw - ON; tb - gray POWER/TEMP MON sel - BAT 1 AMPS ind - TBD Repeat for BAT 2, BAT 3 & BAT 4	To obtain proper current measurements when monitoring descent battery, divide indicator reading by 2.
		6. Remove both ascent batteries from line: EPS: BAT 5 BACK UP CDR FEED sw - OFF/RESET; tb - bp BAT 6 BACK UP SE FEED sw - OFF/RESET; tb - bp	Electrical Power Subsystem is now in normal descent battery configuration.

CREW-MAN	PNL	PROCEDURES	REMARKS
		4.2.26 ASCENT BATTERY ACTIVATION & CHECKOUT (cont)	
	16	7. CB EPS: ASC ECA CONT - open	
CDR	11	8. CB EPS: ASC ECA CONT - open	
		4.2.27 APS TEMP/PRESS PREPRESSURIZATION CHECK	Assumption: Circuit Breaker Activation (para 4.2.4) is completed. Procedure is performed before lunar launch.
		1. HELIUM MON sel - PRESS 1 MPS: HELIUM ind - 2800 to 3500 psia	Ascent helium tank pressure values as a function of time remain approximately the same as initial tank loading conditions. For expected tank pressure as function of tank temperature and initial loading conditions, see figure 4-8.
		2. HELIUM MON sel - PRESS 2 MPS: HELIUM ind - 2800 to 3500 psia	
		3. PRPLNT TEMP/PRESS MON sw - ASC MPS: FUEL TEMP ind - 50° to 90° F OXID TEMP ind - 50° to 90° F FUEL PRESS ind - 108 to 172 psia OXID PRESS ind - 71 to 143 psia	

CREW-MAN	PNL	PROCEDURES	REMARKS
		4.2.28 DPS TEMP/PRESS PREPRESSURIZATION CHECK	Assumption: Circuit Breaker Activation (para 4.2.4) is completed.
CDR	1	1. HELIUM MON sel - AMB PRESS MPS: HELIUM ind - 1490 to 1750 psia	This pressure range represents minimum-to-maximum descent ambient helium bottle pressures before pressurization, as function of helium temperature and loading mass. For other bottle pressure values, see figure 4-9.
		2. HELIUM MON sel - SUPCRIT PRESS MPS: HELIUM ind - 750 to 1320 psia	This pressure range is based on supercritical helium loading temperature of -453°F and mass of 48 pounds at 120 psia. Specific pressure before pressurization is function of total elapsed time from tank loading to pressurization, multiplied by expected pressure rise (6 to 10 psia/hr.) For other tank pressures, see figure 4-10. The supercritical helium tank burst-disk rupture pressure is 1881 to 1967 psia.
		3. HELIUM MON sel - AMB PRESS	
		4. PRPLNT TEMP/PRESS MON sw - DES 2 MPS: FUEL TEMP ind - 50° to 75° F OXID TEMP ind - 50° to 75° F FUEL PRESS ind - 70 to 122 psia OXID PRESS ind - 41 to 78 psia	Due to increased DPS propellant loading, and therefore decreased ullage space, DPS regulator can be damaged during pressurization if FUEL or OXID TEMP ind - >75°F.
		5. PRPLNT TEMP/PRESS MON sw - DES 1 MPS: FUEL TEMP ind - 50° to 75° F OXID TEMP ind - 50° to 75° F FUEL PRESS ind - 70 to 122 psia OXID PRESS ind - 41 to 78 psia	Due to increased DPS propellant loading, and therefore decreased ullage space, DPS regulator can be damaged during pressurization if FUEL or OXID TEMP ind - >75°F.
		6. PRPLNT QTY MON sw - DES 1 MPS: FUEL QUANTITY ind - 95% or less OXID QUANTITY ind - 95% or less Verify readings are within 0.5% of telemetry values.	Exact values cannot be predetermined due to propellant sloshing under zero g.
		7. PRPLNT QTY MON sw - DES 2 Repeat procedure of step 6.	
		8. PRPLNT QTY MON sw - OFF	

SUBSYS ACT

CREW-MAN	PNL	PROCEDURES	REMARKS
		4.2.28 DPS TEMP/PRESS PREPRESSURIZATION CHECK (cont)	
		9. PRPLNT TEMP/PRESS MON sw - DES 1	
		10. DES He REG 1 tb - gray DES He REG 2 tb - bp	DES He REG latching valve is open when tb - gray. DES He REG latching valve is closed when tb - bp.
		4.2.29 DPS PRESSURIZATION & CHECKOUT	Assumption: Prepressurization check of DPS and APS has been performed at appropriate time in mission.
CDR	8	1. ED: MASTER ARM sw- ON DES PRPLNT ISOL VLV sw - FIRE DES START He PRESS sw - FIRE MASTER ARM sw - OFF	Possible MASTER ALARM - on when ED: MASTER ARM sw - OFF, due to relay race removing CWEA inhibit.
		2. HELIUM MON sel - AMB PRESS MPS: HELIUM ind - 200 to 1100 psia	
		3. HELIUM MON sel - SUPCRIT PRESS MPS: HELIUM ind - 750 to 1320 psia	
		4. PRPLNT TEMP/PRESS MON sw - DES 1 MPS: FUEL TEMP ind - 50° to 90° F OXID TEMP ind - 50° to 90° F FUEL PRESS ind - 200 to 250 psia OXID PRESS ind - 200 to 250 psia	Following values apply to pressure relief valve assembly: Burst-disk rupture pressure - 260 to 275 psia Reseat pressure - 254 psia Relief valve cracking pressure - 260 psia Below 40°F, engine operation is rough. Above 100°F, oxidizer decomposes, driving oxidizer-fuel ratio out of tolerance. Engine will not operate with smooth and efficient combustion with ΔT F/O >10°F. Due to increased DPS propellant loading, and therefore decreased ullage space, DPS regulator can be damaged during pressurization if FUEL or OXID TEMP ind - >75°F.
		5. PRPLNT TEMP/PRESS MON sw - DES 2 MPS: FUEL TEMP ind - 50° to 90° F OXID TEMP ind - 50° to 90° F FUEL PRESS ind - 200 to 250 psia OXID PRESS ind - 200 to 250 psia	Due to increased DPS propellant loading, and therefore decreased ullage space, DPS regulator can be damaged during pressurization if FUEL or OXID TEMP ind - >75°F.
		6. PRPLNT TEMP/PRESS MON sw - DES 1	

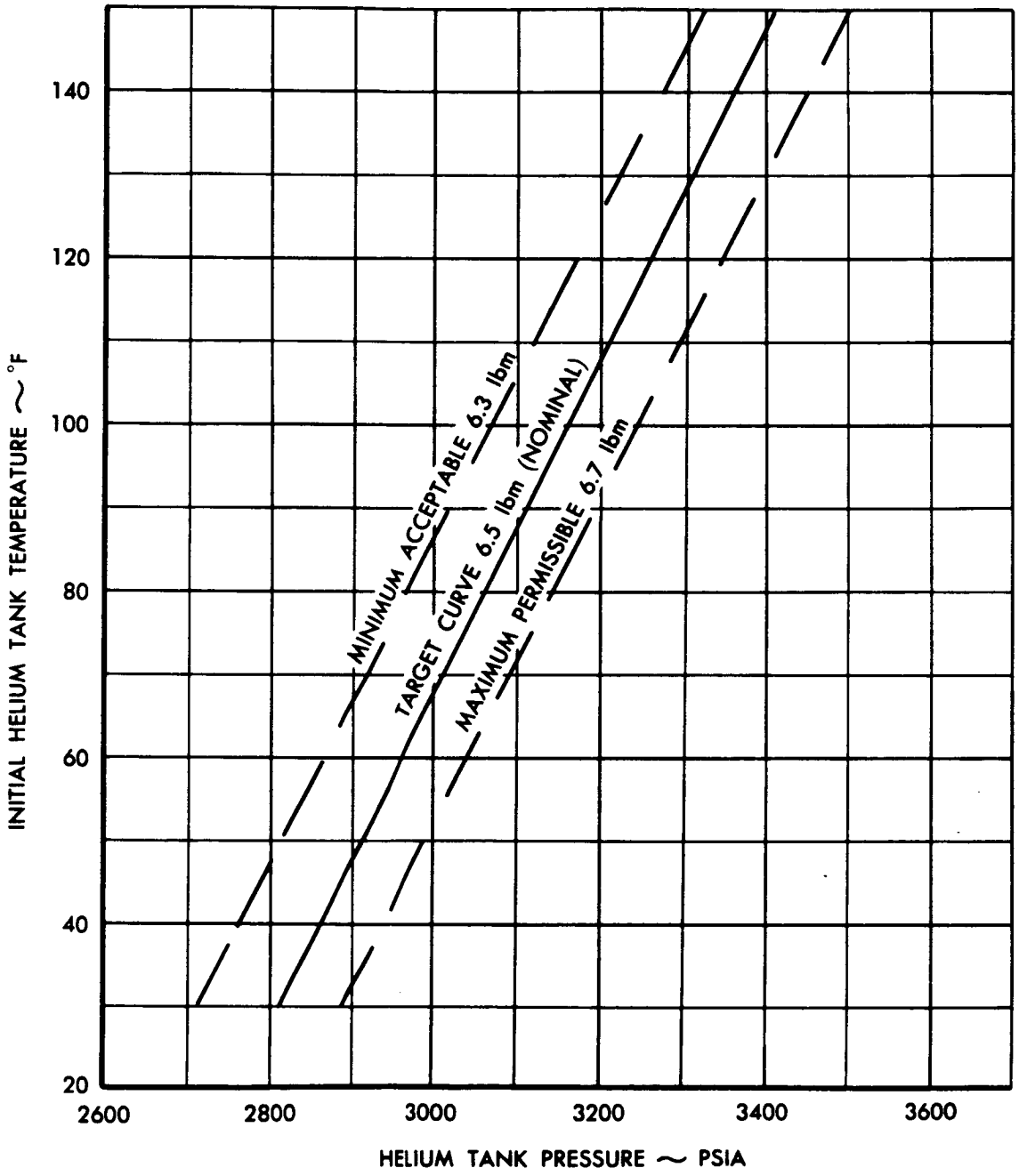

300LM4-557

Figure 4-8. Ascent Helium Loading

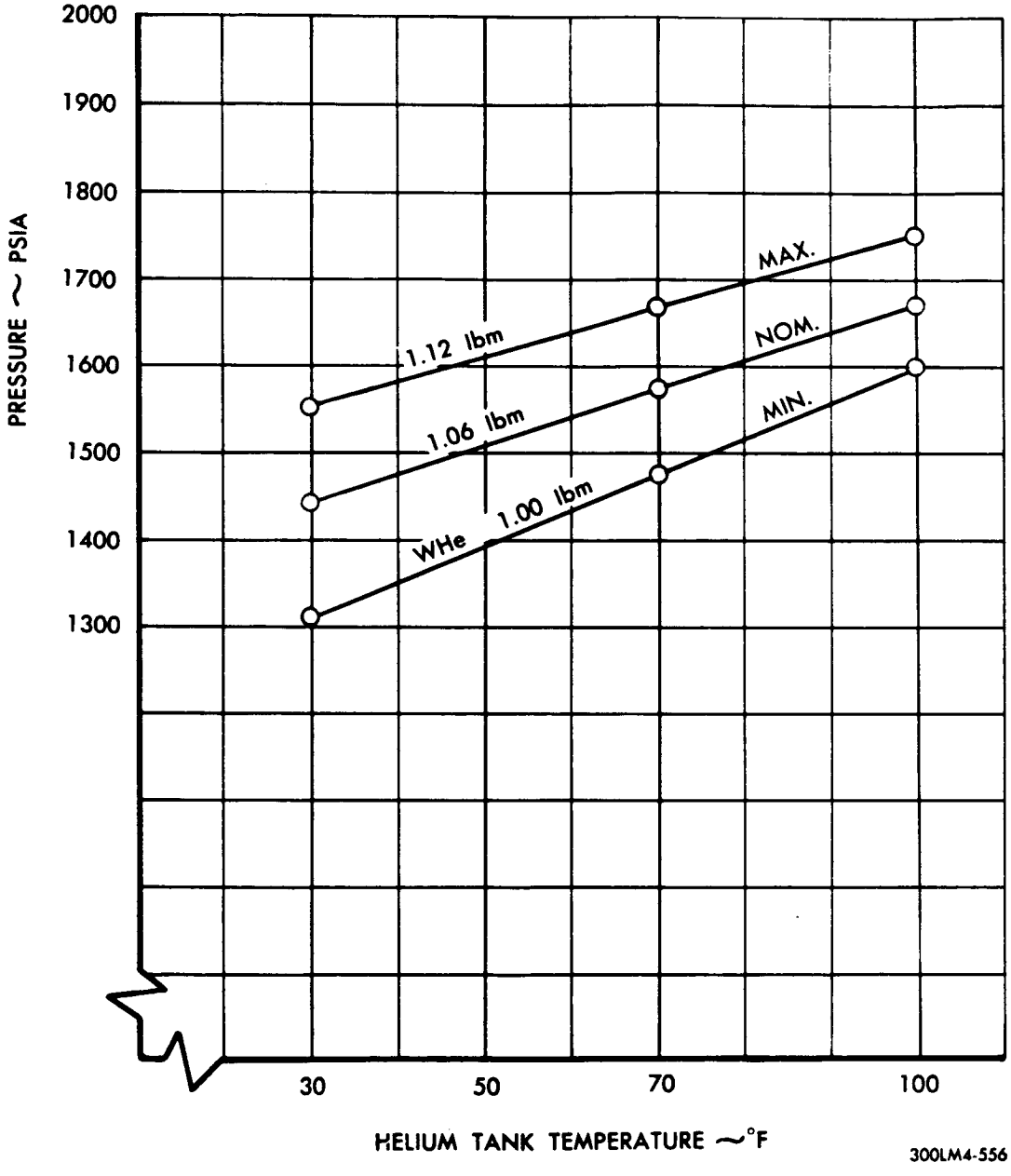

Figure 4-9. Descent Ambient Helium Bottle Loading

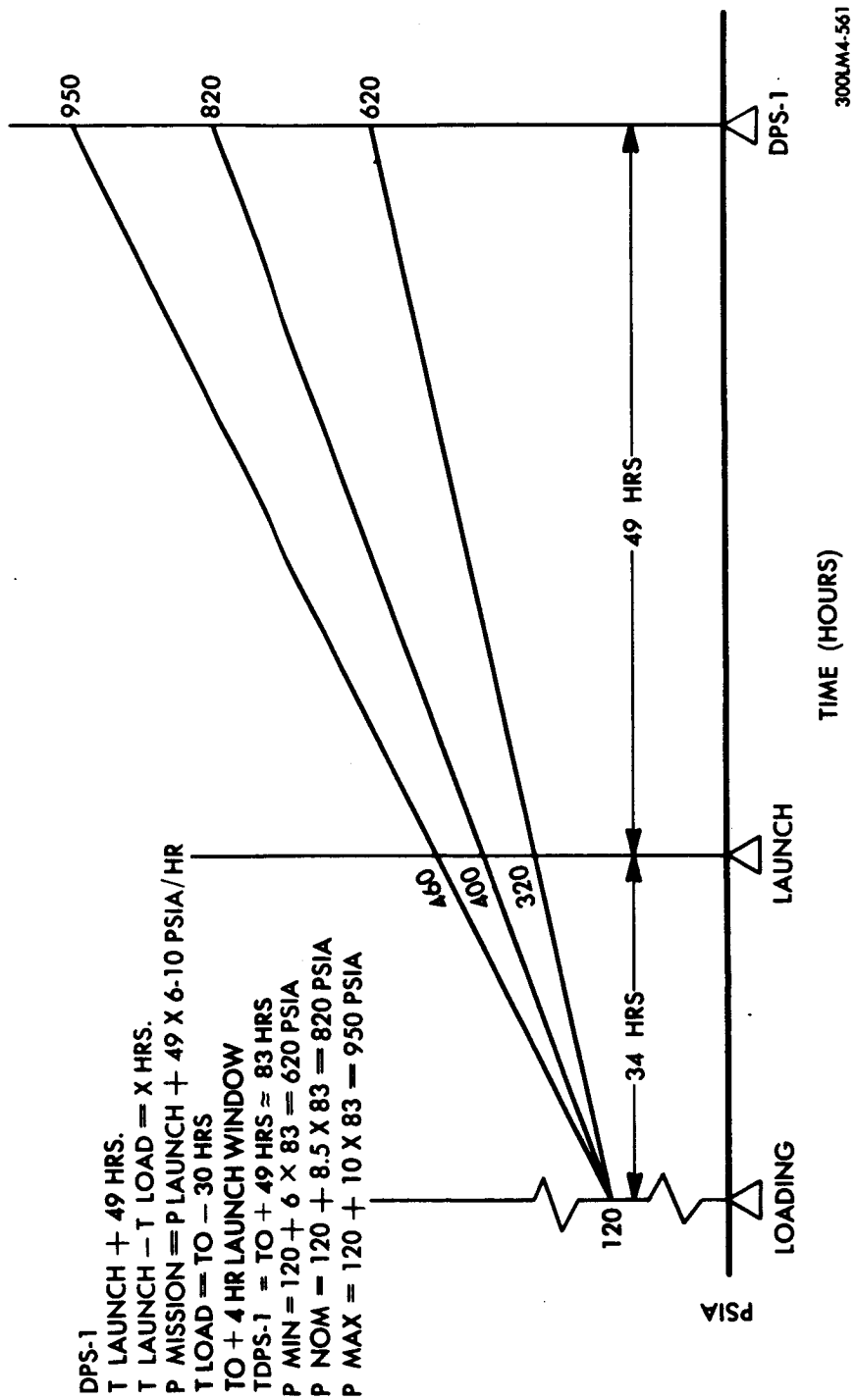

Figure 4-10. Theoretical Supercritical Helium Prepressurization

CREW-MAN	PNL	PROCEDURES	REMARKS
		4.2.30 RCS PRESSURIZATION	This procedure is applicable if LM is launched with all main SOV's open. After 5-hour cold soak, warmup time for RCS thrusters before firing is approximately 1 hour with both sets of heaters operating; 3.2 hours if only one set is operating.
LMP	3	1. HTR CONT: TEMP MON sel - RCS QUAD 1, 2, 3, & 4 TEMP ind - 120° to 145°F (for each quad)	
	2	2. RCS: A & B QUANTITY ind - 100%	CB RCS SYS B: PQGS/DISP must be closed for 1 minute to obtain valid reading. Quantity display remains at 100% until propellants in lines are used. Overall quantity accuracy (including propellant quantity measuring device accuracy) is ± 9%.
		3. RCS: TEMP/PRESS MON sel - He A & B PRESS ind - 2820 to 3280 psia	This range represents minimum-to-maximum RCS theoretical helium bottle loading envelope pressure, before pressurization, as function of helium temperature and loading mass. For other bottle pressure values, see figure 4-11.
		4. RCS: TEMP/PRESS MON sel - PRPLNT A & B TEMP ind - 40° to 100°F A & B PRESS ind - 10 to 50 psia	
		5. RCS: TEMP/PRESS MON sel - FUEL MANF A & B PRESS ind - 25 to 90 psia	
		6. RCS: TEMP/PRESS MON sel - OXID MANF A & B PRESS ind - 25 to 90 psia	
		CAUTION RCS SYS A & B ASC FEED 2 vlvs must be closed immediately after ED: RCS He PRESS sw - FIRE, to prevent possible propellant transfer between APS & RCS.	During RCS pressurization, it is possible for ascent feed 2 valve to become unseated, allowing propellant transfer between APS & RCS. Closing RCS system A & B ascent feed 2 valves ensures that they are still closed after pressurization.

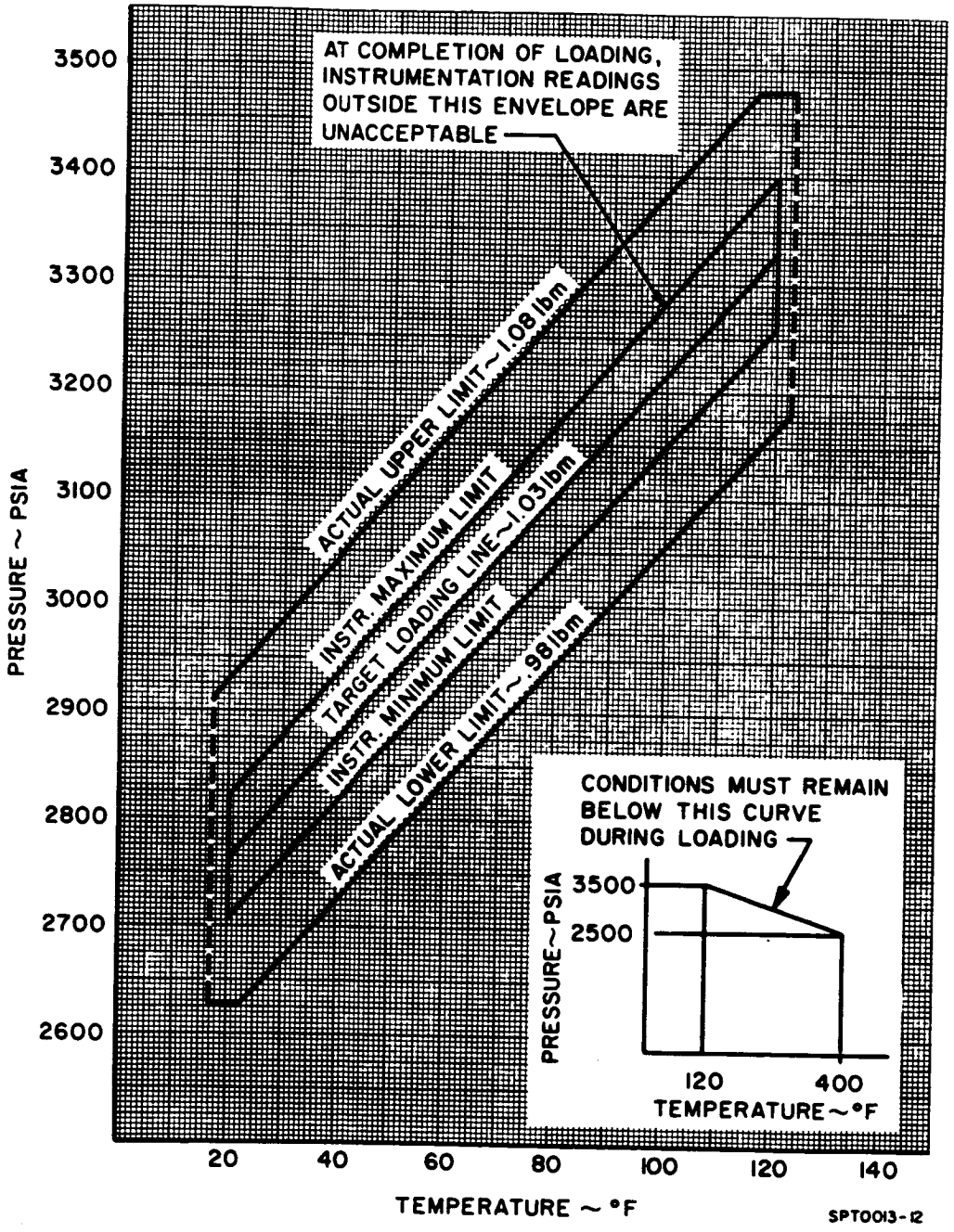

Figure 4-11. RCS Theoretical Helium Bottle Loading Envelope, Pressure vs Temperature

CREW-MAN	PNL	PROCEDURES	REMARKS
		4.2.30 RCS PRESSURIZATION (cont)	
	16 8	7. CB ED: LOGIC PWR B - open ED: MASTER ARM sw - ON RCS He PRESS sw - FIRE	Permits verification of ED system A.
	2	RCS: SYS A ASC FEED 2 sw - CLOSE SYS B ASC FEED 2 sw - CLOSE	
	8	ED: MASTER ARM sw - OFF	
LMP	16	CB ED: LOGIC PWR B - close	
		CAUTION CB ED: LOGIC PWR A & LOGIC PWR B must be closed at completion of this task.	
	1	RCS A REG warn lt - off RCS B REG warn lt - off	
	2	8. RCS: SYS A ASC FEED 1 sw - ASC FEED 1 SYS B ASC FEED 1 sw - ASC FEED 1 CRSFD sw - CLOSE; tb - bp	Procedure confirms that all valves are actually open. When valve control switch is in center position, associated tb correctly indicates valve position. When switch is in an off-center position: a. CRSFD, & MAIN SOV tb's are gray. b. ASC FUEL & ASC OXID tb's are gray unless unenergized ASC FEED valves in same system are closed; then tb's are bp.
	2	9. RCS: TEMP/PRESS MON sel - OXID MANF A & B PRESS ind - 175 to 188 psia	Fuel and oxidizer nominal operating pressure is 178 to 188 psia. Burst disks rupture at 220±7 psia. Relief valves crack at 232±8 psia and reseat at 212 psia.
		10. RCS: TEMP/PRESS MON sel - FUEL MANF A & B PRESS ind - 175 to 188 psia	
		11. RCS: TEMP/PRESS MON sel - PRPLNT A & B TEMP ind - 40° to 100° F A & B PRESS ind - 178 to 188 psia	

CREW-MAN	PNL	PROCEDURES	REMARKS
		4.2.30 RCS PRESSURIZATION (cont)	
		12. RCS: TEMP/PRESS MON sel - He A & B PRESS ind - 2750 to 3200 psia	Nominal helium tank pressure before pressurization is 3050 psia at +70°F.
		13. RCS: A QUANTITY ind - record % remaining_____% B QUANTITY ind - record % remaining_____%	
		4.2.31 RCS HOT/COLD FIRING CHECK	This procedure can be used before undocking and before lunar lift-off.
		CAUTION Docking tunnel pressure (CSM side) must be zero psia. CSM roll jet commands must be inhibited to prevent possible simultaneous opposing jets firing.	This procedure performs TTCA (PGNS and AGS) Cold Fire, PGNS Rate Command Cold Fire, AGS Pulse Cold Fire, AGS Rate Command Cold Fire, Four-Jet Secondary Coil Hot Fire, and PGNS Minimum Impulse Hot Fire. It must be performed during MSFN contact to verify: a. TTCA continuity b. 2.5° contacts in ACA c. 12° hardover contact in ACA d. ACA transducer operation e. ACA continuity f. LGC inbits and outbits g. Operation of primary preamplifiers h. Operation of primary and secondary coils i. Inputs to ATCA jet select logic This procedure only checks CDR's ACA and TTCA systems.
		Communications Basic (required - near earth)	Ref para 4.13.2.1.
		S-Band Steerable Antenna Activation and Checkout (required)	Ref para 4.2.20.
		LGC Power-Up (required)	Ref para 4.6.1.1.
		IMU Power-Up (LGC Operating) (required)	Ref para 4.6.1.3.
		Circuit Breaker Activation (required)	Ref para 4.2.4.

CREW-MAN	PNL	PROCEDURES	REMARKS
		4.2.31 RCS HOT/COLD FIRING CHECK (cont)	
	3	1. Verify quad temperature: HTR CONT: TEMP MON sel - RCS QUAD 1, 2, 3, & 4 TEMP ind - 120° to 190° F	
		CAUTION HEATER caut lt must be off for 25 minutes before firing RCS thrusters.	
CDR LMP	11 16	2. CB RCS SYS A: QUAD 1, 2, 3, 4 TCA - open CB RCS SYS B. QUAD 1, 2, 3, 4 TCA - open	
		NOTE Poss MASTER ALARM, RCS TCA warn lt - on, tb - red during steps 3 thru 6.	
	1 3 4 TTCA	3. GUID CONT sw - PGNS ACA PROP sw (CDR) - ENABLE S/C: ROLL, PITCH, & YAW sw - PULSE PGNS sw - ATT HOLD AGS sw - ATT HOLD ACA/4 JET sw (CDR) - DISABLE TTCA/TRANSL sw (CDR) - ENABLE THROTTLE/JETS cont (BOTH) - JETS Verify HBR with MSFN: CSM WIDE DEADBAND, ATT HOLD	
	4	4. TTCA cold fire check: Key V76E V11 N10E, 5E	Displays contents of channel No. 5 to verify presence of LGC jet-on commands (up and down firing).
	TTCA	TTCA (CDR) - deflect, release Monitor DSKY R1: Up (+X) - R1 00252 Down (-X) - R1 00125 Repeat Up, down deflection using LMP's TTCA	MSFN verifies presence of AGS translational commands via GH1240.

CREW-MAN	PNL	PROCEDURES	REMARKS
		4.2.31 RCS HOT/COLD FIRING CHECK (cont)	
	4	Key E6E	Displays contents of channel No. 6 to verify presence of LGC jet-on commands (right, left, forward, and aft firing).
	TTCA	TTCA (CDR) - deflect, release Monitor DSKY R1: Right (+Y) - R1 00220 Left (-Y) - R1 00140 Forward (+Z) - R1 00011 Aft (-Z) - R1 00006	MSFN verifies presence of AGS translational commands via GH1241 and GH1242.
CDR		5. PGNS Rate Command Cold Fire, AGS Pulse Cold Fire	
	11	CB S/C: ATT DIR CONT - close	
	4	Key V77E Key V15 N01E 42E	Displays octal content of LGC rate command counters in R1, R2, and R3.
	ACA	ACA (CDR) - to soft stop, pause (2 sec) at null Roll right - R3 00045 to 00057 Roll left - R3 77720 to 77732 Pitch up - R1 00045 to 00057 Pitch down - R1 77720 to 77732 Yaw right - R2 77720 to 77732 Yaw left - R2 00045 to 00057	MSFN verifies presence of AGS pulse mode commands via GH1247, GH1248, and GH1249.
		6. AGS Rate Command Cold Fire, Four-Jet Secondary Coil Hot Fire	
	1	GUID CONT sw - AGS	
	3	S/C: ROLL, PITCH, & YAW sw - MODE CONT Verify RCS quad temperature $\geq$120°F for 25 min before proceeding.	
	ACA	ACA (CDR) - deflect slowly to hardover, pause (2 sec) at null Roll right Roll left Pitch up Pitch down Yaw right Yaw left	MSFN monitors thrust chamber pressure (GR5031 through GR5046) to verify hardover contact closure and secondary coil operation; also verifies presence of AGS rate command output via GH1247, GH1248, and GH1249.

LM 3231

CREW-MAN	PNL	PROCEDURES	REMARKS
		4.2.31 RCS HOT/COLD FIRING CHECK (cont)	
		7. PGNS Minimum Impulse Hot Fire	
	1	GUID CONT sw - PGNS	
	4	Key V76E	
		Key V48E	
		FL V04 N46	
		Verify DAP configuration - 32022	Ref para 4.6.1.8.
		Key PRO	
		Key V34E	
CDR	11	CB RCS SYS A: QUAD 4, 3, 2, & 1 TCA - close	
LMP	16	CB RCS SYS B: QUAD 1, 2, 3, & 4 TCA - close	
		CB INST: CWEA - open, then close	
	2	RCS: SYS A & B QUAD 1, 2, 3, & 4 tb (8) - gray	
	4	Key V11 N10E 31E	Displays contents of channel No. 31 to check presence of minimum impulse inbits. MSFN monitors jet driver output (GH1418 through GH1433) and thrust chamber pressure (GR5031 through GR5046) to verify primary coil operation. Four yaw maneuvers ensures firing of all eight horizontal RCS jets.
		Verify: R1 67777	
	ACA	ACA (CDR) - deflect 2.5°, pause (2 sec) at null	
		Roll right - R1 27757	
		Roll left - R1 27737	
		Yaw right - R1 27767	
		Yaw right - R1 27767	
		Yaw left - R1 27773	
		Yaw left - R1 27773	
		Key V48E	
		FL V04 N46	
		Establish DAP configuration - Key V21E 31022E	
		Key PRO	
		Key V34E	
	ACA	ACA (CDR) - deflect 2.5°, pause (2 sec) at null	MSFN monitors jet driven output (GH1418 through GH1433) and thrust chamber pressure (GR5031 through GR5046) to verify primary coil operation.
		Pitch up - R1 27776	
		Pitch down - R1 27775	
	3	8. S/C: ROLL, PITCH, & YAW sw - PULSE	
	1	GUID CONT sw - AGS	
	4	Key V77E	

CREW-MAN	PNL	PROCEDURES	REMARKS
		4.2.32 LANDING GEAR DEPLOY	
CDR	11	1. CB ED: LDG GEAR FLAG - close LOGIC PWR A - open	Permits verification of ED system B.
	8	2. ED: MASTER ARM sw - ON LDG GEAR DEPLOY sw - FIRE; tb - gray	
	11	3. CB ED: LOGIC PWR A - close	
	8	4. ED: LDG GEAR DEPLOY sw - FIRE; tb - gray MASTER ARM sw - OFF	Possible MASTER ALARM - on when ED: MASTER ARM sw - OFF, due to relay race removing CWEA inhibit.
		CAUTION CB ED: LOGIC PWR A & B must be closed at completion of this task.	
		5. Observe +Z landing gear through forward windows.	
		6. After separation from CSM, request CSM to confirm all landing gears deployed & locked.	
	11 8	7. CB ED: LDG GEAR FLAG - open ED: LDG GEAR DEPLOY tb - bp	

LM 2011, LM 3235

CREW-MAN	PNL	PROCEDURES	REMARKS
		4.1 PRELAUNCH CLOSEOUT CHECK (cont)	
	1	SHFT/TRUN ∡ sw - ±50°	
		RATE SCALE sw - 25°/SEC	
		ACA PROP sw - ENABLE	
		ENG THR CONT:	
		THR CONT sw- AUTO	
		MAN THROT sw - CDR	
		ENG ARM sw - OFF	Switch guard covering ASC position
		ATT/TRANSL sw - 4 JETS	
		BAL CPL sw - ON	
		ASC He REG 1 sw - center; tb - gray	ASC He REG latching valve - open
		ASC He REG 2 sw - center; tb - gray	ASC He REG latching valve - open
		DES He REG 1 sw - center; tb - gray	DES He REG latching valve - open
		DES He REG 2 sw - center; tb - bp	DES He REG latching valve - closed
		PRPLNT QTY MON sw - OFF	
		PRPLNT TEMP/PRESS MON sw - ASC	
		HELIUM MON sel - OFF	
		ABORT pb - reset	
		ABORT STAGE pb - reset	
		RNG/ALT MON sw - ALT/ALT RT	
		MODE SEL sw - LDG RADAR	
		GUID CONT sw - PGNS	
	3	8. ENG GMBL sw - ENABLE	
		DES ENG CMD OVRD sw - OFF	
		RADAR:	
		LDG ANT sw - AUTO	
		TEST sw - OFF	
		TEST/MON sel - ALT XMTR	
		RNDZ RADAR:	
		SLEW RATE sw - HI	
		SLEW sw - center	
		RNDZ RADAR sel - SLEW	
		S/C:	
		DEAD BAND sw - MIN	
		GYRO TEST ROLL sw - ROLL	
		GYRO TEST POS RT sw - OFF	
		ROLL sw - MODE CONT	
		PITCH sw - MODE CONT	
		YAW sw - MODE CONT	
		PGNS sw - OFF	Switch guard at side position
		AGS sw - OFF	
		IMU CAGE sw - OFF	

CREW-MAN	PNL	PROCEDURES	REMARKS
		4.1 PRELAUNCH CLOSEOUT CHECK (cont)	
		HTR CONT: TEMP MON sel - LDG RADAR RCS SYS A/B 2 QUAD 1, 4, 2, & 3 sw - OFF EVNT TMR: RESET/COUNT sw - UP TMR CONT sw - STOP SLEW CONT MIN sw - center SLEW CONT SEC sw - center LTG: SIDE PANELS sw - OFF FLOOD sw - OFF FLOOD cont - BRIGHT LAMP/TONE TEST sel - OFF EXTERIOR LTG sw - DOCK X POINTER SCALE sw - HI MULT	
	4	9. ACA/4 JET sw (CDR) - ENABLE TTCA/TRANSL sw (CDR) - ENABLE ACA/4 JET sw (LMP) - ENABLE TTCA/TRANSL sw (LMP) - ENABLE	
	AOT	10. Azimuth cont - CL AOT ind - 000.0° Eye guard assembly & density filter - removed MARK X pb - not depressed MARK Y pb - not depressed REJECT pb - not depressed RR GYRO SEL sw - PRIM	
		11. Verify rendezvous radar antenna restraint is not released.	
	2	12. RCS:	Status of fuel and oxidizer interconnect valves cannot be determined via ASC FUEL and ASC OXID tb's when tb's are unpowered. When powered, tb's - bp indicates that one set of fuel and oxidizer interconnect valves is closed while other set is open. When displays are not powered, talk-backs for main shutoff valves and crossfeed valve are not necessarily indicative of valve position. These valves should be in their nominal position; i.e., main shutoff valves open and crossfeed valve closed.
		SYS A ASC FEED 1 sw - center	ACS FEED 1 valves (primary) - open

LM2011

CREW-MAN	PNL	PROCEDURES	REMARKS
		4.1 PRELAUNCH CLOSEOUT CHECK (cont)	
		SYS A ASC FEED 2 sw - center	ASC FEED 2 valves (secondary) - closed
		SYS A ASC FUEL tb - bp	
		SYS A ASC OXID tb - bp	
		SYS B ASC FEED 1 sw - center	ASC FEED 1 valves (primary) - open
		SYS B ASC FEED 2 sw - center	ASC FEED 2 valves (secondary) - closed
		SYS B ASC FUEL tb - bp	
		SYS B ASC OXID tb - bp	
		SYS A QUAD 1, 4, 2, & 3 sw - ENABLE; tb - gray	
		SYS B QUAD 1, 4, 2, & 3 sw - ENABLE; tb - gray	
		CRSFD sw - center; tb - bp	CRSFD valves - closed
		SYS A MAIN SOV sw - center; tb - gray	SYS A MAIN SOV - open
		SYS B MAIN SOV sw - center; tb - gray	SYS B MAIN SOV - open
		TEMP/PRESS MON sel - He	
		ACA PROP sw - ENABLE	
		MASTER ALARM pb/lt - not depressed	
		RATE/ERR MON sw - LDG RDR/CMPTR	
		ATTITUDE MON sw - PGNS	
		GLYCOL sel - PUMP 2	
		SUIT FAN sel - 1	
		O2/H2O QTY MON sel - ASC 2	
	TTCA	13. THROTTLE/JETS cont (LMP) - JETS	
		Throttle friction cont (LMP) - as desired	
	6	14. Eng STOP pb/lt - reset	
		AGS STATUS sw - OFF	
	ACA	15. PTT pb (LMP) - not depressed	
	16	16. All cb's - open, except:	
		CB LTG: FLOOD - close	
		CB S/C: ASA - close	
		CB HTR:	
		MESA - close	
		S BD ANT - close	
		CB EPS:	
		DC BUS VOLT - close	
		DES ECA - close	
		CROSS TIE BAL LOADS - close	
		BAT FEED TIE (2) - close	
		Verify cb status per Prelaunch Closeout Check.	See figure 4-2.

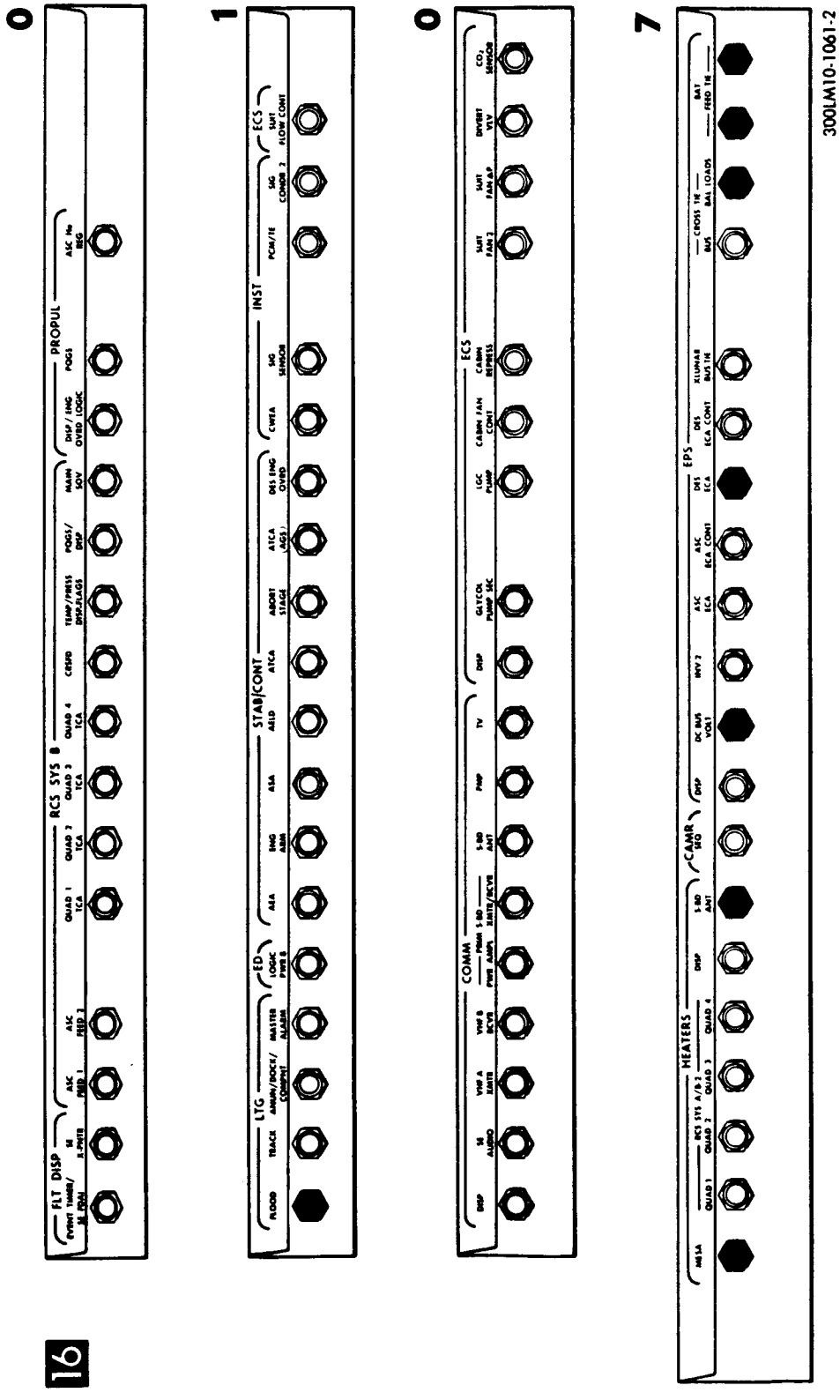

Figure 4-2. Prelaunch Closeout Check (Panel 16)

LM3250

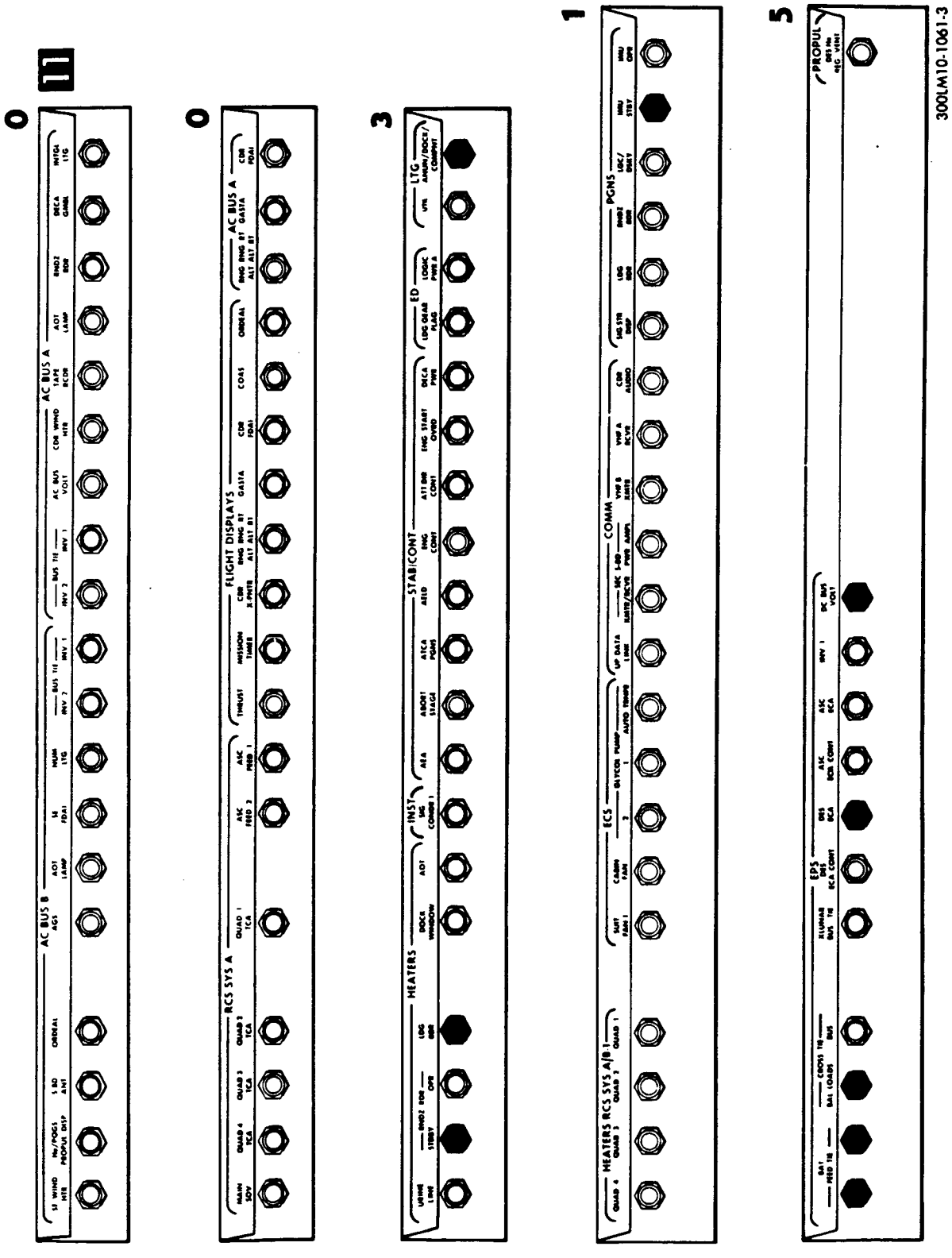

Figure 4-3. Initial Entry Status Check (Panel 11)

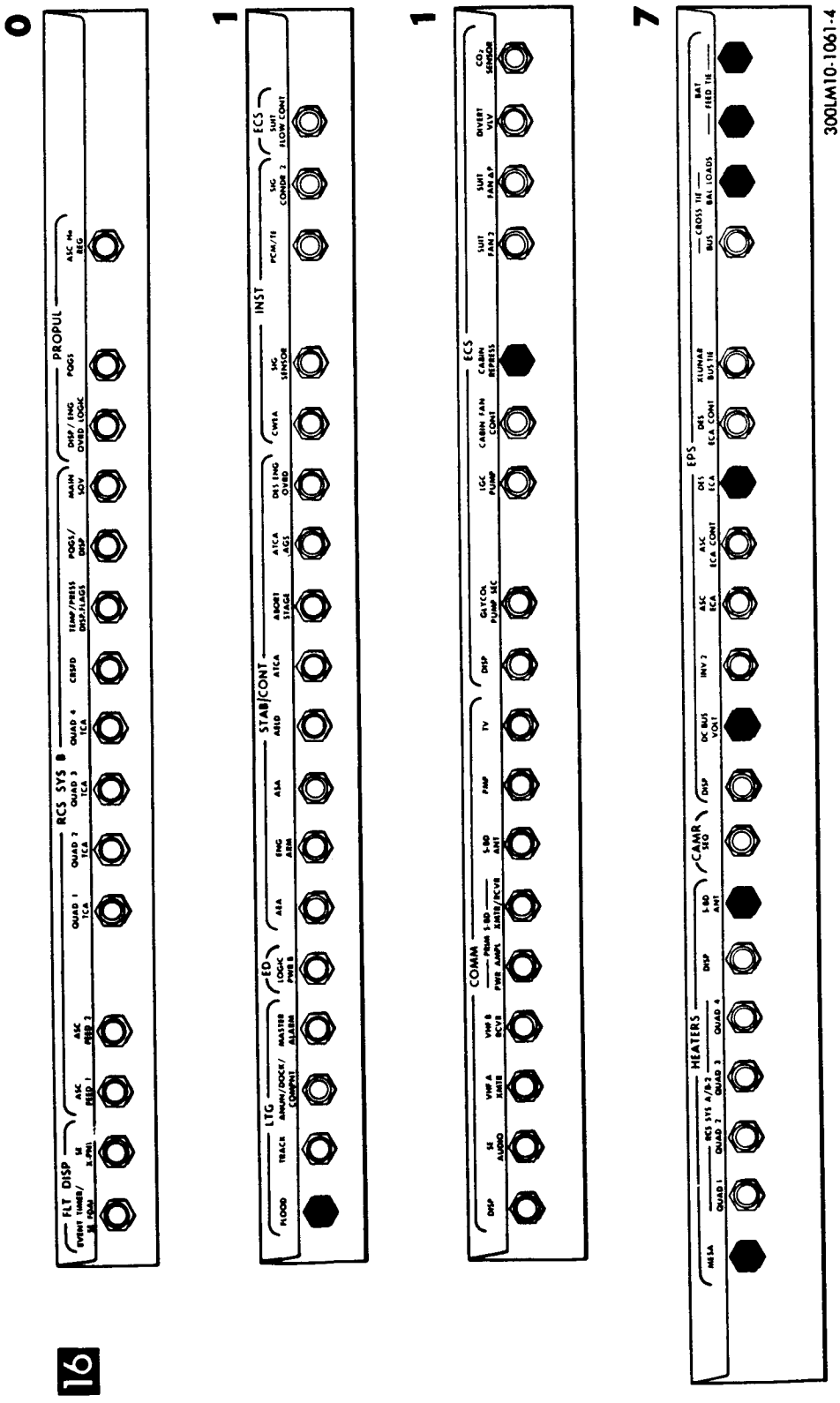

Figure 4-4. Initial Entry Status Check (Panel 16)

16

LM 3250

CREW-MAN	PNL	PROCEDURES	REMARKS
		4.2.1 INITIAL ENTRY STATUS CHECK (cont)	FDAI pwr tb (2) - OFF (in view) C/W PWR caut lt - on
	ECS	4. DES H20 vlv - OPEN	
		4.2.2 EPS ACTIVATION & CHECKOUT	
	5 16	1. LTG: ANUN/NUM cont - adjust CB EPS: DISP - close XLUNAR BUS TIE - close DES ECA CONT - close CB INST: SIG SENSOR - close PCM/TE - close SIG CONDR 2 - close	
	11	CB EPS: XLUNAR BUS TIE - close DES ECA CONT - close CB INST: SIG CONDR 1 - close	
	14	EPS: LMP BAT 1 tb - LO LMP BAT 2 tb - bp CDR BAT 3 tb - bp CDR BAT 4 tb - LO LUNAR BAT tb - bp DES BATS tb - gray BAT 5 NORMAL LMP FEED tb - bp BAT 5 BACK UP CDR FEED tb - bp BAT 6 NORMAL CDR FEED tb - bp BAT 6 BACK UP LMP FEED tb - bp	
		2. Check d-c bus voltage: EPS: POWER/TEMP MON sel - CDR BUS VOLTS ind - 25.0 to 32.5 vdc POWER/TEMP MON sel - LMP BUS VOLTS ind - 25.0 to 32.5 vdc	

CREW-MAN	PNL	PROCEDURES	REMARKS
		4.2.2 EPS ACTIVATION & CHECKOUT (cont)	
		3. Activate RCS heaters:	
	11	CB HTR RCS SYS A/B 1: QUAD 4, 3, 2, & 1 - close	
	16	CB HTR RCS SYS A/B 2: QUAD 1, 2, 3, & 4 - close	
	3	HTR CONT: RCS SYS A/B 2 QUAD 1, 4, 2, & 3 sw - AUTO	
	16	CB HTR: DISP - close	
	3	HTR CONT: TEMP MON sel - RCS QUAD 1, 2, 3, 4	
		Determine time for lowest temperature quad to reach 120°F.	Time for quad temperature to reach 120°F is given in following table.

Initial Temperature (°F)	Time for Quad to Reach 120°F (min)
20	70
30	60
40	50
50	40
60	30
70	20
80	15
90	10
100	5

(Times given are to insure that quad is properly warmed up if one heater system has failed off. Warmup time for no failures is about one-half of times given.)

CAUTION

RCS quad temperatures must be $\geq$ 120° F for 25 minutes before firing RCS thrusters.

LTG: EXTERIOR LTG sw - OFF

CAUTION

Do not proceed to step 4 if bus voltage >27 vdc. If bus voltage >27 vdc, continue EPS activation until bus voltage $\leq$27 vdc, then perform step 4.

CREW-MAN	PNL	PROCEDURES	REMARKS
		4.2.2 EPS ACTIVATION & CHECKOUT (cont)	
		4. Turn on high voltage:	
	11,16	CB EPS: CROSS TIE BUS - close	If monitoring voltage and current while performing this step, first battery will furnish reverse current into other battery that has not been switched to high-voltage tap. Reverse current will cease as soon as battery is removed from line.
	14	EPS:	
		LMP BAT 1 HI V sw - OFF/RESET; tb - bp, then ON; tb - gray	
		CDR BAT 4 HI V sw - OFF/RESET; tb - bp, then ON; tb - gray	
	11,16	CB EPS:	
		CROSS TIE BUS - open	
		CROSS TIE BAL LOADS - open	
	14	EPS:	
		POWER/TEMP MON sw - BAT 1	
		When AMPS ind - >15 amps:	
		LMP BAT 2 sw - OFF/RESET; tb - bp, then ON; tb - gray	
		POWER/TEMP MON sw - BAT 4	
		When AMPS ind - >15 amps:	
		CDR BAT 3 sw - OFF/RESET; tb - bp, then ON; tb - gray	
		5. Complete EPS activation:	
	11	CB/AC BUS B:	
		BUS TIE INV 2 - close	
		BUS TIE INV 1 - close	
		CB/AC BUS A:	
		BUS TIE INV 2 - close	
		BUS TIE INV 1 - close	
		AC BUS VOLT - close	
		CB EPS:	
		INV 1 - close	CB EPS: INV 1 is closed for checkout. Inverter draws power while this circuit breaker is closed.
	16	INV 2 - close	
		6. CB INST: CWEA - close	C/W PWR caut lt - off CWEA status indications are: CES AC warn lt - on CES DC warn lt - on LGC warn lt - on RCS A REG warn lt - on RCS B REG warn lt - on PRE AMPS caut lt - on ECS caut lt - on (assuming ECS has not been activated) GLYCOL caut lt - on (if ECS: GLYCOL temp ind >50°F)

CREW-MAN	PNL	PROCEDURES	REMARKS
		4.2.2 EPS ACTIVATION & CHECKOUT (cont)	
			Component caution status indications are: H2O SEP comp caut lt - on GLYCOL comp caut lt - on MASTER ALARM - off (because panel 16 CB LTG: MASTER ALARM is not closed) These indications should not be regarded as malfunction symptoms. As subsequent tasks are performed, the caution and warning lights go off.
	14	7. Initial EPS check: EPS: POWER/TEMP MON sel - AC BUS INVERTER sw - 1 VOLTS ind - green band INVERTER sw - 2 VOLTS ind - green band POWER/TEMP MON sel - LMP BUS VOLTS ind - 28.0 to 32.5 vdc POWER/TEMP MON sel - CDR BUS VOLTS ind - 28.0 to 32.5 vdc POWER/TEMP MON sel - BAT 4 VOLTS ind - 28.0 to 32.5 vdc AMPS ind - TBD Repeat for BAT 3, 2, 1. POWER/TEMP MON sel - ED/OFF ED VOLTS sw - BAT A VOLTS ind - 35.0 to 37.8 vdc ED VOLTS sw - BAT B VOLTS ind - 35.0 to 37.8 vdc	Green band represents 112 to 118 vac. To obtain proper current measurement when monitoring descent battery, divide indicator reading by 2. Nominal open-circuit voltage for each ED battery is 37.1 vdc.
	11	8. CB EPS: INV 1 - open	Opening CB EPS: INV 1 prevents unnecessary power consumption.
	14	9. EPS: POWER.TEMP MON sel - AC BUS	
	11	10. CB/AC BUS B: SE WIND HTR - close	Assumption: Window shades are in stowed position when checking heaters. Heaters can also be checked in helmets-and-gloves-off configuration by placing crewmen's bare hand on window.
	14 11	EPS: VOLTS ind - voltage drop CB/AC BUS B: SE WIND HTR - open	Voltage drop indicates LMP window heater turn-on.

CREW-MAN	PNL	PROCEDURES	REMARKS
		4.2.2 EPS ACTIVATION & CHECKOUT (cont)	
	14	11. CB/AC BUS A: CDR WIND HTR - close EPS: VOLTS ind - voltage drop	Voltage drop indicates CDR window heater turn-on.
	11	12. CB/AC BUS B: SE WIND HTR - close	
		13. CB HTR: DOCK WINDOW - close	Docking window heater turn-on cannot be detected by voltage on EPS: VOLTS ind.
		14. CB S/C: ASA - close	
		4.2.3 PRIMARY GLYCOL LOOP ACTIVATION	
	2	1. ECS: PRESS ind pwr fail lt - on GLYCOL ind pwr fail lt - on QUANTITY ind pwr fail lt - on GLYCOL comp caut lt - on	
	11	2. Verify: CB ECS: GLYCOL PUMP 1 - open GLYCOL PUMP 2 - open GLYCOL PUMP AUTO TRNFR - open	
	16	3. CB ECS: DISP - close	Following indicator power failure lights - off when CB ECS: DISP is closed: ECS: PRESS GLYCOL QUANTITY
	2	4. GLYCOL sel - PUMP 1 ECS: GLYCOL press ind - record: _____ GLYCOL sel - INST (SEC) ECS: GLYCOL press ind - record: _____	Discharge pressure of primary and secondary glycol loops is necessary to determine CWEA instrumentation failure or leak in loop.
		5. GLYCOL sel - PUMP 2	
	11	6. CB ECS: GLYCOL PUMP AUTO TRNFR - close GLYCOL PUMP 1 - close GLYCOL PUMP AUTO TRNFR - open	

CREW-MAN	PNL	PROCEDURES	REMARKS
		4.2.3 PRIMARY GLYCOL LOOP ACTIVATION (cont)	
	2	7. GLYCOL sel - PUMP 1	
	11	8. CB ECS: GLYCOL PUMP 2 - close	Primary glycol loop circulation starts, but primary sublimator has not been activated.
	2	9. ECS: GLYCOL press ind - 21 to 37 psia GLYCOL comp caut lt - off	
		4.2.4 CIRCUIT BREAKER ACTIVATION	
	1	1. X pointer ind pwr fail lt - on THRUST ind pwr fail lt - on MPS: PRESS ind pwr fail lt - on	Indicator power failure lights - off as circuit breaker for associated indicator power is closed.
	2	RCS: PRESS ind pwr fail lt - on QUANTITY ind pwr fail lt - on X pointer ind pwr fail lt - on	
	1, 2	FDAI pwr tb (2) - OFF (in view)	

Pwr Fail Lt	Circuit Breaker
X pointer ind	CB FLT DISP: CDR X PNTR
THRUST ind	CB FLT DISP: THRUST
MPS: PRESS ind	CB PROPUL: DISP/ENG OVRD LOGIC
RCS: PRESS ind	CB RCS SYS B: TEMP/PRESS DISP FLAGS
RCS: QUANTITY ind	CB RCS SYS B: PQGS/DISP
X pointer ind	CB FLT DISP: SE X PNTR
FDAI pwr tb (2) - OFF (in view)	CB FLT DISP: CDR FDAI CB FLT DISP: SE EVNT TMR/SE FDAI

CREW-MAN	PNL	PROCEDURES	REMARKS
		4.2.4 CIRCUIT BREAKER ACTIVATION (cont)	
		2. Enable ATCA:	
		CAUTION	
		Before closing CB S/C: ATCA, ensure:	Verification of these controls and closing of CB S/C: ATCA before closing related circuit breakers ensures against inadvertent RCS jet firing or possible driving of DPS engine gimbal.
	1	GUID CONT sw - PGNS	
	3	S/C: PGNS & AGS sw - OFF	
	11	CB S/C: ENG CONT - open	
		CB A/C BUS A: DECA GMBL - open	
	16	CB S/C:	
		ENG ARM - open	
		ATCA - close	
	11	3. All cb's - close, except:	
		CB/AC BUS B:	
		SE WIND HTR - as required	When crew is monitoring windows and can detect fogging, heater operation is at crew discretion. (Use if condensation is noticed.)
		AOT LAMP - open	
		CB/AC BUS A:	
		CDR WIND HTR - as required	
		AOT LAMP - open	
		RNDZ RDR - open	
		CB RCS SYS A: QUAD 4, 3, 2, & 1 TCA - open	
		CAUTION	
		CB/AC BUS A: RNG/RNG RT must be closed before CB FLT DISP: RNG/RNG RT	
		CB FLT DISP: RNG/RNG RT - open	
		CB HTR:	
		URINE LINE - as required	
		RNDZ RDR STBY - open (required)	
		DOCK WINDOW - as required	
		CB S/C:	
		AEA - open	
		AELD - open	
		CB ECS:	
		SUIT FAN 1 - open	
		CABIN FAN - open	
		CB COMM: CDR AUDIO - open	

CREW-MAN	PNL	PROCEDURES	REMARKS
		4.2.4 CIRCUIT BREAKER ACTIVATION (cont)	
		CB PGNS: LDG RDR - open RNDZ RDR - open	
	1	RNG/ALT ind pwr/sig fail lt - on	RNG/ALT ind pwr/sig fail lt - on when CB/AC BUS A: RNG/RNG RT - close. RNG/ALT ind pwr/sig fail lt remains on due to lack of good range/altitude and rate signals when CB FLT DISP: RNG/RNG RT - close. Light goes off after good range/altitude and rate signals are present from selected input source.
		LGC warn lt - on (up to 20 sec)	LGC warn lt - on due to LGC startup transient conditions. Light remains on until capacitor discharges. LGC warn lt was on previously because CB PGNS: LGC/DSKY was open.
	11	CB PGNS: IMU OPR - open	
		CB EPS: CROSS TIE BUS - open ASC ECA CONT - open INV 1 - open	
	1, 2	FDAI pwr tb (2) - OFF (in view)	
	11	4. CB FLT DISP: RNG/RNG RT - close	Closing CB FLT DISP: RNG/RNG RT after CB/AC BUS A: RNG/RNG RT applies drive power to tapemeter after logic power. This prevents erratic driving, and possible off-scale condition, of tapemeter during power-up.
		Verify cb status per Circuit Breaker Activation	See figure 4-5.
	8	5. DES PROPUL: FUEL VENT tb - gray OXID VENT tb - gray ED: LDG GEAR DEPLOY tb - bp	FUEL VENT latching valve is open when tb - gray. OXID VENT latching valve is open when tb - gray.
	1	6. THRUST ind pwr fail lt - off X pointer ind pwr fail lt - off FDAI pwr tb - on (out of view)	

LM 201c

CREW-MAN	PNL	PROCEDURES	REMARKS
	16	7. All cb's - close, except: CB RCS SYS B: QUAD 1, 2, 3, & 4 TCA - open CB LTG: MASTER ALARM - open CB S/C: AEA - open ENG ARM - open AELD - open CB COMM: SE AUDIO - open S BD ANT - open TV - open	ECS caut lt and SUIT FAN comp caut lt - on when CB ECS: SUIT FAN ΔP - close.

PARA	TITLE	PAGE
4.3	Subsystem Deactivation	4.3-2
4.3.1	Preparation For Sublimator Dryout	4.3-2
4.3.2	Sublimator Dryout	4.3-10
4.3.3	Final Subsystem Deactivation	4.3-12
4.3.4	LM Transfer to CSM Power	4.3-21
4.3.4.1	LM Transfer to CSM Power (Unstaged)	4.3-21
4.3.4.2	LM Transfer to CSM Power (Staged)	4.3-22
4.3.5	LM Transfer to LM LV Power (Backup)	4.3-24
4.3.6	CSM Transfer to LM Power	4.3-25
4.3.6.1	LM Initial Power-Up (CSM Powered Down)	4.3-25
4.3.6.2	CSM Transfer to LM Power (Staged)	4.3-26
4.3.6.3	CSM Transfer to LM Power (Unstaged)	4.3-27
4.3.6.4	CSM Transfer to LM Power (Staged) - Lifeboat	4.3-28
4.3.7	LM-to-CSM Power Transfer (Unstaged) (Power Removal from CSM/LM Umbilical)	4.3-28

CREW-MAN	PNL	PROCEDURES	REMARKS
		4.3 SUBSYSTEM DEACTIVATION	
		Subsystem deactivation consists of tasks performed by the crew to place LM subsystems into a powered-down condition that reproduces, to the extent practicable, LM prelaunch closeout status.	
			Assumptions: (1) One crewman is in LM, (2) PGA is donned, (3) crewman is receiving oxygen through CSM transfer umbilical, and (4) cabin repressurization system is enabled. Ref para 4.14.5.
		4.3.1 PREPARATION FOR SUBLIMATOR DRYOUT	
		1. Perform LGC Power-Down Program (P06).	Ref para 4.6.1.2. Program 06 transfers ISS/LGC from operate to standby.
		2. ORDEAL: FDAI 1&2 sw - INRTL EARTH/LUNAR sw - PWR OFF LTG sw - OFF MODE sw - HOLD/FAST SLEW sw - center ALT SET cont - TBD nm	
	8	3. DES PROPUL: FUEL VENT sw - center; tb - gray OXID VENT sw - center; tb - gray ED: DES PRPLNT ISOL VLV sw - SAFE MASTER ARM sw - OFF DES VENT sw - SAFE ASC He SEL sw - BOTH LDG GEAR DEPLOY sw - SAFE; tb - bp RCS He PRESS sw - SAFE DES START He PRESS sw - SAFE ASC He PRESS sw - SAFE STAGE sw - SAFE STAGE RELAY sw - OFF AUDIO: S BAND T/R sw - OFF ICS T/R sw - OFF RELAY ON sw - RELAY OFF MODE sw - ICS/PTT AUDIO CONT sw - NORM VHF A sw - OFF VHF B sw - OFF	FUEL VENT latching valve is open when tb - gray. OXID VENT latching valve is open when tb - gray.

CREW-MAN	PNL	PROCEDURES	REMARKS
		4.3.1 PREPARATION FOR SUBLIMATOR DRYOUT (cont)	
	TTCA	4. THROTTLE/JETS cont (CDR) - JETS Throttle friction cont (CDR) - TBD	
	5	5. DES RATE sw - center Eng STOP pb/lt - reset Eng START pb/lt - not depressed +X TRANSL pb - not depressed MSN TMR: TMR CONT sw - STOP SLEW CONT HOURS sw - center SLEW CONT MIN sw - center SLEW CONT SEC sw - center LTG: OVERRIDE ANUN sw - OFF OVERRIDE NUM sw - OFF OVERRIDE INTEGRAL sw - OFF SIDE PANELS sw - OFF FLOOD cont - BRIGHT ANUN/NUM cont - DIM INTEGRAL cont - DIM	
	ACA	6. PTT pb (CDR) - not depressed	
	1	7. X POINTER SCALE sw - HI MULT MASTER ALARM pb/lt - not depressed RATE/ERR MON sw - LDG RDR/CMPTR ATTITUDE MON sw - PGNS SHFT/TRUN ° sw - ±50° RATE/SCALE sw - 25°/SEC ACA PROP sw - DISABLE ENG THR CONT: THR CONT sw - AUTO MAN THROT sw - CDR ENG ARM sw - OFF ATT/TRANSL sw - 2 JETS BAL CPL sw - ON	
		ASC He REG 1 sw - center; tb - gray	ASC He REG latching valve is open when tb - gray.
		ASC He REG 2 sw - center; tb - gray	ASC He REG latching valve is open when tb - gray.
		DES He REG 1 sw - center; tb - gray	DES He REG latching valve is open when tb - gray.
		DES He REG 2 sw - center; tb - bp	DES He REG latching valve is closed when tb - bp.
		PRPLNT QTY MON sw - OFF	

SUBSYS DEACT

CREW-MAN	PNL	PROCEDURES	REMARKS
		4.3.1 PREPARATION FOR SUBLIMATOR DRYOUT (cont)	
		PRPLNT TEMP/PRESS MON sw - ASC HELIUM MON sel - OFF ABORT pb - reset ABORT STAGE pb - reset RNG/ALT MON sw - ALT/ALT RT MODE SEL sw - LDG RDR GUID CONT sw - PGNS	
	3	8. ENG GMBL sw - ENABLE DES ENG CMD OVRD sw - OFF RADAR: LDG ANT sw - AUTO TEST sw - OFF TEST MON sel - ALT XMTR RNDZ RADAR: SLEW RATE sw - HI SLEW sw - center RNDZ RADAR sel - AUTO TRACK S/C: DEAD BAND sw - MIN GYRO TEST ROLL sw - ROLL GYRO TEST POS RT sw - OFF ROLL sw - MODE CONT PITCH sw - MODE CONT YAW sw - MODE CONT PGNS sw - OFF AGS sw - OFF IMU CAGE sw - OFF HTR CONT: TEMP MON sel - LDG RADAR EVNT TMR: RESET/COUNT sw - DOWN TMR CONT sw - STOP SLEW CONT MIN sw - center SLEW CONT SEC sw - center HTR CONT: RCS SYS A/B 2 QUAD 1, 2, 3, & 4 sw - OFF LTG: SIDE PANELS sw - OFF FLOOD sw - OFF FLOOD cont - BRIGHT EXTERIOR LTG sel - OFF LAMP/TONE TEST sel - OFF (ccw) X POINTER SCALE sw - HI MULT	

CREW-MAN	PNL	PROCEDURES	REMARKS
		4.3.1 PREPARATION FOR SUBLIMATOR DRYOUT (cont)	
	4	9. ACA/4 JET sw (CDR) - DISABLE TTCA/TRANSL sw (CDR) - DISABLE ACA/4 JET sw (LMP) - DISABLE TTCA/TRANSL sw (LMP) - DISABLE	
	AOT	10. Azimuth cont - CL Eye guard assembly and density filter - removed MARK X pb - not depressed MARK Y pb - not depressed REJECT pb - not depressed	
	2	11. RCS: SYS A ASC FEED 1 & 2 sw - center SYS A ASC FUEL & OXID tb - bp SYS B ASC FEED 1 & 2 sw - center SYS B ASC FUEL & OXID tb - bp SYS A QUAD 1, 4, 2, & 3 sw - center; tb - gray SYS B QUAD 1, 4, 2, & 3 sw - center; tb - gray CRSFD sw - center; tb - bp SYS A MAIN SOV sw - center; tb - gray SYS B MAIN SOV sw - center; tb - gray TEMP/PRESS MON sel - He ACA PROP sw - DISABLE MASTER ALARM pb/lt - not depressed RATE/ERR MON sw - LDG RDR/CMPTR ATTITUDE MON sw - AGS O2/H2O QTY MON sel - DES 2	
	TTCA	12. THROTTLE/JETS cont (LMP) - JETS Throttle friction cont (LMP) - TBD	
	6	13. Eng STOP pb/lt - reset AGS STATUS sw - OFF	
	ACA	14. PTT pb (LMP) - not depressed	
	14	15. COMM: UPLINK SQUELCH sw - ENABLE	
	12	16. UP DATA LINK sw - OFF AUDIO: AUDIO CONT sw - NORM S BAND T/R sw - OFF	

SUBS DEAC

CREW-MAN	PNL	PROCEDURES	REMARKS
		4.3.1 PREPARATION FOR SUBLIMATOR DRYOUT (cont)	
		ICS T/R sw - OFF RELAY ON sw - RELAY OFF MODE sw - ICS/PTT VHF A sw - OFF VHF B sw - OFF COMM: S BAND MODULATE sw - PM S BAND XMTR/RCVR sw - PRIM S BAND PWR AMPL sw - PRIM S BAND VOICE sw - OFF S BAND PCM sw - PCM S BAND RANGE sw - OFF/RESET VHF A XMTR sw - OFF VHF A RCVR sw - OFF VHF B XMTR sw - OFF VHF B RCVR sw - OFF TLM BIOMED sw - OFF TLM PCM sw - HI RECORDER sw - OFF RECORDER TAPE tb - bp	High-bit-rate telemetry is required to monitor glycol temperature in real time.
		COMM ANT: VHF sel - as required TRACK MODE sw - AUTO PITCH cont - as required YAW cont - as required S BAND sel - SLEW	If Sublimator Dryout Procedure is performed on lunar surface, using erectable antenna: TRACK MODE sw - OFF and S BAND sel - LUNAR STAY. If Sublimator Dryout procedure is performed on lunar surface using steerable antenna: TRACK MODE sw - SLEW and S BAND sel - SLEW.
	ECS	17. SUIT TEMP vlv - COLD	
		18. LIQUID GARMENT COOLING vlv - COLD	
	16	19. CB LTG: MASTER ALARM - open	CB LTG: MASTER ALARM - open out of sequence to prevent erroneous failure signals from activating master alarm.
	11	20. CB/AC BUS B: He/PQGS PROPUL DISP - open S BD ANT - close ORDEAL - open AGS - open AOT LAMP - open SE FDAI - open	

CREW-MAN	PNL	PROCEDURES	REMARKS
		4.3.1 PREPARATION FOR SUBLIMATOR DRYOUT (cont)	
		CB/AC BUS A:	
		TAPE RCDR - open	
		AOT LAMP - open	
		RNDZ RDR - open	
		DECA GMBL - open	
		CB RCS SYS A:	
		MAIN SOV - open	
		ASC FEED 2 - open	
		ASC FEED 1 - open	
	11	CB FLT DISP: THRUST - open	
	1	THRUST ind pwr fail lt - on	
	11	CB FLT DISP: CDR X PNTR - open	
	1	X pointer ind pwr fail lt - on	
	11	CB FLT DISP: RNG/RNG RT - open	Opening CB FLT DISP: RNG/RNG RT before opening CB/AC BUS A: RNG/RNG RT removes drive power from tapemeter before logic power. This prevents erratic driving, and possible off-scale condition, of tapemeter during power-down.
	1	RNG/ALT ind pwr/sig fail lt - on	
	11	CB FLT DISP:	
		CDR FDAI - open	
		COAS - open	
		ORDEAL - open	
		CB AC BUS A:	
		RNG/RNG RT - open	
		CDR FDAI - open	
		CB HTR:	
		URINE LINE - open	
		RNDZ RDR STDBY - close	
		RNDZ RDR OPR - open	
		DOCK WINDOW - open	
		AOT - open	
		CB S/C:	
		ABORT STAGE - open	
		ATCA (PGNS) - open	
	2	PRE AMPS caut lt - on	
	11	CB S/C:	
		AELD - open	
		ATT DIR CONT - open	
		ENG START OVRD - open	
		CB ED:	
		LDG GEAR FLAG - open	
		LOGIC PWR A - open	
		CB HTR RCS SYS A/B 1: QUAD 4, 3, 2, & 1 - open	

SUBSYS DEACT

CREW-MAN	PNL	PROCEDURES	REMARKS
		4.3.1 PREPARATION FOR SUBLIMATOR DRYOUT (cont)	
		CB ECS:	
		SUIT FAN 1 - open	
		CABIN FAN - open	
	2	ECS caut lt - on	
		SUIT FAN comp caut lt - on	
		H20 SEP comp caut lt - on (delayed)	Light on when water separator speed ≤800 rpm.
	11	CB COMM:	
		UP DATA LINK - open	
		VHF B XMTR - open	
		VHF A RCVR - open	
		CB PGNS:	
		SIG STR DISP - open	
		LDG RDR - open	
		RNDZ RDR - open	
		LGC/DSKY - open	LGC warn lt discrete is normally closed contact; therefore, light is on whenever CWEA is powered up and LGC is not powered up.
		IMU OPR - open	
		CB EPS:	
		ASC ECA CONT - open	
		ASC ECA - open	
		INV 1 - open	
		CB PROPUL: DES He REG/VENT - open	
		Verify cb status per Preparation for Sublimator Dryout	See figure 4-12.
	16	21. CB FLT DISP:	
		EVNT TMR/SE FDAI - open	
		SE X PNTR - open	
	2	X pointer ind pwr fail lt - on	
		FDAI pwr tb - OFF (in view)	
	16	CB RCS SYS B:	
		ASC FEED 1 - open	
		ASC FEED 2 - open	
		CRSFD - open	
		TEMP/PRESS DISP FLAGS - open	
	2	RCS: PRESS ind pwr fail lt - on	
	16	CB RCS SYS B: PQGS/DISP - open	
	2	RCS: QUANTITY ind pwr fail lt - on	
	16	CB RCS SYS B: MAIN SOV - open	
		CB PROPUL: DISP/ENG OVRD LOGIC - open	
	1	MPS: PRESS ind pwr fail lt - on	
	16	CB PROPUL:	
		PQGS - open	
		ASC He REG - open	

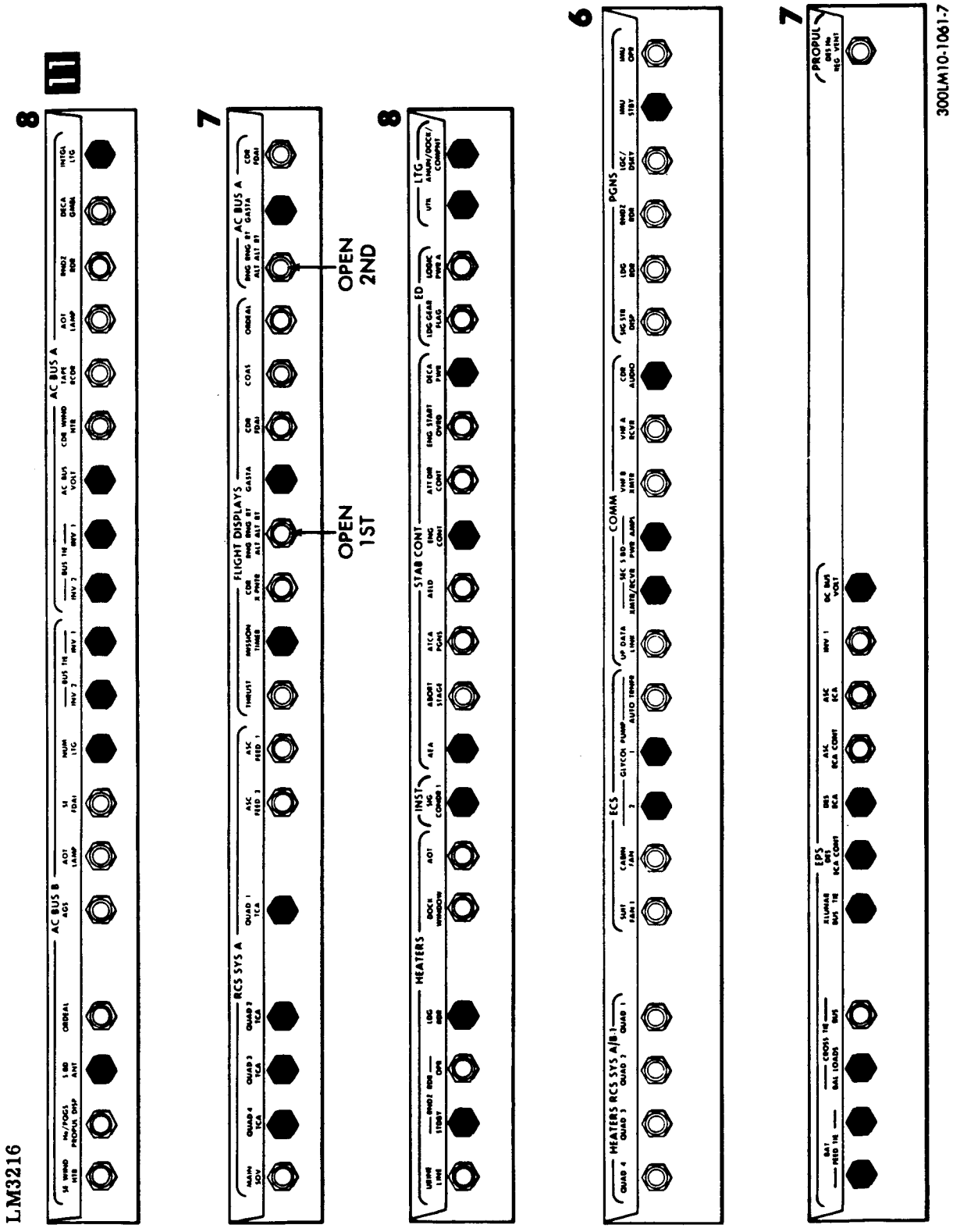
LM3216
11
8
AC BUS B
AC BUS A
7
RCS SYS A
FLIGHT DISPLAYS
OPEN 2ND
OPEN 1ST
8
HEATERS
INST
STAB CONT
6
HEATERS RCS SYS A/B
ECS
COMM
PGNS
7
EPS
PROPUL
300LM10-1061-7

CREW-MAN	PNL	PROCEDURES	REMARKS
		4.3.1 PREPARATION FOR SUBLIMATOR DRYOUT (cont)	
		CB LTG: TRACK - open	
		CB ED: LOGIC PWR B - open	
		CB S/C:	
		AEA - open	
		ENG ARM - open	
		AELD - open	
		ABORT STAGE - open	
		ATCA (AGS) - open	
		DES ENG OVRD - open	
		CB ECS: SUIT FLOW CONT - open	
		CB COMM:	
		VHF A XMTR - open	
		VHF B RCVR - open	
		S BD ANT - open	
		TV - open	
		CB ECS:	
		GLYCOL PUMP SEC - open	
		CABIN FAN CONT - open	
		SUIT FAN 2 - open	
		SUIT FAN ΔP - open	
	2	SUIT FAN comp caut lt - OFF	
	16	CB ECS:	
		DIVERT VLV - open	
		CO2 SENSOR - open	
		CB HTR RCS SYS A/B 2: QUAD 1, 2, 3, & 4 - open	
		CB CAMR: SEQ - open	
		CB EPS:	
		ASC ECA - open	
		ASC ECA CONT - open	
		Verify cb status per Preparation for Sublimator Dryout.	See figure 4-13.
		4.3.2 SUBLIMATOR DRYOUT	
	ECS	1. PRI EVAP FLOW #1 vlv - CLOSE	
		2. ECS: GLYCOL temp ind - monitor	GLYCOL caut lt - on when ECS: GLYCOL temp ind $\geq$50°F.

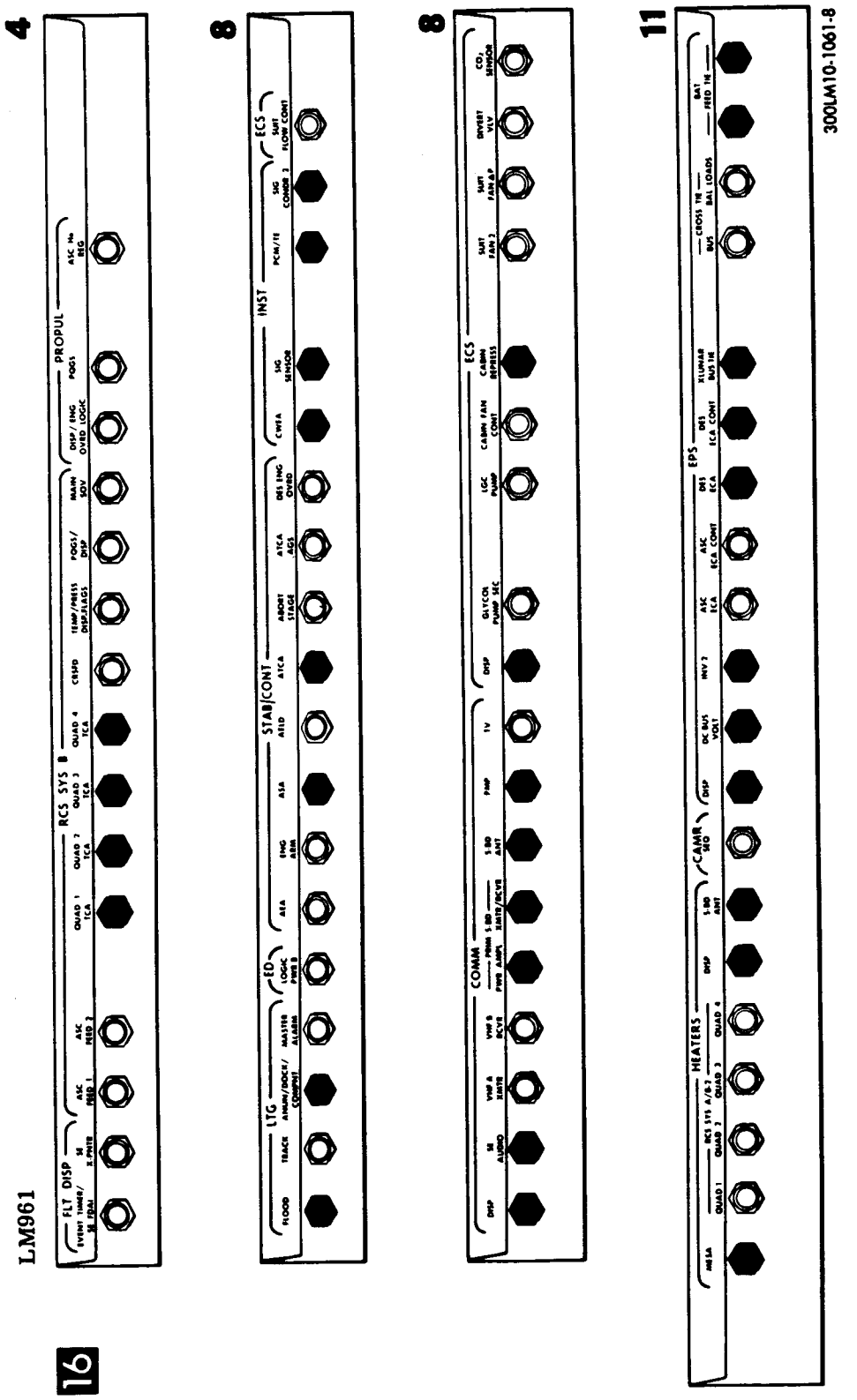

Figure 4-13. Preparation For Sublimator Dryout (Panel 16)

CREW-MAN	PNL	PROCEDURES	REMARKS
		4.3.3 FINAL SUBSYSTEM DEACTIVATION NOTE See figure 4-14 for time since PRI EVAP FLOW #1 vlv - CLOSE (para 4.3.2, step 1) before proceeding.	
	16 2	1. CB INST: CWEA - open C/W PWR caut lt - on	CB INST: CWEA - open out of sequence to prevent erroneous failure signals from activating CWEA and overloading LCA as subsequent circuit breakers are opened.
	11	2. CB/AC BUS B: SE WIND HTR - open BUS TIE INV 1 - open CB/AC BUS A: BUS TIE INV 1 - open AC BUS VOLT - open CDR WIND HTR - open CB RCS SYS A: QUAD 4 TCA - open QUAD 3 TCA - open QUAD 2 TCA - open QUAD 1 TCA - open CB FLT DISP MSN TMR - open GASTA - open CB/AC BUS A: GASTA - open CB INST: SIG CONDR 1 - open CB S/C: DECA PWR - open CB LTG: UTIL - open ANUN/DOCK/COMPNT - open CB ECS: CABIN FAN - open CB COMM: SEC S BD XMTR/RCVR - open SEC S BD PWR AMPL - open CDR AUDIO - open CB EPS: CROSS TIE BUS - open X LUNAR BUS TIE - open DC BUS VOLT - open Verify cb status per Final Subsystem Deactivation	See figure 4-15 (Sheet 1 of 4).

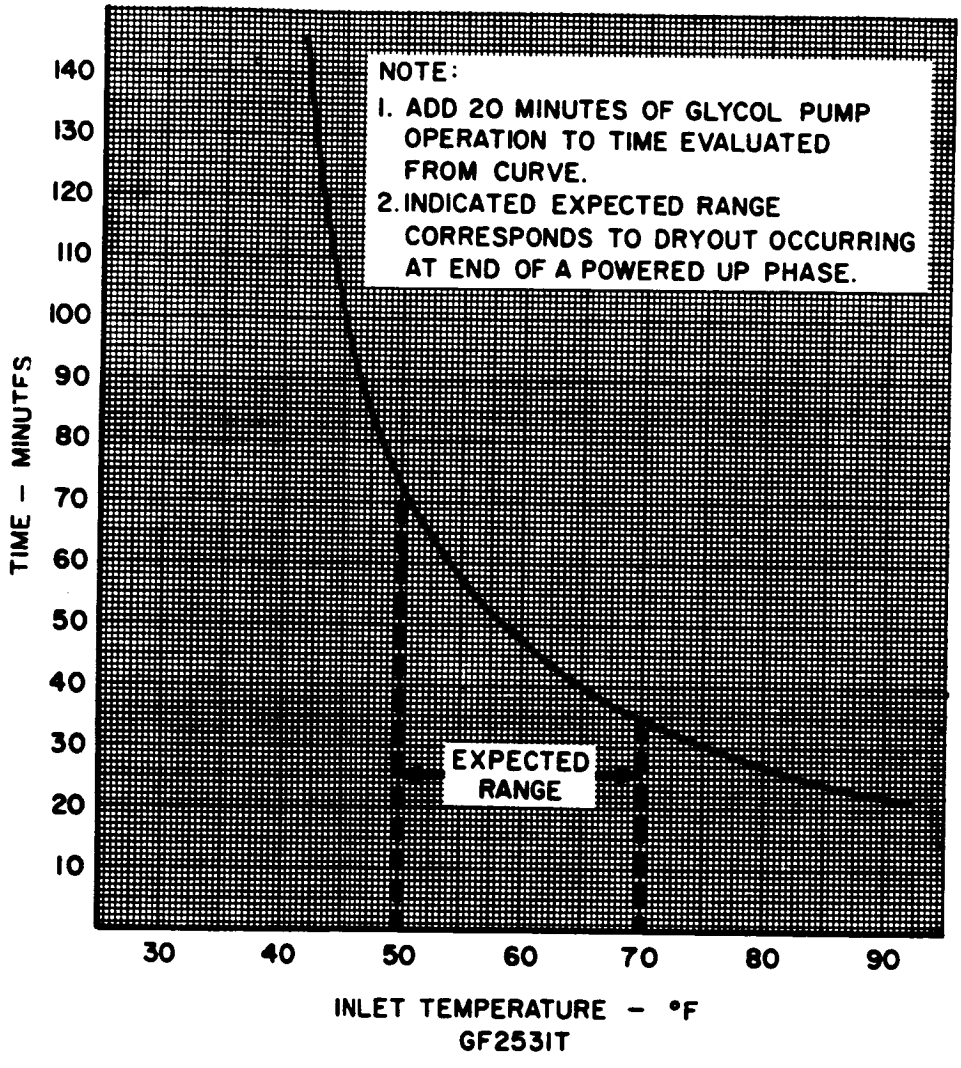

300LM5-1050

Figure 4-14. Sublimator Dryout Time Required vs Initial Inlet Temperature

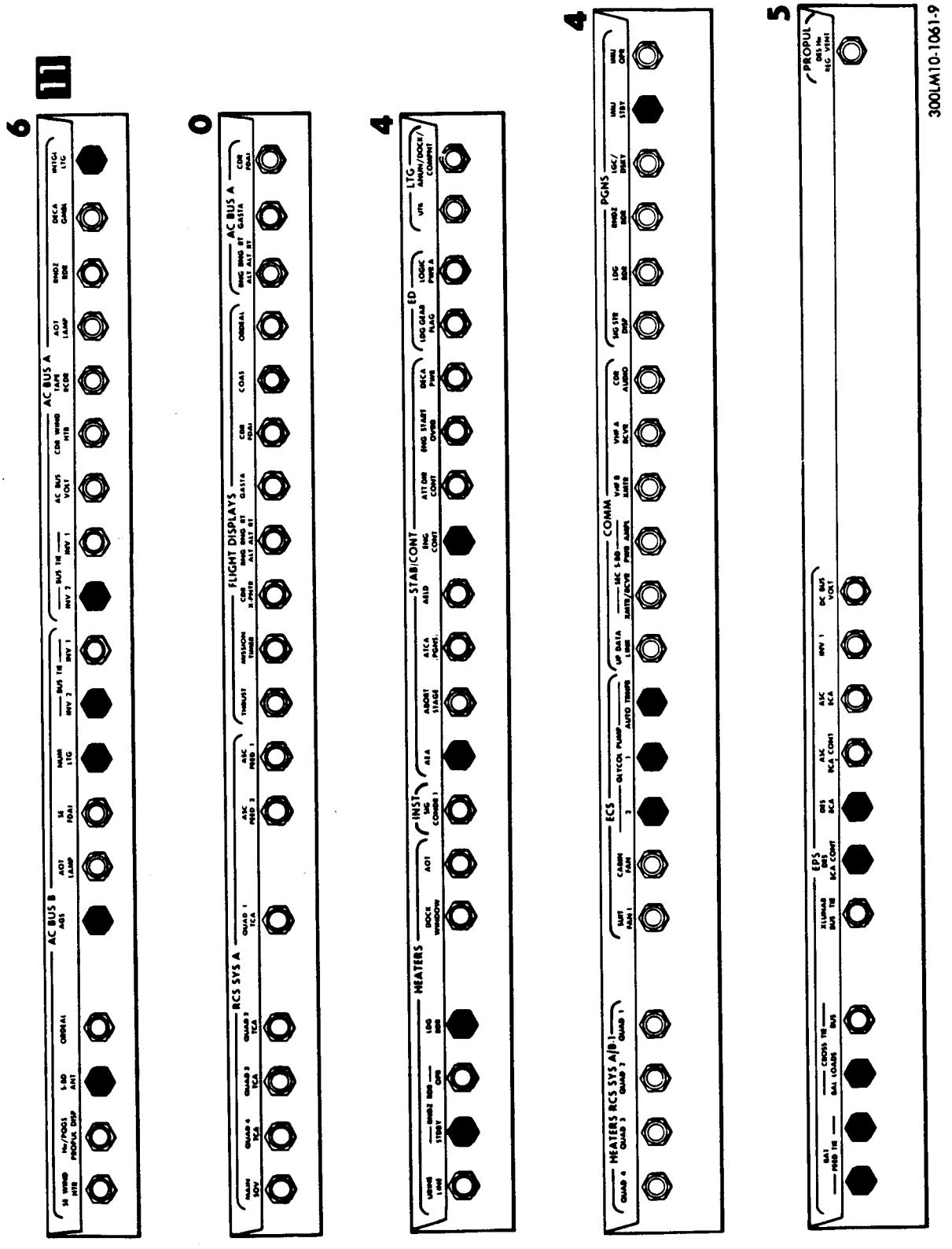

Figure 4-15. Final Subsystem Deactivation, Panel 11 (Sheet 1 of 4)

CREW-MAN	PNL	PROCEDURES	REMARKS
		4.3.3 FINAL SUBSYSTEM DEACTIVATION (cont)	
	16	3. CB RCS SYS B: QUAD 1 TCA - open QUAD 2 TCA - open QUAD 3 TCA - open QUAD 4 TCA - open CB LTG: ANUN/DOCK/COMPNT - open CB S/C: ATCA - open ATCA (AGS) - open CB INST: SIG SENSOR - open PCM/TE - open CB COMM: DISP - open SE AUDIO - open PRIM S BD PWR AMPL - open PRIM S BD XMTR/RCVR - open PMP - open CB ECS: DISP - open CB EPS: DC BUS VOLT - open X LUNAR BUS TIE - open CROSS TIE BUS - open Verify cb status per Final Subsystem Deactivation.	C/W PWR caut lt, all component caution lights, and all indicator power failure lights go off. See figure 4-15 (Sheet 2 of 4).
	ECS	4. ECS closeout: Overhead floodlight (LMP) - rotate aft SUIT GAS DIVERTER vlv - PULL EGRESS LO PLSS FILL vlv - CLOSE PRESS REG A vlv - CLOSE PRESS REG B vlv - CLOSE #1 ASC O2 vlv - CLOSE #2 ASC O2 vlv - CLOSE SUIT ISOL vlv (LMP) - SUIT DISC SUIT ISOL vlv (CDR) - SUIT DISC ASC H2O vlv - CLOSE SEC EVAP FLOW vlv - CLOSE DES H2O vlv - CLOSE PRI EVAP FLOW #1 vlv - CLOSE WATER TANK SELECT vlv - DES LIQUID GARMENT COOLING vlv - COLD CABIN GAS RETURN vlv - AUTO	When PRESS REG A and/or B vlv - CLOSE, ensure handle is rotated to full hard stop position.

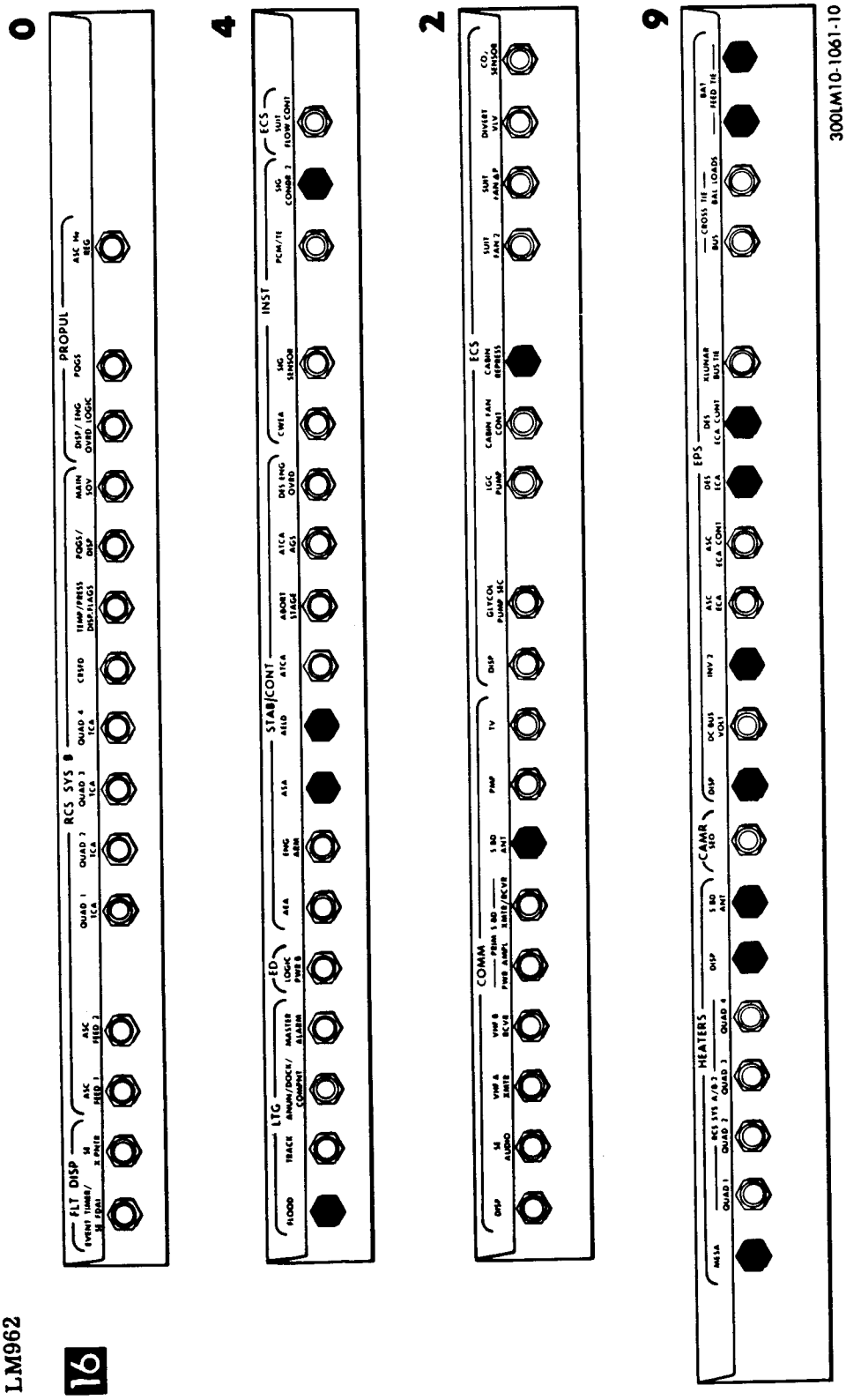

LM962

16

Figure 4-15. Final Subsystem Deactivation, Panel 16 (Sheet 2 of 4)

CREW-MAN	PNL	PROCEDURES	REMARKS
		4.3.3 FINAL SUBSYSTEM DEACTIVATION (cont)	
		CO2 CANISTER SEL vlv - PRIM	
		SUIT CIRCUIT RELIEF vlv - AUTO	
		PRIM CO2 CANISTER cover - CLOSE	
		SEC CO2 CANISTER cover - CLOSE	
		WATER SEP SEL vlv - PULL SEP 2	
		Overhead floodlight (LMP) - rotate forward	
	2	SUIT FAN sel - 1	
		GLYCOL sel - PUMP 2	
		O2/H2O QTY MON sel - ASC 2	
	ECS	Cabin relief & dump vlv (fwd) - AUTO	
	+Z27	HI PLSS O2 FILL vlv - CLOSE	
		5. EPS closeout:	
	14	EPS:	
		ED VOLTS sw - OFF	
		POWER/TEMP MON sel - ED/OFF	
	16	All cb's - open, except:	
		CB LTG: FLOOD - close	
		CB S/C: ASA - close	
		CB INST: SIG CONDR 2 - close	
		CB ECS: CABIN REPRESS - close	
		CB HTR: S BD ANT - close	
		CB EPS:	
		DISP - close	
		INV 2 - close	
		DES ECA - close	
		DES ECA CONT - close	
		CROSS TIE BUS - close	
		CROSS TIE BAL LOADS - close	
		BAT FEED TIE (2) - close	
		NOTE See figure 4-14 for time since PRI EVAP FLOW #1 vlv - CLOSE (para 4.3.2, step 1) before proceeding.	
	11	CB ECS:	
		GLYCOL PUMP AUTO TRNFR - open	To avoid setting automatic transfer circuit, CB ECS: GLYCOL PUMP AUTO TRNFR - open before CB ECS: GLYCOL PUMP 1 - open.
		GLYCOL PUMP 1 - open	
		GLYCOL PUMP 2 - open	

CREW-MAN	PNL	PROCEDURES	REMARKS
		4.3.3 FINAL SUBSYSTEM DEACTIVATION (cont)	
	11	All cb's - open, except: CB/AC BUS B: NUM LTG - close BUS TIE INV 2 - close CB/AC BUS A: BUS TIE INV 2 - close INTGL LTG - close CB HTR: RNDZ RDR STBY - close LDG RDR - close CB PGNS: IMU STBY - close CB EPS: BAT FEED TIE (2) - close CROSS TIE BAL LOADS - close CROSS TIE BUS - close DES ECA CONT - close DES ECA - close	
	14	EPS: LMP BAT 2 sw - OFF/RESET; tb - bp CDR BAT 3 sw - OFF/RESET; tb - bp CDR BAT 4 LO V sw - OFF/RESET; tb - bp, then ON; tb - LO LMP BAT 1 LO V sw - OFF/RESET; tb - bp, then ON; tb - LO	Switching all descent stage batteries from high to low voltage must be completed in <1 minute due to reverse current.
	16	CB INST: SIG CONDR 2 - open CB EPS: DISP - open	
	11,16	CROSS TIE BUS (2) - open	
	16	6. CB EPS: INV 2 - open	
	14	7. EPS: INVERTER sw - OFF	
	11	8. CB/AC BUS B: NUM LTG - open BUS TIE INV 2 - open CB/AC BUS A: BUS TIE INV 2 - open INTGL LTG - open	
	16 11	9. CB EPS: DES ECA CONT - open CB EPS: DES ECA CONT - open Verify cb status per Final Subsystem Deactivation	See figure 4-15 (Sheets 3 of 4 and 4 of 4).
		10. Disable LM cabin repressurization system.	Ref para 4.14.6.

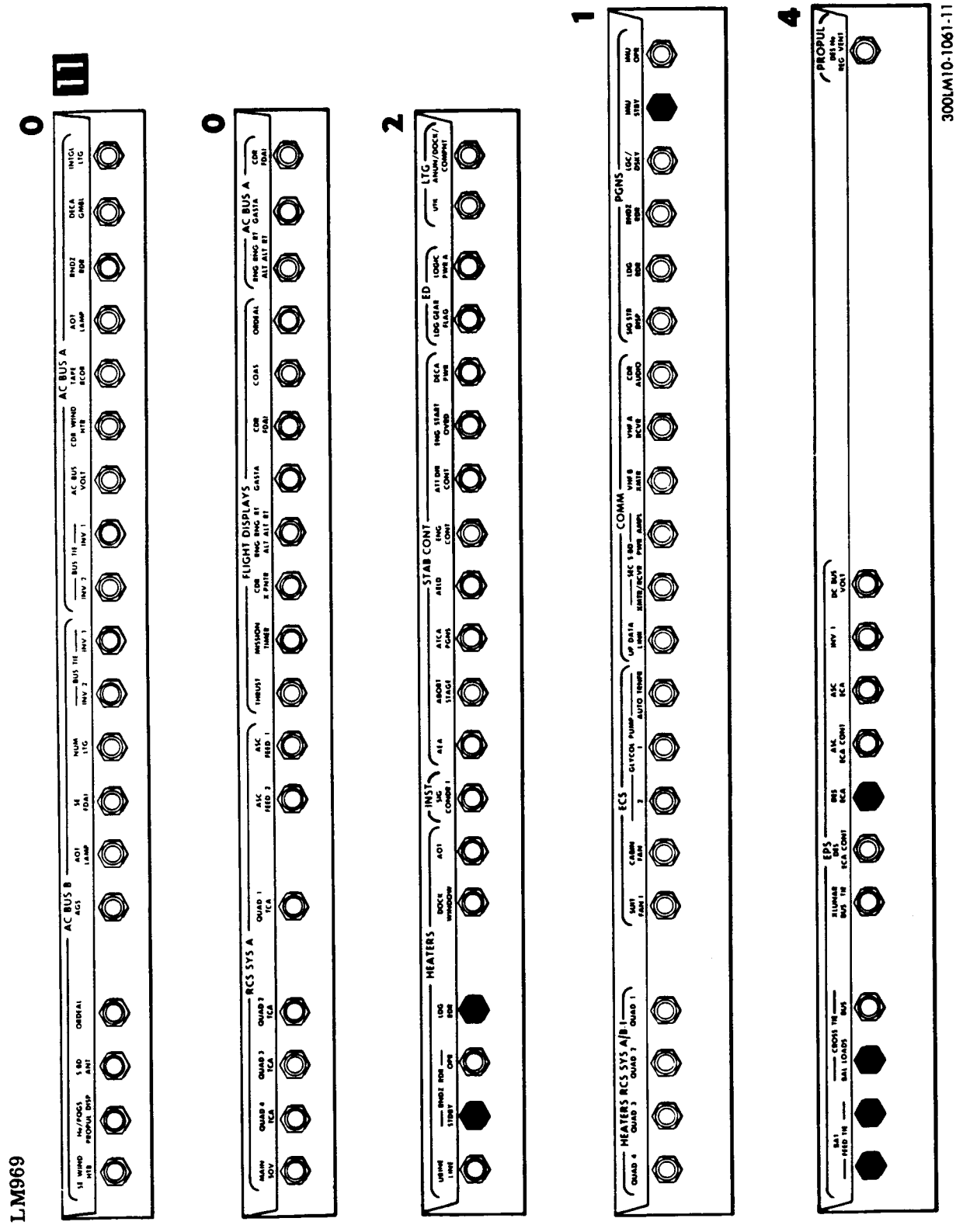

Figure 4-15. Final Subsystem Deactivation, Panel 11 (Sheet 3 of 4)

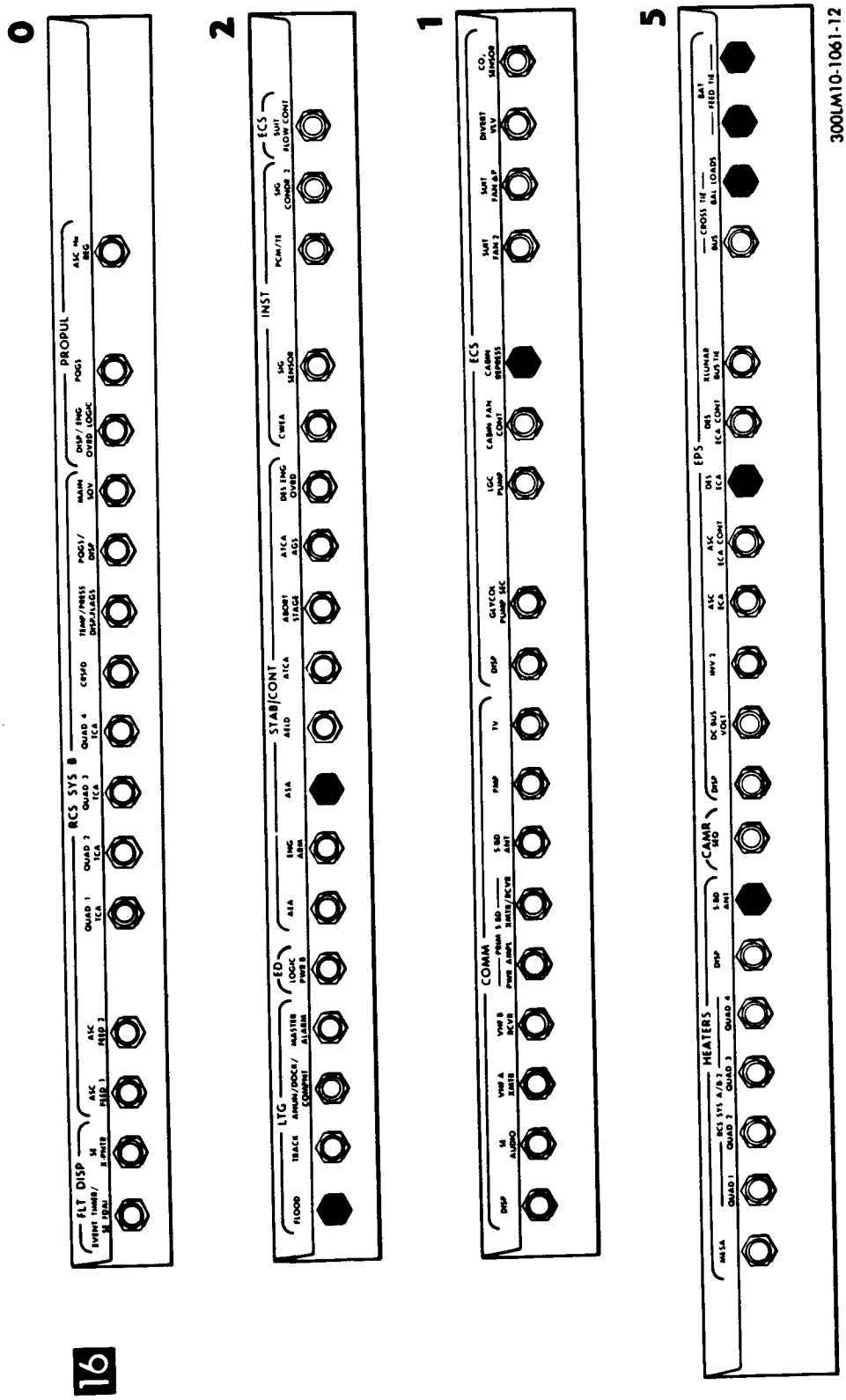

Figure 4-15. Final Subsystem Deactivation, Panel 16 (Sheet 4 of 4)

CREW-MAN	PNL	PROCEDURES	REMARKS
		4.3.3 FINAL SUBSYSTEM ACTIVATION (cont)	
		11. Perform Intravehicular Transfer to CSM.	Ref para 4.14.4.
		12. CSM transfer power from LM to CSM.	Power may be momentarily interrupted due to transfer effects. Online equipment should not suffer degradation. Equipment remaining on line via translunar bus: S-band steerable antenna heater Landing radar heater Rendezvous radar standby heater IMU heater ASA heater DES ECA cont (2) Overhead floodlights remain on while overhead hatch is open.
		4.3.4 LM TRANSFER TO CSM POWER	
		4.3.4.1 LM Transfer to CSM Power (Unstaged)	Assumptions: (1) Descent batteries are on low-voltage taps, (2) LMP is receiving life support via transfer umbilical, (3) procedure is performed just before LMP intravehicular transfer to CSM, and (4) open-circuited reset line between CSM reset switch and LM relay junction box (RJB) prohibits descent battery HV/LV off signal.
	16	1. CB EPS: XLUNAR BUS TIE - close CB INST: SIG CONDR 2 - close CB EPS: DISP - close DES ECA CONT - close	
	11	CROSS TIE BUS - open XLUNAR BUS TIE - open DES ECA CONT - open ASC ECA CONT - open ASC ECA - open INV 1 - open DC BUS VOLT - open	
	14	2. EPS: CDR BAT 3 sw - OFF/RESET; tb - bp CDR BAT 4 LO V sw - OFF/RESET; tb - bp LMP BAT 1 HI V sw - OFF/RESET; tb - bp, then ON; tb - gray LMP BAT 2 sw - OFF/RESET; tb - bp	
		3. Coordinate transfer of power with CSM crewman.	

SUBSYS DEACT

LM 971

CREW-MAN	PNL	PROCEDURES	REMARKS
		4.3.4.1 LM Transfer to CSM Power (Unstaged) (cont)	
		CAUTION Step 4 causes loss of vehicle lighting until power transfer to CSM is completed.	
	16	4. CB EPS: BAT FEED TIE (2) - open	
		5. Request CSM crewman to transfer power from LM to CSM.	
		6. When lighting is restored: EPS: LMP BAT 1 HI V sw - OFF/RESET; tb - bp	
	16	7. CB INST: SIG CONDR 2 - open CB EPS: DISP - open DES ECA CONT - open XLUNAR BUS TIE - open BAT FEED TIE (2) - close	
	11	8. CB EPS: DES ECA CONT - open	
		4.3.4.2 LM Transfer to CSM Power (Staged)	
	14	1. EPS: ED VOLTS sw - OFF POWER/TEMP MON sel - ED/OFF INVERTER sw - OFF	
	16	2. All cb's - open, except: CB LTG: FLOOD - close CB S/C: ASA - close CB INST: SIG CONDR 2 - close CB HTR: S BD ANT - close CB EPS: DISP - close ASC ECA - close ASC ECA CONT - close XLUNAR BUS TIE - close BAT FEED TIE (2) - close	

LM 32

CREW-MAN	PNL	PROCEDURES	REMARKS
		4.3.4.2 LM Transfer to CSM Power (Staged) (cont)	
	11	3. All cb's - open, except: CB LTG: UTIL - close CB PGNS: IMU STBY - close CB EPS: BAT FEED TIE (2) - close CROSS TIE BAL LOADS - close ASC ECA CONT - close CAUTION Step 4 causes loss of vehicle utility lights until power transfer to CSM is completed.	
	14.	4. EPS: BAT 6 NORMAL CDR FEED sw - OFF/RESET; tb - bp	
		5. Coordinate power transfer with CSM crewman.	
		6. Request CSM crewman to transfer power from LM to CSM. CAUTION Step 7 causes loss of vehicle floodlights until power transfer to CSM is completed.	
		7. When utility lighting is restored: EPS: BAT 5 NORMAL LMP FEED sw - OFF/RESET; tb - bp	
	16	8. CB EPS: CROSS TIE BAL LOADS - close	Vehicle floodlights are restored.
		9. CB INST: SIG CONDR 2 - open CB EPS: DISP - open ASC ECA - open ASC ECA CONT - open XLUNAR BUS TIE - open	Equipment remaining on line via CSM-LM electrical umbilical: S-band steerable antenna heater IMU heater ASA heater Overhead floodlights remain on while overhead hatch is open.

SUBSYS DEACT

CREW-MAN	PNL	PROCEDURES	REMARKS
		4.3.4.2 LM Transfer to CSM Power (Staged) (cont)	
	11	10. CB EPS: ASC ECA CONT - open	
		11. CB LTG: UTIL - open	
		12. Perform Intravehicular Transfer to CSM.	Ref para 4.14.4.
		4.3.5 LM TRANSFER TO LM LV POWER (BACKUP)	Assumptions: (1) Crewman is in LM, (2) CSM maintains power to LM, and (3) short-circuited set line between CSM power switch and LM deadface relay (DFR) prevents setting descent battery low-voltage set coil from CSM.
	16	1. CB EPS: XLUNAR BUS TIE - close CB INST: SIG CONDR 2 - close CB EPS: DISP - close DES ECA CONT - close BAT FEED TIE (2) - open	
	14	2. EPS: LMP BAT 1 HI V sw - ON; tb - gray	
		3. Coordinate power transfer with CSM crewman.	
		CAUTION Step 4 causes loss of vehicle lighting until power transfer to LM is completed. Keep fingers on panel 16 CB EPS: BAT FEED TIE (2).	
		4. Request CSM crewman to remove CSM power.	
		WARNING Do not perform step 5 until vehicle lights are off.	
	16	5. CB EPS: BAT FEED TIE (2) - close	Lighting is restored.
	14	6. EPS: LMP BAT 2 sw - OFF/RESET; tb - bp, then ON; tb - gray LMP BAT 1 LO V sw - OFF/RESET; tb - bp, then ON; tb - LO CDR BAT 3 sw - OFF/RESET; tb - bp CDR BAT 4 LO V sw - ON, tb - LO LMP BAT 2 sw - OFF/RESET; tb - bp	

CREW-MAN	PNL	PROCEDURES	REMARKS
		4.3.5 LM TRANSFER TO LM LV POWER (BACKUP) (cont)	
	16	7. CB INST: SIG CONDR 2 - open CB EPS: DISP - open DES ECA CONT - open XLUNAR BUS TIE - open	
		4.3.6 CSM TRANSFER TO LM POWER	
		4.3.6.1 LM Initial Power-Up (CSM Powered Down)	
	16	1. CB INST: SIG CONDR 2 - close CB EPS: DISP - close ASC ECA CONT - close	
	14	2. EPS: BAT 5 NORMAL LMP FEED sw - ON; tb - gray	
	11,16	3. CB EPS: DES ECA CONT - close XLUNAR BUS TIE - close	
	14	EPS: LMP BAT 1 LO V sw - ON; tb - LO BAT 5 NORMAL LMP FEED sw - OFF/RESET; tb - bp LMP BAT 2 sw - ON; tb - gray CDR BAT 3 sw - ON; tb - gray CDR BAT 4 LO V sw - ON; tb - LO DES BATS tb - gray BAT 5 BACKUP CDR FEED tb - bp BAT 6 NORMAL CDR FEED tb - bp BAT 6 BACKUP LMP FEED tb - bp	
	16	CB EPS: ASC ECA CONT - open	
		4. Perform EPS Activation & Checkout.	Ref para 4.2.2.

SUBSYS DEACT

LM 980, LM 3191, LM 3201

CREW-MAN	PNL	PROCEDURES	REMARKS
		4.3.6.2 CSM Transfer to LM Power (Staged)	
	11	1. CB LTG: UTIL - close	
	16	2. CB EPS: XLUNAR BUS TIE - close	
		3. CB INST: SIG CONDR 2 - close CB EPS: DISP - close ASC ECA - close ASC ECA CONT - close	
		CAUTION Step 4 causes loss of vehicle floodlights until power transfer to LM is completed.	
	16 14	4. CB EPS: CROSS TIE BAL LOADS - open EPS: BAT 5 NORMAL LMP FEED sw - ON; tb - gray	
		CAUTION Do not use Lunar Bat.	
		5. Coordinate power transfer with CSM crewman.	
		CAUTION Step 6 causes loss of vehicle utility lights until power transfer to LM is completed.	
		6. Request CSM crewman to transfer power from CSM to LM.	
	14 16	7. EPS: BAT 6 NORMAL CDR FEED sw - ON; tb - gray CB EPS: CROSS TIE BAL LOADS - close	
	11	8. CB EPS: ASC ECA - close ASC ECA CONT - close XLUNAR BUS TIE - close	

LM 986, LM 3191, LM 3201

CREW-MAN	PNL	PROCEDURES	REMARKS
		4.3.6.3 CSM Transfer to LM Power (Unstaged)	
	16	1. CB INST: SIG CONDR 2 - close	
		CB EPS:	
		DISP - close	
	11,16	X-LUNAR BUS TIE - close	
		DES ECA - close	
		DES ECA CONT - close	
		ASC ECA CONT - close	
		ASC ECA - close	
	11,16	CROSS TIE BAL LOADS - close	
		CROSS TIE BUS - close	
	16,11	CROSS TIE BAL LOADS - close	
	14	EPS: BAT 6 NORMAL CDR FEED sw - ON; tb - gray	
		2. Connect LM/CSM umbilicals.	
		3. CSM configure for LM power transfer.	Circuit breakers limit current to 15 amperes.
		4. After receiving "GO" from CSM:	
		EPS: BAT 1, 2, 3, & 4 tb - gray	
		If not:	
	14	EPS:	
		LMP BAT 1 HI V sw - ON; tb - gray	
		(LMP BAT 2 sw - ON; tb - gray)	
		(CDR BAT 3 sw - ON; tb - gray)	
		(CDR BAT 4 HI V sw - ON; tb - gray)	
	16	5. CB INST: SIG CONDR 2 - open	
		CB EPS: DISP - open	
	14	6. EPS: BAT 6 NORMAL CDR FEED sw - OFF/RESET; tb - bp	
	11,16	CB EPS: ASC ECA CONT - open	

SUBSYS DEACT

LM 980, LM 3191, LM 3202

CREW-MAN	PNL	PROCEDURES	REMARKS
		4.3.6.4 CSM Transfer to LM Power (Staged) - Lifeboat	
	11	1. CB LTG: UTIL - close	
	16	2. CB EPS: XLUNAR BUS TIE - close	
		3. CB INST: SIG CONDR 2 - close CB EPS: DISP - close ASC ECA - close ASC ECA CONT - close	
	11	CB EPS: ASC ECA - close ASC ECA CONT - close XLUNAR BUS TIE - close	
	16 14	4. CB EPS: CROSS TIE BAL LOADS - open EPS: BAT 5 NORMAL LMP FEED sw - ON; tb - gray	
		5. Request CSM crewman to transfer power to CSM power.	
	14 16	6. EPS: BAT 6 NORMAL CDR FEED sw - ON; tb - gray CB EPS: CROSS TIE BAL LOADS - close	Circuit breakers limit current to 15 amperes.
		4.3.7 LM-TO-CSM POWER TRANSFER (UNSTAGED) (POWER REMOVAL FROM CSM/LM UMBILICAL)	Assumption: One ascent battery is feeding power to CDR bus.
		1. CSM configure for LM power removal.	
	16	2. CB INST: SIG CONDR 2 - close CB EPS:	
	11,16 16	CROSS TIE BAL LOADS - close DISP - close	
		3. Descent batteries still available -	
	14	EPS: LMP LUNAR BAT sw - OFF/RESET, then ON; tb - LMP	Full LM power is now removed from CSM.
		Descent batteries not available - EPS: BAT 1 (2, 3, 4, & LUNAR BAT) tb - bp	
	16	CB EPS: BAT FEED TIE (2) - open	
	14	EPS: LMP LUNAR BAT sw - OFF/RESET, then ON; tb - LMP	Full LM power is now removed from CSM.
		EPS: LMP LUNAR BAT sw - OFF/RESET; tb - bp	
	16	CB EPS: BAT FEED TIE (2) - close	
		4. CB INST: SIG CONDR 2 - open CB EPS: DISP - open	

PARA	TITLE	PAGE
4.4	G&C Reference Data	4.4-2
4.4.1	LGC/DSKY Restrictions	4.4-2
4.4.2	AEA/DEDA Restrictions	4.4-5
4.4.3	Jet Select Logic	4.4-8
4.4.4	LGC Programs	4.4-10
4.4.5	LGC Routines	4.4-11
4.4.6	Verb List	4.4-12
4.4.7	Noun List	4.4-14
4.4.8	Star/Planet List	4.4-26
4.4.9	Checklist Reference Codes (V50 N25)	4.4-28
4.4.10	Option Codes (V04 N06, V04 N12 or V05 N06)	4.4-28
4.4.11	Alarm Codes (V05 N09)	4.4-29
4.4.12	AOT Detent/LPD/COAS Codes (N70, N71)	4.4-32
4.4.13	Flagwords	4.4-33
4.4.14	AGS Selector Logic	4.4-49
4.4.15	DEDA Input List	4.4-51
4.4.16	DEDA Output List	4.4-54
4.4.17	DEDA Accessible Parameters List	4.4-57

CREW-MAN	PNL	PROCEDURES	REMARKS
		4.4 G&C REFERENCE DATA	
		4.4.1 LGC/DSKY RESTRICTIONS	
		The following restrictions apply to use of the LGC and DSKY:	
		a. For display verbs 01 through 07, monitor verbs 11 through 17, and load verbs 21 through 25, the number of components of the verb must not exceed the number of components of the noun being used. If this restriction is not observed, the OPR ERR lt goes on.	
		b. Mixing of octal and decimal data in multicomponent load verbs is not permitted. Data components must be all decimal or all octal.	
		c. Loaded machine addresses must be in octal form.	
		d. The magnitude of data being loaded should not exceed that of the noun being used. If this restriction is not observed, OPR ERR lt goes on.	
		e. Decimal data must be preceded by a sign (+ or -). Leading zeroes need not be loaded when loading decimal data.	
		f. When loading time-only nouns, three data words (three registers) must be loaded (for hours, minutes, and seconds).	
		g. All data loads must be verified before pressing ENTR pb for the last register being loaded. If any data are incorrect, the register can be cleared by pressing CLR pb. Each successive pressing of the CLR pb clears the preceding register. This backing-up action occurs only on components called by the load verb.	
		h. Only one of the following extended verbs can be running at a time: 41, 42, 43, 47, 48, 49, 55, 63, 64, 67, 70, 71, 72, 73, 82, 83, 85, 89, 90, 91, and 92. Each of these verbs call Extended Verb Interlock Routine (R76). If an extended verb from R76 is running when another is selected, OPR ERR lt will go on.	
		i. Flashing VERB/NOUN requires operator action. The program in process is halted until appropriate action is taken.	
		j. Nouns 40, 44, 45, 61, 62, 64, 66, 68, 74, 75, 77, and 78 cannot be loaded by V24 or V25 or have components that cannot be loaded. Channel No. 7 cannot be loaded via noun 07 or 10. Channel No. 77 cannot be loaded via noun 07.	
		k. Most nouns contain useful data only when relevant computations are running. The following are exceptions: 1, 2, 3, 8, 9, 10, 15, 20, 21, 26, 27, 36, 38, 47, 65, 72 (if RR mode-LGC), R1 of 45, R2 of 46, and R2 of 66.	

RC 1600, LM 3231

CREW-MAN	PNL	PROCEDURES	REMARKS
		4.4.1 LGC/DSKY RESTRICTIONS (cont)	

1. If verb 37 is attempted within approximately 15 seconds of a fresh start or ISS turn-on, a PIPA failure will go undetected. To correct this condition, select P00 and reset IMODES 30, bit 5 (key V37E 00E; key V25 N07E 1277E, 20E, E).

m. Final Automatic Request Terminate Routine (R00) is not executed if V37 is flashing, until a proper response is made keying in two digits (program number), then ENTR.

n. Performing ICDU Zero (para 4.6.1.21) during LM Rendezvous Navigation Program (P20) (para 4.8.2.1) may result in a bad mark or designate.

o. An efficient attitude hold/rate command mode is not provided when docked with the CSM.

p. KALCMANU maneuver rate >0.5°/sec should not be used when docked with the CSM.

q. A 1°/sec loss of attitude results if a +X-jet fails on or off and is undetected.

r. A hardware restart removes track enable. If LM Rendezvous Navigation Program (P20) is in process, P20 is forced back to the beginning of RR Designate Routine (R21) and calls Preferred Tracking Attitude Routine (R61).

s. Deleted

t. Deleted

u. Deleted

v. Any program can be terminated as follows: (1) via V34E at any flashing display except at N25 in P06; N49 in P20; N88 in P51, P52, or P57; N64 in P64; N60 in P66; (V34 response to an extended verb display will terminate the extended verb and not the program running underneath) of (2) via V37E XXE at any flashing or nonflashing display, except N25 in P06.

w. Deleted

x. Restarts will terminate automatic attitude maneuvers and cause RESTART lt or PROG lt to come on with FL V50 N18. To recover, key PRO and continue.

y. Deleted

z. Deleted

aa. If P20 or P22 is incorporating a mark, another program should not be selected via V37 until mark counter is incremented in V16 N45 display. If this is not desired, V95 can be used to stop updating. Wait 15 seconds before selecting another program. V80 or V81 must be entered to start state vector updating again.

G & C REF DATA

RC 1599

CREW-MAN	PNL	PROCEDURES	REMARKS
		4.4.1 LGC/DSKY RESTRICTIONS (cont)	
		ab. VG or ΔV displays in control coordinates, N85 or N83 are based on reading accelerometers every 2 seconds. Displays, however, are asynchronous one-second monitors; therefore, result is a possible 0.5- to 1.5-second delay between application of ΔV and visible result.	
		ac. When loading decimal data, ENTR may change last digit of loaded data. Data shown on DSKY may be displayed modulo maximum value allowed or may be data from a previous calculation stored into cells picked up for display. The crew is encouraged to always write over data with desired information.	
		ad. During periods of high computer activity, selection of certain extended verbs (notably V67, V82, V83, V85, V90) may result in program alarms 31201 or 31202. Extended verb activity is lost and verb must be reselected.	
		ae. KEY REL lt remains on after V37 until new program is started. DSKY should not be used until KEY REL lt goes off and new program number is displayed.	
		af. VEC POINT routine may compute large OGA when +X-axis must be rotated approximately 180°. Sensitivity to such changes becomes greater as magnitude approaches 180°. If desired, maneuver manually in pitch approximately 30° and then have solution recomputed by keying PRO on FL V50 N18 while not in PGNCS automatic mode.	
		ag. No crew initiated verb/noun is restart protected.	
		ah. A restart will terminate extended verbs.	
		ai. PRO pb must be depressed for minimum of 120 milliseconds for proceed function. If PRO pb fails, use V33E for proceed functions.	
		aj. PRO pb is ignored when VERB ind displays V21, V22, or V23 and OPR ERR lt is lit. To accomplish a proceed function in response to a flashing load verb, V PRO should be used.	
		ak. If V37E XXE, ABORT pb, or ABORT STAGE pb is used or if software restart occurs when RR/LR is being read, a 520 alarm may occur. Data that was being read is not used. To recover, key RSET and continue.	
		al. Deleted	
		am. If an extended verb has been selected during a mission program, with normal displays, the extended verb logic initially blanks the DSKY. Any response during the time the DSKY is blank would do one of the following; (1) respond to a normal mission program display underneath the extended verb or (2) respond to the first display in the extended verb, which could be initiated simultaneously with crew response. In general, do not key a response (PRO, ENTR, V32E, V33E, V34E) to either a blank DSKY or a nonflashing display.	
		an. Do not select P20 in the update mode before completion of P66. W-matrix initialization will destroy the erasable memory (E-memory) descent targets.	

RC 1599

CREW-MAN	PNL	PROCEDURES	REMARKS
		4.4.1 LGC/DSKY RESTRICTIONS (cont)	
		ao. V92, which calls IMU performance test program (P07), is for ground use only and is inhibited by the NODOP07 flag. The flag is set by V37 logic. If this restriction is not observed, the OPR ERR lt goes on.	

RC 1601

CREW-MAN	PNL	PROCEDURES	REMARKS
		4.4.1 LGC/DSKY RESTRICTIONS (cont)	

ap. To avoid computational errors of up to 1.1 degrees, in use of STAR/PLANET codes 46, 47, 50 (for sun, earth, moon respectively) (digits DE of R1 in N70, 71) if the sun, earth or moon are to be sighted on select code 00 (planet), and have MSFN uplink unit vectors.

aq. If an 8 or 9 is pushed while loading a register which was not preceded by a plus or minus sign, OPR ERR lt will be lit and the 8 or 9 is rejected. Remaining characters may then be supplied or register cleared and loading begun again.

4.4.2 AEA/DEDA RESTRICTIONS

The following restrictions apply to use of the AEA and DEDA:

a. The CLR pb must be pressed before every DEDA entry.

b. All addresses are in octal form. They must not be less than 26 (lowest numbered accessible address) nor greater than 704 (highest numbered accessible address).

c. A sign (+ or -) must be entered after the address when loading data.

d. An octal quantity with a digit greater than 7 or a number greater than the allowable range of the address must not be entered.

e. A DEDA entry of -00000 should not be made unless specified in a particular procedure.

f. If more than 4 hours elapse with the AGS operating and no thrust along the X-axis, perform one of the following to prevent overflow of the accumulated velocity counter:

Staged: Key DEDA C 404+00000E
Unstaged: Key DEDA C 404-12345E

g. If an accelerometer malfunctions, all AGS equations function properly and all guidance modes can be used as long as thrusting is performed orthogonal to the axis of the failed accelerometer, and the scale factor and bias compensation constant of the failed accelerometer are set to zero as follows:

X-axis: Key DEDA C 534+00000E
C 540+00000E
Y-axis: Key DEDA C 535+00000E
C 541+00000E
Z-axis: Key DEDA C 536+00000E
C 542+00000E

CREW-MAN	PNL	PROCEDURES	REMARKS
		4.4.2 AEA/DEDA RESTRICTIONS (cont)	

h. In attitude hold (400+00000) and guidance steering (400+10000), X-axis override can be accomplished through any desired angle. In Z-axis steering (400+20000), Z-axis override can be accomplished through any desired angle. If override of any other steering channel is desired, attitude excursion should be <90° from AGS-computed orientation.

i. Do not enter +00000 into address 414. This is done automatically after completion of any navigation initialization. If this entry is made manually, it is treated as a +10000 and causes the program to search the PGNCS downlink for an identification word which, when located, could destroy LM and CSM state vectors. If +10000 is entered manually into address 414, PGNCS downlink search can be eliminated by keying DEDA C 563+00000E.

j. If lunar surface flag is inadvertently set during earth orbit, reset lunar surface flag as follows:
Key DEDA C 604+00000 (only the sign is significant)

k. DEDA quantities which are displayed in octal have a least quantization four times the internal computer scaling.

l. When keying DEDA, each pushbutton should be depressed to its limit of travel to ensure making good switch contact.

m. The scaling of certain DEDA values is mission-dependent. When these values appear in the DEDA listings of paragraphs 4.4.15, 4.4.16, and 4.4.17, quantization is given. When these values appear in the body of this document, quantization is defined with lunar scaling first, followed by earth scaling (e.g., 0.1/1 fps).

n. All thrusting under AGS control must be done using External ΔV guidance routine (410+50000), or Orbit Insertion guidance routine (410+00000).

o. To preclude any DEDA operation problem due to computer timing, the following rules should be observed:
1. At least 0.6 second shall elapse between the pressing of any two DEDA control pushbuttons (CLR, ENTR, READOUT, or HOLD), except when pressing the CLR pb to erase the previous operation.
2. After a DEDA entry, do not press the ENTR or READOUT pb within 1.5 seconds of the time the DEDA display has gone blank after pressing the ENTR pb.

p. DEDA address 277 is angle between Z body axis and local horizon projected into $\underline{U}1$-$\underline{V}1$ plane ($\underline{U}1$ is LM local vertical, $\underline{V}1$ is downrange and parallel to CSM orbit plane). This quantity will agree with PGNCS angle only when LM yaw angle is 0° or 180°.

q. DEDA should not be used to enter data while CB/AC BUS A: RNDZ RDR or CB/AC BUS A: GASTA or CB ECS: GLYCOL PUMP 1 (or 2) is being opened or closed nor while LTG: OVERRIDE INTEGRAL sw or GLYCOL SEL is being operated.

r. The DEDA detects certain operator errors. The OPR ERR lt on the face of the DEDA goes on when these errors occur. False OPR ERR lt indications resulting from EMI on discrete lines may also occur. The light remains on until the CLR pb is pushed. The DEDA is then ready for a new instruction.

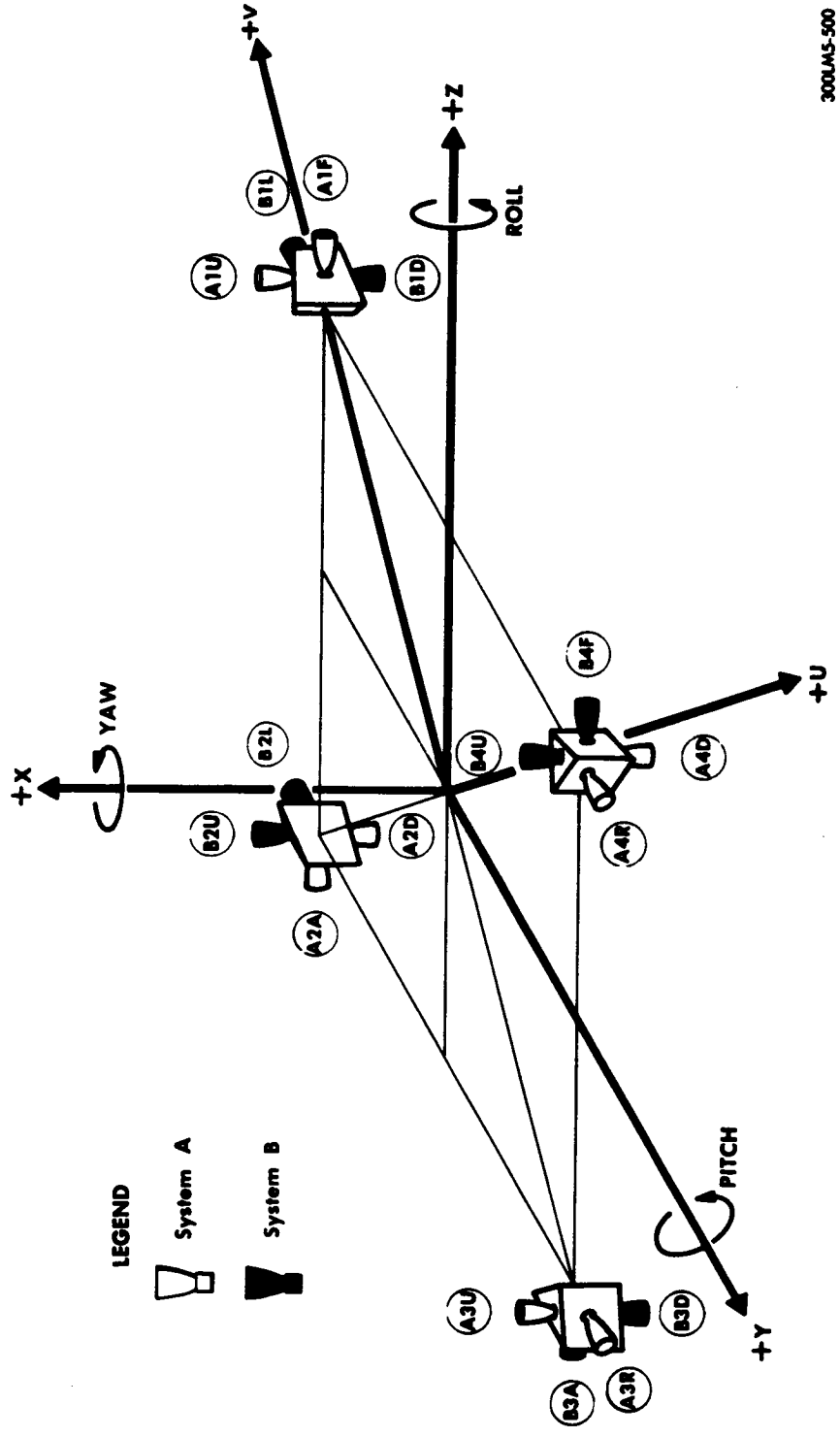

Figure 4-16. RCS Thruster Geometry

CREW-MAN	PNL	PROCEDURES	REMARKS

4.4.3 JET SELECT LOGIC

Table 4-1 is a general listing of the basic RCS engine logic for DAP-controlled translation and rotation maneuvers of the LM. Under DAP control, the jets selected for a particular maneuver are arranged so that the first entry is the optimum selection for the specified maneuver.

Table 4-1. RCS Jet Select Logic

Maneuver	B A B A 4 4 4 4 U D F R	A B B A 3 3 3 3 U D A R	B A A B 2 2 2 2 U D A L	A B A B 1 1 1 1 U D F L
A. DAP JET SELECTION - ROTATION				
+P (Yaw left), four-jet	X	X	X	X
two-jet	Alternating pulses between A4R, B2L & A1F, B3A			
-P (Yaw right), four-jet	X	X	X	X
two-jet	Alternating pulses between B4F, A2A & B1L, A3R			
+P (Alternative)*, two-jet		X		X
	X		X	
	X	X		
		X	X	
			X	X
	X			X
-P (Alternative)*, two-jet		X		X
	X		X	
		X	X	
			X	X
	X			X
	X	X		
+U (Pitch up, roll right)**, two-jet		X		X
-U (Pitch down, roll left)**, two-jet		X		X
+V (Pitch down, roll right)**, two-jet	X		X	
-V (Pitch up, roll left)**, two-jet	X		X	

* Alternative two-jet policies when a P rotational jet fails.
** If one U or V rotational jet fails, the other jet completes rotation.

CREW-MAN	PNL	PROCEDURES	REMARKS

4.4.3 JET SELECT LOGIC (cont)

Table 4-1. RCS Jet Select Logic (cont)

Maneuver	B4U	A4D	B4F	A4R	A3U	B3D	B3A	A3R	B2U	A2D	A2A	B2L	A1U	B1D	A1F	B1L
B. DAP JET SELECTION - TRANSLATION																
+X-Translation, four-jet		X				X				X				X		
two-jet		X								X						
						X								X		
-X-Translation, four-jet	X				X				X				X			
two-jet					X								X			
	X								X							
+Y-Translation												X				X
-Y-Translation				X				X								
+Z-Translation							X				X					
-Z-Translation			X												X	
+U (+Z & +Y) Translation							X				X	X				X
-U (-Z & -Y) Translation			X	X				X							X	
+V (+Z & -Y) Translation				X			X	X			X					
-V (-Z & +Y) Translation			X									X			X	X
+Y-Tack Translation***	Alternating pulses between B2L, B4F & A2A, B2L Alternating pulses between B1L, A1F & B1L, B3A															
-Y-Tack Translation***	Alternating pulses between A4R, B4F & A4R, A2A Alternating pulses between A3R, B3A & A3R, A1F															
+Z-Tack Translation***	Alternating pulses between B3A, A3R & B3A, B1L Alternating pulses between A2A, B2L & A2A, A4R															
-Z-Tack Translation***	Alternating pulses between B4F, A4R & B4F, B2L Alternating pulses between A1F, A3R & A1F, B1L															

*** Y- and Z-tack translations are commanded when conventional Y or Z two-jet translations are not available (jet failure). Tacking alternations are done every 0.1 second.

LM 3231

CREW-MAN	PNL	PROCEDURES	REMARKS

4.4.4 LGC PROGRAMS

No.		Phase	Paragraph
00	LGC Idling	Service	4.6.1.6
06	LGC Power-Down	Service	4.6.1.2
12	Powered Ascent	Ascent	4.10.3.1
20	Rendezvous Navigation	Coast	4.8.2.1
21	Ground Track Determination	Coast	4.8.1.1
22	Lunar Surface Navigation	Coast	4.8.3.1
25	Preferred Tracking Attitude	Coast	4.6.1.19
27	LGC Update	Coast	4.6.1.7
30	External ΔV	Prethrust	4.7.1.1
32	Coelliptic Sequence Initiation (CSI)	Prethrust	4.7.1.2
33	Constant Δ Altitude (CDH)	Prethrust	4.7.1.3
34	Transfer Phase Initiation (TPI)	Prethrust	4.7.1.4
35	Transfer Phase Midcourse (TPM)	Prethrust	4.7.1.5
40	DPS Thrust	Thrust	4.10.1.1, 4.10.1.7
41	RCS Thrust	Thrust	4.10.1.3
42	APS Thrust	Thrust	4.10.1.2, 4.12.10
47	Thrust Monitor	Thrust	4.10.1.4, 4.11.1, 4.12.9
51	IMU Orientation Determination	Alignment	4.9.1.1
52	IMU Realign	Alignment	4.9.1.2
57	Lunar Surface Align	Alignment	4.9.3.1
63	Braking Phase	Descent	4.10.2.1
64	Approach Phase	Descent	4.10.2.2
66	Landing Phase (ROD)	Descent	4.10.2.3
68	Landing Confirmation	Descent	4.10.2.4
70	DPS Abort	Abort	4.10.3.2
71	APS Abort	Abort	4.10.3.3
72	CSM Coelliptic Sequence Initiation Targeting	Backup	4.7.4.1
73	CSM Constant Δ Altitude Targeting	Backup	4.7.4.2
74	CSM Transfer Phase Initiation Targeting	Backup	4.7.4.3
75	CSM Transfer Phase Midcourse Targeting	Backup	4.7.4.4
76	Target ΔV (CSM)	Backup	4.7.2.2
77	Target ΔV (LM)	Backup	4.7.2.3

CREW-MAN	PNL	PROCEDURES	REMARKS

4.4.5 LGC ROUTINES

No.		Paragraphs	Crew Callable by Extended Verb
00	Final Automatic Request Terminate	4.6.1.36	V37
01	Erasable and Channel Modification	4.6.1.37	N/A
02	IMU Status Check	N/A	N/A
03	DAP Data Load	4.6.1.8	V48
04	RR/LR Self-Test	4.6.3.2, 4.6.3.8	V63
05	S-Band Antenna	4.6.1.30	V64
09	R10/R11/R12 Service	N/A	N/A
10	Landing Analog Displays	N/A	N/A
11	Abort Discretes Monitor	N/A	N/A
12	Descent State Vector Update	N/A	N/A
13	Landing Automatic Modes Monitor	N/A	N/A
20	LR/RR Data Read	N/A	N/A
21	RR Designate	N/A	N/A
22	RR Data Read	N/A	N/A
23	RR Manual Acquisition	N/A	N/A
24	RR Search	N/A	N/A
25	RR Monitor	N/A	N/A
26	Lunar Surface RR Predesignate	N/A	N/A
30	Orbit Parameter Display	4.8.1.2	V82
31	Rendezvous Parameter Display	4.6.1.11	V83
33	LGC/CMC Clock Synchronization	4.6.1.15	V55
36	Rendezvous Out-of-Plane Display	4.7.2.1	V90
40	DPS/APS Thrust Fail	N/A	N/A
41	State Vector Integration (MID to AVE)	N/A	N/A
47	AGS Initialization	4.6.1.18	V47
50	Coarse Align	N/A	N/A
51	In-Flight Fine Align	N/A	N/A
52	Automatic Optics Positioning	N/A	N/A
53	AOT Mark	N/A	N/A
54	Sighting Data Display	N/A	N/A
55	Gyro Torquing	N/A	N/A
56	Terminate Tracking	N/A	N/A
57	Markrupt	N/A	N/A
58	Celestial Body Definition	N/A	N/A
59	Lunar Surface Sighting Mark	N/A	N/A
60	Attitude Maneuver	N/A	N/A
61	Preferred Tracking Attitude	N/A	N/A
62	Crew-Defined Maneuver	4.6.1.9	V49
63	Rendezvous Final Attitude	4.6.1.10	V89
65	Fine Preferred Tracking Attitude	N/A	N/A
76	Extended Verb Interlock	N/A	N/A
77	LR Spurious Test	4.6.3.10	V78

CREW-MAN	PNL	PROCEDURES	REMARKS	
		4.4.6 VERB LIST		
		No. **Regular Verbs**		
		01 Display octal component 1 in R1		
		02 Display octal component 2 in R1		
		03 Display octal component 3 in R1		
		04 Display octal components 1, 2 in R1, R2		
		05 Display octal components 1, 2, 3 in R1, R2, R3		
		06 Display decimal in R1; or R1, R2; or R1, R2, R3		
		07 Display double precision decimal in R1, R2	Test only	
		11 Monitor octal component 1 in R1		
		12 Monitor octal component 2 in R1		
		13 Monitor octal component 3 in R1		
		14 Monitor octal components 1, 2 in R1, R2		
		15 Monitor octal components 1, 2, 3 in R1, R2, R3		
		16 Monitor decimal in R1; or R1, R2; or R1, R2, R3		
		17 Monitor double precision decimal in R1, R2	Test only	
		21 Load component 1 into R1		
		22 Load component 2 into R2		
		23 Load component 3 into R3		
		24 Load components 1, 2 into R1, R2		
		25 Load components 1, 2, 3 into R1, R2, R3		
		27 Display fixed memory		
		30 Request executive		
		31 Request waitlist		
		32 Recycle program		
		33 Proceed without DSKY input		
		34 Terminate function		
		35 Test lights	Use in POO only.	
		36 Request fresh start		
		37 Change program	Major mode	
		Extended Verbs		**Paragraph**
		40 Zero CDU	Specify N20 or N72	4.6.1.21, 4.6.1.22
		41 Coarse-align CDU	Specify N20 or N72	4.9.1.3, 4.6.3.3
		42 Fine-align IMU		4.9.1.4
		43 Load IMU attitude error meters	Test only	4.6.1.23
		44 Terminate RR continuous designate	V41 N72, option 2	4.6.3.6
		47 Initialize AGS (R47)		4.6.1.18
		48 Start DAP Data Load Routine (R03)		4.6.1.8
		49 Start crew-defined maneuver (R62)		4.6.1.9
		50 Please perform		N/A
		52 Mark cursor		N/A

LM 3231

CREW-MAN	PNL	PROCEDURES	REMARKS

4.4.6 VERB LIST (cont)

No.	Extended Verbs		Paragraph
53	Mark spiral		N/A
54	Mark X or Y reticle		N/A
55	Increment LGC time (decimal)		4.6.1.24
56	Terminate tracking (R56)		N/A
57	Permit LR update		N/A
58	Inhibit LR update		N/A
59	Command LR to position 2		4.6.3.9
60	Display LM attitude rates on FDAI error needles		N/A
61	Display DAP attitude error		4.6.1.32
62	Display total attitude error		4.6.1.33
63	RR/LR self-test (R04)		4.6.3.2, 4.6.3.8
64	Start S-band antenna routine (R05)		4.6.1.30
65	Disable U & V jets during DPS burn		N/A
66	Vehicles attached; move this vehicle state vector to other vehicle.		4.6.1.35
67	W-matrix rss error display		4.6.1.34
68	Bypass lunar terrain model computations		N/A
69	Restart		4.6.1.29
70	Update liftoff time		4.6.1.7
71	Universal update, block address		4.6.1.7
72	Universal update, single address		4.6.1.7
73	Update LGC time (octal)		4.6.1.7
74	Initialize erasable dump via downlink (42 sec)		4.6.1.25
75	Enable U & V jets during DPS burn		N/A
76	Minimum impulse command mode		N/A
77	Rate command and attitude hold mode		N/A
78	Start LR spurious return test (R77)		4.6.3.10
79	Stop LR spurious return test (R77)		4.6.3.10
80	Update LM state vector		N/A
81	Update CSM state vector		N/A
82	Request orbit parameter display (R30)		4.8.1.2
83	Request rendezvous parameter display (R31)		4.6.1.11
85	Display RR LOS azimuth & elevation		N/A
89	Start rendezvous final attitude maneuver (R63)		4.6.1.10
90	Request rendezvous out-of-plane display (R36)		4.7.2.1
91	Show Banksum		4.6.1.12
92	Start IMU performance tests	For ground use only.	N/A
93	Enable W-Matrix Initialization		4.6.1.26

CREW-MAN	PNL	PROCEDURES	REMARKS
		4.4.6 VERB LIST (cont)	
		No. — Extended Verbs	
		95 No update of either state vector	
		96 Interrupt integration and go to P00	Ref para 4.6.1.31. Do not use during P20 when CSM state vector is being updated (V81) or after responding to FL V37 when leaving a program where average g was on.
		97 Perform engine fail procedure	
		99 Enable engine ignition	
		4.4.7 NOUN LIST	
		No. — Description/Component — Scale	
		01 Specify address (fraction)	
		R1 .XXXXX	
		R2 .XXXXX	
		R3 .XXXXX	
		02 Specify address (whole)	
		R1 XXXXX	
		R2 XXXXX	
		R3 XXXXX	
		03 Specify address (degree)	
		R1 XXX.XX°	
		R2 XXX.XX°	
		R3 XXX.XX°	
		04	
		R1 Gravity error angle XXX.XX°	
		R2 -----	
		R3 -----	
		05	
		R1 Sighting angle difference XXX.XX°	
		R2 -----	
		R3 -----	

CREW-MAN	PNL	PROCEDURES	REMARKS
		4.4.7 NOUN LIST (cont)	
		No. / Description/Component / Scale	
		06 Option code	
		R1 Code — Octal	
		R2 Desired option — Octal	
		R3 — Octal	R3 contains DATCODE during P57.
		07 Channel/Flagword/Erasable operator	Except channels 7 and 77.
		R1 ECADR — Octal	
		R2 Bit Identification — Octal	
		R3 Action — Octal	
		08 Alarm data	
		R1 Address — Octal	
		R2 BBCON — Octal	
		R3 ERCOUNT — Octal	
		09 Alarm codes	
		R1 First — Octal	
		R2 Second — Octal	
		R3 Last — Octal	
		10 Channel to be specified	All except channel 7. (Which may be read but not loaded via N10)
		R1 — Octal	
		R2 — -----	
		R3 — -----	
		11 TIG (CSI)	
		R1 — 00XXX hr	
		R2 — 000XX min	
		R3 — 0XX.XX sec	
		12 Option code	Used by extended verbs only
		R1 Code — Octal	
		R2 Desired option — Octal	
		R3 — -----	
		13 TIG (CDH)	
		R1 — 00XXX hr	
		R2 — 000XX min	
		R3 — 0XX.XX sec	

G & C REF DATA

CREW-MAN	PNL	PROCEDURES	REMARKS
		4.4.7 NOUN LIST (cont)	

No.	Description/Component	Scale
14	Deleted	
15	Increment address	
	R1	Octal
	R2	-----
	R3	-----
16	Time of event	
	R1	00XXX hr
	R2	000XX min
	R3	0XX.XX sec
18	Desired automatic maneuver FDAI angles	
	R1 Roll	XXX.XX°
	R2 Pitch	XXX.XX°
	R3 Yaw	XXX.XX°
20	Present ICDU angles	
	R1 Outer gimbal	XXX.XX°
	R2 Inner gimbal	XXX.XX°
	R3 Middle gimbal	XXX.XX°
21	PIPA's	
	R1 X	XXXXX pulses
	R2 Y	XXXXX pulses
	R3 Z	XXXXX pulses
22	Desired ICDU angles	
	R1 Outer gimbal	XXX.XX°
	R2 Inner gimbal	XXX.XX°
	R3 Middle gimbal	XXX.XX°

Used by extended verbs only

CREW-MAN	PNL	PROCEDURES	REMARKS
		4.4.7 NOUN LIST (cont)	

No.	Description/Component	Scale	REMARKS
24	ΔLGC clock time		
	R1	00XXX hr	
	R2	000XX min	
	R3	0XX.XX sec	
25	Checklist reference code (used with V50)		
	R1 Code	XXXXX	
	R2	-----	
	R3	-----	
26	Priority/delay, address, BBCON		
	R1	Octal	
	R2	Octal	
	R3	Octal	
27	Self-test switch (on/off)		Ref para 4.6.1.13.
	R1	XXXXX	
	R2	-----	
	R3	-----	
32	Time from perigee		
	R1	00XXX hr	
	R2	000XX min	
	R3	0XX.XX sec	
33	TIG		
	R1	00XXX hr	
	R2	000XX min	
	R3	0XX.XX sec	
34	Time of event		
	R1	00XXX hr	
	R2	000XX min	
	R3	0XX.XX sec	
35	Time from event		
	R1	00XXX hr	
	R2	000XX min	
	R3	0XX.XX sec	

CREW-MAN	PNL	PROCEDURES	REMARKS
		4.4.7 NOUN LIST (cont)	

No.	Description/Component	Scale	Remarks
36	Time of LGC clock		
	R1	00XXX hr	
	R2	000XX min	
	R3	0XX.XX sec	
37	TIG (TPI)		
	R1	00XXX hr	
	R2	000XX min	
	R3	0XX.XX sec	
38	State vector integration time (TET)		To monitor progress of state vector integration, time associated with progressing (regressing) state vector is available by keying V16 N38E. TET is time (GET) to which state vector integration process has presently calculated state vector.
	R1	00XXX hr	
	R2	000XX min	
	R3	0XX.XX sec	
40			
	R1 TFI/TFC	XXBXX min-sec	
	R2 VG	XXXX.X fps	
	R3 ΔV (Accumulated)	XXXX.X fps	
41	Navigation base		System test
	R1 Azimuth	XXX.XX°	
	R2 Elevation	XX.XXX°	
	R3	-----	
42			
	R1 Ha	XXXX.X nm	
	R2 Hp	XXXX.X nm	
	R3 ΔV	XXXX.X fps	
43			
	R1 Latitude	XXX.XX°	A + display indicates north
	R2 Longitude	XXX.XX°	A + display indicates east
	R3 Altitude	XXXX.X nm	
44			
	R1 Ha	XXXX.X nm	
	R2 Hp	XXXX.X nm	
	R3 TFF	XXBXX min-sec	

RC 1597, LM 3231

CREW-MAN	PNL	PROCEDURES	REMARKS
		4.4.7 NOUN LIST (cont)	

No.	Description/Component	Scale	REMARKS
45			
	R1 M	XXXXX marks	
	R2 TFI	XXBXX min-sec	
	R3 MGA	XXX.XX°	
46			Ref para 4.6.1.8 (R03).
	R1 DAP configuration	Octal	R1 may be displayed or changed effectively only in R03.
	R2 Switch Function Fail Code	Octal	R2 may be displayed and changed either in R03 or otherwise.
	R3	-----	
47			
	R1 LM weight	XXXXX lb	
	R2 CSM weight	XXXXX lb	
	R3	-----	
48			
	R1 Gimbal pitch trim	XXX.XX°	
	R2 Gimbal roll trim	XXX.XX°	
	R3	-----	
49			
	R1 ΔR	XXX.XX nm	R3 indicates out-of-tolerance parameter
	R2 ΔV	XXXX.X fps	X = 1, RR range X = 3, RR shaft angle
	R3 Source Code	0000X	X = 2, RR range rate X = 4, RR trunnion angle
51	S-band antenna		
	R1 Pitch	XXX.XX°	
	R2 Yaw	XXX.XX°	
	R3	-----	
52			
	R1 Central angle of active vehicle	XXX.XX°	
	R2	-----	
	R3	-----	
54			
	R1 Range	XXX.XX nm	
	R2 Range rate	XXXX.X fps	
	R3 θ	XXX.XX°	

CREW-MAN	PNL	PROCEDURES	REMARKS

4.4.7 NOUN LIST (cont)

No.	Description/Component	Scale
55		
	R1 N (apsidal crossings)	XXXXX
	R2 E	XXX.XX°
	R3 CENTANG	XXX.XX°
56		
	R1 RR LOS azimuth	XXX.XX°
	R2 RR LOS elevation	XXX.XX°
	R3	------
58		
	R1 Hp (Post-TPI)	XXXX.X nm
	R2 ΔV (TPI)	XXXX.X fps
	R3 ΔV (TPF)	XXXX.X fps
59	ΔV (LOS)	
	R1 LOS 1	XXXX.X fps
	R2 LOS 2	XXXX.X fps
	R3 LOS 3	XXXX.X fps
60		
	R1 V (Forward)	XXXX.X fps
	R2 H rate	XXXX.X fps
	R3 H	XXXXX ft
61		
	R1 TG	XXBXX min-sec
	R2 TFI	XXBXX min-sec
	R3 Crossrange	XXXX.X nm
62		
	R1 VI	XXXX.X fps
	R2 TFI	XXBXX min-sec
	R3 ΔV (Accumulated)	XXXX.X fps

CREW-MAN	PNB	PROCEDURES	REMARKS
		4.4.7 NOUN LIST (cont)	

No.	Description/Component	Scale	Remarks
63			
	R1 ΔH (LR alt minus LGC alt above landing site radius)	XXXXX ft	
	R2 H rate	XXXX.X fps	
	R3 H	XXXXX ft	
64			
	R1 TR/LPD	XXBXX sec-deg	
	R2 H rate	XXXX.X fps	
	R3 H	XXXXX ft	
65	Sampled LGC time		Fetched in interrupt
	R1	00XXX hr	
	R2	000XX min	
	R3	0XX.XX sec	
66			
	R1 LR slant range	XXXXX ft	
	R2 LR position	0000X	X = 1 or 2
	R3	-----	
67	LR velocities		
	R1 X	XXXXX fps	
	R2 Y	XXXXX fps	
	R3 Z	XXXXX fps	
68			
	R1 Horizontal range to landing site	XXXX.X nm	
	R2 TG	XXBXX min-sec	
	R3 VI	XXXX.X fps	
69	ΔRLS		
	R1 ΔZ (downrange in SM coordinates)	XXXXX ft	
	R2 ΔY (crossrange in SM coordinates)	XXXXX ft	
	R3 ΔX (approx alt in SM coordinates)	XXXXX ft	

CREW-MAN	PNL	PROCEDURES	REMARKS

4.4.7 NOUN LIST (Cont)

NO.	Description/Component	Scale
70	R1 AOT detent/star code (before mark)	OOCDE
	R2	-----
	R3	-----
71	R1 AOT detent/star code (after mark)	OOCDE
	R2 X marks	ZOOOX
	R3 Y marks	ZOOOY
72	RR angles	
	R1 Trunnion	XXX.XX°
	R2 Shaft	XXX.XX°
	R3	-----
73	Desired RR angles	
	R1 Trunnion	XXX.XX°
	R2 Shaft	XXX.XX°
	R3	-----
74		
	R1 TFI	XXBXX min-sec
	R2 Yaw	XXX.XX°
	R3 Pitch	XXX.XX°
75		
	R1 ΔH (CDH)	XXXX.X nm
	R2 ΔT (CDH-CSI or TPI-CDH)	XXBXX min-sec
	R3 ΔT (TPI-CDH or TPI-nom TPI)	XXBXX min-sec
76		
	R1 Desired downrange velocity	XXXX.X fps
	R2 Desired radial velocity	XXXX.X fps
	R3 Crossrange	XXXX.X nm
77	R1 TG	XXBXX min-sec
	R2 VGY(LM)	XXXX.X fps
	R3 VI	XXXX.X fps

REMARKS: R2 and R3 are modulerized to the hour; e.g. Modulo 60 minutes.

CREW-MAN	PNL	PROCEDURES	REMARKS

4.4.7 NOUN LIST (cont)

No.	Description/Component		Scale
78			
		R1 RR range	XXX.XX nm
		R2 RR range rate	XXXX.X fps
		R3 TFI	XXBXX min-sec
79			
		R1 Cursor angle	XXX.XX°
		R2 Spiral angle	XXX.XX°
		R3 Position code	0000X
80			
		R1 Data indicator	XXXXX
		R2 Ω	XXX.XX°
		R3	-----
81	ΔV (LV)		
		R1 X	XXXX.X fps
		R2 Y	XXXX.X fps
		R3 Z	XXXX.X fps
82	ΔV (LV)		
		R1 X	XXXX.X fps
		R2 Y	XXXX.X fps
		R3 Z	XXXX.X fps
83	ΔV (LM)		
		R1 X	XXXX.X fps
		R2 Y	XXXX.X fps
		R3 Z	XXXX.X fps
84	ΔV (CSM)		
		R1 X	XXXX.X fps
		R2 Y	XXXX.X fps
		R3 Z	XXXX.X fps
85	VG (LM)		
		R1 X	XXXX.X fps
		R2 Y	XXXX.X fps
		R3 Z	XXXX.X fps

CREW-MAN	PNL	PROCEDURES	REMARKS
		4.4.7 NOUN LIST (cont)	

No.	Description/Component	Scale	REMARKS
86	VG (LV)		
	R1 X	XXXX.X fps	
	R2 Y	XXXX.X fps	
	R3 Z	XXXX.X fps	
87	Backup optics LOS		
	R1 Azimuth	XXX.XX°	
	R2 Elevation	XXX.XX°	
	R3	-----	
88	Celestial body position		Celestial body unit vector
	R1 X	.XXXXX	
	R2 Y	.XXXXX	
	R3 Z	.XXXXX	
89	Landmark		
	R1 Latitude	XX.XXX°	
	R2 Longitude/2	XX.XXX°	
	R3 Altitude	XXX.XX nm	
90	Rendezvous out-of-plane parameters		
	R1 Y	XXX.XX nm	
	R2 Y rate	XXXX.X fps	
	R3 ψ	XXX.XX°	
91			
	R1 Altitude	XXXXX nmX10	
	R2 V	XXXXX fps	
	R3 Flight path angle	XXX.XX°	
92	R1 Desired auto throttle	XXXXX%	
	R2 H rate	XXXX.X fps	
	R3 H	XXXXX ft	
93	Δ gyro angles		
	R1 X	XX.XXX°	
	R2 Y	XX.XXX°	
	R3 Z	XX.XXX°	

LM 32

CREW-MAN	PNL	PROCEDURES	REMARKS
		4.4.7 NOUN LIST (cont)	

No.	Description/Component	Scale
94	R1 VGX (LM)	XXXX.X fps
	R2 H rate	XXXX.X fps
	R3 H	XXXXX ft
97	System test input	
	R1	XXXXX
	R2	XXXXX
	R3	XXXXX
98	System results and inputs	
	R1	XXXXX
	R2	.XXXXX
	R3	XXXXX
99		
	R1 RSS in position	XXXXX ft
	R2 RSS in velocity	XXXX.X fps
	R3 RSS in bias	XXXXX mrad

G & C REF DATA

CREW-MAN	PNL	PROCEDURES	REMARKS

4.4.8 STAR/PLANET LIST

Alphabetical

		Octal Code	Vis Mag
Acamar	(θ Eridani)	6	3.4
Achernar	(α Eridani)	4	0.6
Acrux	(α Crucis)	25	1.6
Aldebaran	(α Tauri)	11	1.1
Alkaid	(η Ursae Majoris)	27	1.9
Alphard	(α Hydrae)	21	2.2
Alphecca	(α Coronae Borealis)	32	2.3
Alpheratz	(α Andromedae)	1	2.1
Altair	(α Aquilae)	40	0.9
Antares	(α Scorpii)	33	1.2
Arcturus	(α Bootis)	31	0.2
Atria	(α Trianguli Australis)	34	1.9
Canopus	(α Carinae)	14	-0.9
Capella	(α Aurigae)	13	0.2
Dabih	(β Capricorni)	41	3.2
Deneb	(α Cygni)	43	1.3
Denebola	(β Leonis)	23	2.2
Diphda	(β Ceti)	2	2.2
Dnoces	(ι Ursae Majoris)	20	3.1
Enif	(ε Pegasi)	44	2.5
Fomalhaut	(α Piscis Austrini)	45	1.3
Gienah	(γ Corvi)	24	2.8
Menkar	(α Ceti)	7	2.8
Menkent	(θ Centauri)	30	2.3
Mirfak	(α Persei)	10	1.9
Navi	(γ Cassiopeiae)	3	2.2
Nunki	(σ Sagittarii)	37	2.1
Peacock	(α Pavonis)	42	2.1
Polaris	(α Ursae Minoris)	5	2.1
Procyon	(α Canis Minoris)	16	0.5
Rasalhague	(α Ophiuchi)	35	2.1
Regor	(γ Velorum)	17	1.9
Regulus	(α Leonis)	22	1.3
Rigel	(β Orionis)	12	0.3
Sirius	(α Canis Majoris)	15	-1.6
Spica	(α Virginis)	26	1.2
Vega	(α Lyrae)	36	0.1
Planet		00	
Sun		46	
Earth		47	
Moon		50	

CREW-MAN	PNL	PROCEDURES	REMARKS

4.4.8 STAR/PLANET LIST (cont)

Octal Code	Numerical		Vis Mag
1	Alpheratz	(α Andromedae)	2.1
2	Diphda	(β Ceti)	2.2
3	Navi	(γ Cassiopeiae)	2.2
4	Achernar	(α Eridani)	0.6
5	Polaris	(α Ursae Minoris)	2.1
6	Acamar	(θ Eridani)	3.4
7	Menkar	(α Ceti)	2.8
10	Mirfak	(α Persei)	1.9
11	Aldebaran	(α Tauri)	1.1
12	Rigel	(β Orionis)	0.3
13	Capella	(α Aurigae)	0.2
14	Canopus	(α Carinae)	-0.9
15	Sirius	(α Canis Majoris)	-1.6
16	Procyon	(α Canis Minoris)	0.5
17	Regor	(γ Velorum)	1.9
20	Dnoces	(ι Ursae Majoris)	3.1
21	Alphard	(α Hydrae)	2.2
22	Regulus	(α Leonis)	1.3
23	Denebola	(β Leonis)	2.2
24	Gienah	(γ Corvi)	2.8
25	Acrux	(α Crucis)	1.6
26	Spica	(α Virginis)	1.2
27	Alkaid	(η Ursae Majoris)	1.9
30	Menkent	(θ Centauri)	2.3
31	Arcturus	(α Bootis)	0.2
32	Alphecca	(α Coronae Borealis)	2.3
33	Antares	(α Scorpii)	1.2
34	Atria	(α Trianguli Australis)	1.9
35	Rasalhague	(α Ophiuchi)	2.1
36	Vega	(α Lyrae)	0.1
37	Nunki	(σ Sagittarii)	2.1
40	Altair	(α Aquilae)	0.9
41	Dabih	(β Capricorni)	3.2
42	Peacock	(α Pavonis)	2.1
43	Deneb	(α Cygni)	1.3
44	Enif	(ε Pegasi)	2.5
45	Fomalhaut	(α Piscis Austrini)	1.3
46	Sun		
47	Earth		
50	Moon		
00	Planet		

G & C REF DATA

RC 1589

CREW-MAN	PNL	PROCEDURES	REMARKS
		4.4.9 CHECKLIST REFERENCE CODES (V50 N25)	"Switch" denotes position change of a panel switch. "Perform" denotes start or end of a task. "Key in" denotes data entry through DSKY.
		R1 Display	
		00013 Key in normal or gyro torque coarse align 00014 Key in fine alignment option 00015 Perform celestial body acquisition 00016 Unprocessed Mark Sets 00062 Switch LGC power down 00201 Switch RR mode to automatic (LGC) 00203 Switch to PGNCS automatic mode 00205 Perform manual acquisition of CSM with RR 00500 Switch LR antenna to position 1	R2 contains number of unused sets GUID CONT sw - PGNS; S/C: PGNS sw - AUTO; and ENG THR CONT: THR CONT sw - AUTO
		4.4.10 OPTION CODES (V04 N06, V04 N12, or V05 N06)	Option code is displayed in R1 in conjunction with V04 N06, V04 N12, or V05 N06. Astronaut keys desired option into R2.
		R1 Display — R2 Load	
		00001 - Specify IMU orientation: 1 = Preferred; 2 = Nominal; 3 = REFSMMAT; 4 = Land site	
		00002 - Specify vehicle: 1 = LM; 2 = CSM	
		00003 - Specify tracking attitude: 1 = Preferred; 2 = Other	
		00004 - Specify radar: 1 = RR; 2 = LR	
		00005 - Specify SOR phase: 1 = First; 2 = Second	
		00006 - Specify RR coarse align option: 1 = Lock on; 2 = Continuous designation	

RC 1587, LM 3231

CREW-MAN	PNL	PROCEDURES	REMARKS
		4.4.10 OPTION CODES (V04 N06, V04 N12, or V05 N06) (cont)	
		R1 Display — R2 Load	
		00010 - Specify alignment mode: 0 = Any time; 1 = REFSMMAT and lunar-g determination; 2 = 2 bodies (star/planet); 3 = 1 body and lunar-g determination	
		00012 - Specify CSM orbit option: 1 = No orbit change; 2 = Change orbit to pass over LM	
		4.4.11 ALARM CODES (V05 N09)	
		R1, R2, R3	
			Maximum of three alarm codes may be displayed simultaneously. R1 is first alarm to occur after last reset, R2 is second alarm to occur after last reset, R3 is most recent alarm (not reset by RSET pb).
		00111 Mark missing	
		00112 Mark or mark reject not being accepted (V52, V53, V54 not flashing), or rod input and Ave-G off.	Alarms prefixed with 2 denote program goes into R00 (P00D00)
		00113 No inbits	
		00115 No marks to reject	Alarms prefixed with 3 denote software restart is generated (Bailout). M indicates main alarm. P indicates priority alarm.
		00206 Zero encode not allowed with coarse-align + gimbal lock	
		00207 ISS turn-on request not present for 90 sec	
		00210 IMU not operating	
		00211 Coarse align error	
		00212 PIPA failed, but PIPA not in use	
		00213 IMU not operating with turn-on request	
		00214 Program using IMU when IMU turned off	
		00217 Bad return from IMUSTALL	
		00220 Bad REFSMMAT	
		00401 Desired gimbal angles >X°	In-flight align, X = 60°; FINDCDUW, X = 70°.
		00402 FINDCDUW routine not controlling attitude because of inadequate pointing vectors	

CREW-MAN	PNL	PROCEDURES	REMARKS
		4.4.11 ALARM CODES (V05 N09) (cont)	
		R1, R2, R3	
		00404M Specified star not available in any detent	
		00405M Two stars not available	
		00421 W-matrix overflow	
		00501M,P Radar antenna out of limits	
		00502 Bad radar gimbal angle input	
		00503M,P Radar antenna designate fail	
		00510 Radar automatic discrete not present	
		00511 Neither or both LR antenna position discretes present for more than 10 sec (high gate, 20 sec)	
		00514M,P RR goes out of automatic mode while in use	
		00515 RR CDU fail discrete present	
		00520 RADARUPT not expected at this time	
		00522 LR position change	
		00523 LR did not achieve position 2	Alarm occurs only in V59 with average g off.
		00525M,P $\Delta\theta > 3°$	
		00526 Range >400 nm	
		00527 LOS not in mode-2 coverage on lunar surface or maneuver is required	
		00530M,P LOS not in mode 2 coverage on lunar surface after 600 sec	
		00600M Imaginary roots on first iteration	
		00601M Hp (CSI) <85 nm (earth orbit) or <35,000 ft (lunar orbit)	
		00602M Hp (CDH) <85 nm (earth orbit) or <35,000 ft (lunar orbit)	
		00603M CSI to CDH time <10 minutes	
		00604M CDH to TPI time <10 minutes or computed CDH time > input TPI time.	
		00605M Number of iterations exceeds loop maximum	
		00606M ΔV exceeds maximum	
		00611M No TIG for given elevation angle	
		00701M Illegal option code selected	
		00777 PIPA fail caused ISS warning	
		01102 LGC self-test error	
		01105 Downlink too fast	

LM 3231

CREW-MAN	PNL	PROCEDURES	REMARKS
		4.4.11 ALARM CODES (V05 N09) (cont)	
		R1, R2, R3	
		01106 Uplink too fast	
		01107 Phase table failure. Assume erasable memory destroyed	
		01301 ARCSIN-ARCCOS input angle too large	
		01406 Bad return from ROOTPSRS	
		01407 VG increasing (ΔV accumulated at 90° from desired thrust vector)	
		01410 Unintentional overflow in guidance	
		01412 Descent ignition algorithm nonconverging	
		01466 ≤TOOFEW engine throttle commands computed since last omitted throttle computation.	
		01520 V37 request not permitted at this time	
		01600 Overflow in drift test	
		01601 Bad IMU torque	
		01703 Too close to ignition, slip TIG	
		01706M Incorrect program selected for vehicle configuration	
		02001 Jet failures disabled Y-Z translation	
		02002 Jet failures disabled X-translation	
		02003 Jet failures disabled P-rotations	
		02004 Jet failures disabled U-V rotations	
		03777 ICDU failure caused ISS warning	
		04777 ICDU, PIPA failure caused ISS warning	
		07777 IMU failure caused ISS warning	
		10777 IMU, PIPA failure caused ISS warning	
		13777 IMU, ICDU failure caused ISS warning	
		14777 IMU, ICDU, PIPA failure caused ISS warning	
		20430 Acceleration overflow in integration	
		20607 No solution from time - θ or time radius	
		21103 Unused CCS branch executed	
		21204 Waitlist, variable delay, fix delay, long call, or delay job called with zero or negative Δ time.	
		21302 SQRT called with negative argument	
		21406 Bad return from ROOTPSRS during ignition algorithm	
		21501 DSKY alarm during internal use	
		31104 Delay routine busy	
		31201 Executive overflow, no VAC areas	
		31202 Executive overflow, no core sets	

G & C REF DATA

CREW-MAN	PNL	PROCEDURES	REMARKS
		4.4.11 ALARM CODES (V05 N09) (cont)	
		31203 Waitlist overflow, too many tasks	
		31206 Second job attempts to go to sleep via DSKY program.	
		31207 No VAC area for marks	
		31210 Two programs using device at same time	IMU mode switch
		31211 Illegal interrupt of extended verb	
		31502 Illegal flashing display	
		32000 DAP still in progress at next T5RUPT	
		4.4.12 AOT DETENT/LPD/COAS CODES (N70, N71)	
		R1	
		LPD/COAS calibration 000DE	
		Lf - Left front 001DE	
		F - Front 002DE	
		Rf - Right front 003DE	
		Rr - Right rear 004DE	
		CL - Close 005DE	
		Lr - Left rear 006DE	
		COAS 007DE	
		Alternative LOS definition values N87	
		COAS (overhead window)	
		R1 Azimuth 000.00°	
		R2 Elevation 090.00°	
		R3 -----	
		COAS (forward window)	Zero/zero values given are nominal. After realignment, using AOT, and possibly an alignment check, IMU Realign Program (P52) (para 4.9.1.2) can be used to calibrate COAS. (Calibration is valid until COAS is reinstalled.)
		R1 Azimuth 000.00°	
		R2 Elevation 000.00°	
		R3 -----	
		LPD	Values given do not include ground test calibration values. After realignment, using AOT, and possibly an alignment check, IMU Realign Program (P52) (para 4.9.1.2) can be used to flight-calibrate LPD.
		R1 Azimuth 000.00°	
		R2 Elevation 320.00°	
		R3 -----	

LM 3231

CREW-MAN	PNL	PROCEDURES					REMARKS	
		4.4.13 FLAGWORDS						
		Flag	Name	Register Address	Flagword	Bit	Set	Reset
		Needle 2 flag	NEED2FLG	0074	0	15	Error needles are driven with LGC DAP computed body rates.	Error needles are driven with attitude errors.
		J switch	JSWITCH	0074	0	14	Integration of W-matrix.	Integration of state vector.
		MID flag	MIDFLAG	0074	0	13	Integration with secondary body & solar perturbations. (Should remain zero in Luminary.)	Integration without solar perturbations.
		Moon flag	MOONFLAG	0074	0	12	Moon is sphere of influence.	Earth is sphere of influence.
		P21 flag	P21FLAG	0074	0	11	Use base vectors already calculated.	First pass, calculate base vectors.
		First pass flag	FSPASFLG	0074	0	10	First pass	Succeeding pass
		P25 flag	P25 FLAG	0074	0	9	P25 is operating (preferred tracking attitude)	P25 is not operating
		IMUSE flag	IMUSE	0074	0	8	IMU is in use	IMU is not in use
		Rendezvous flag	RNDVZFLG	0074	0	7	P20 or P22 is running (RR in use)	P20 or P22 is not running
		Rendezvous radar NB switch	RRNBSW	0074	0	6	RR target is in navigation-base coordinates.	RR target is in stable-member coordinates.
		Lock-on flag	LOKONSW	0074	0	5	Radar lock-on is desired	Radar lock-on is not desired
		Needle flag	NEEDLFLG	0074	0	4	Total attitude error is displayed	DAP following error is displayed

G & C REF DATA

CREW-MAN	PNL	PROCEDURES					REMARKS	
		4.4.13 FLAGWORDS (cont)						
		Flag	Name	Register Address	Flagword	Bit	Set	Reset
		Free Flag	FREEFLAG	0074	0	3	Temporary flag used for utility purposes by P51 & P52 in many routines and by lunar and solar ephemerides.	Temporary flag used for utility purposes by P51 & P52 in many routines and by lunar and solar ephemerides.
		R10 flag	R10FLAG	0074	0	2	R10 data output to ALT & ALT RATE ind and inertial lateral velocity to X-pointer ind.	R10 data output to ALT & ALT RATE ind and to forward & lateral velocity of X-pointer ind.
		P66 PRO flag	P66PROFL	0074	0	1	P66 is entered for first time (in R13) as a directive to continue P66 horizontal nulling.	Proceed on flashing V06 N60 after touchdown (specifies stop to P66 horizontal nulling).
		Number of jets flag	NJETSFLG	0075	1	15	Two-jet RCS burn	Four-jet RCS burn
		DID flag	DIDFLAG	0075	1	14	Inertial data are available	Perform data display initialization functions
		ERAD flag	ERADFLAG	0075	1	13	Compute earth radius for Fischer ellipsoid; use stored moon radius. (Never set in Luminary.)	Compute moon radius; use stored earth radius (pad radius) (latitude-longitude routines)
		ROD flag	RODFLAG	0075	1	12	Rate-of-descent mode is in process; normal operation continues.	Rate-of-descent mode (P66) is not in process or, if in process, restart occurred.
		No terrain flag	NOTERFLG	0075	1	11	Lunar terrain model computations inhibited.	Lunar terrain model computations permitted.
		R61 flag	R61FLAG	0075	1	10	Run R61.	Run R65.

RC 1588

CREW-MAN	PNL	PROCEDURES					REMARKS	
		4.4.13 FLAGWORDS (cont)						
		Flag	Name	Register Address	Flagword	Bit	Set	Reset
		Vehicle update flag	VEHUPFLG	0075	1	8	CSM state vector being updated.	LM state vector being updated.
		Update flag	UPDATFLG	0075	1	7	State vector updates from tracking allowed.	State vector updates from tracking not allowed.
		No update flag	NOUPFLAG	0075	1	6	Neither CSM nor LM state vector may be updated.	Either CSM or LM state vector may be updated.
		Track flag	TRACKFLG	0075	1	5	Tracking allowed.	Tracking not allowed.
		First time flag	FRSTIME	0075	1	4	First time thru pre-position routine.	Not first time thru pre-position routine.
		Iterate	SLOPESW	0075	1	3	Iterate with bias method in iterator.	Iterate with regula falsi method in iterator.
		Iteration value	GUESSW	0075	1	2	No starting value for iteration.	Starting value for iteration exists.
		Drift flag	DRIFTFLG	0076	2	15	T3RUPT calls gyro compensation.	T3RUPT does no gyro compensation.
		Search flag	SRCHOPTN	0076	2	14	RR in automatic search option (R24).	RR not in automatic search option.
		Acquisition mode flag	ACMODFLG	0076	2	13	Manual acquisition by RR.	Automatic acquisition by RR.
		LOS compute flag	LOSCMFLG	0076	2	12	LOS is being computed.	LOS is not being computed.
		Steering flag	STEERSW	0076	2	11	Powered flight steering is enabled (sufficient thrust is present).	Powered flight steering is off (insufficient thrust present).
		Impulse flag	IMPULSW	0076	2	9	Minimum impulse burn (cutoff time specified.)	Steering burn (no cutoff) time available.)
		External ΔV flag	XDELVFLG	0076	2	8	External ΔV VG computation.	Lambert (aimpoint) VG computation.

G & N REF DATA

CREW-MAN	PNL	PROCEDURES					REMARKS	
		4.4.13 FLAGWORDS (cont)						
		Flag	Name	Register Address	Flagword	Bit	Set	Reset
		E & TPI flag	ETPIFLAG	0076	2	7	Elevation angle supplied for P34 & P74.	TPI time supplied for P34 & P74 to compute elevation angle.
		Final flag	FINALFLG	0076	2	6	Last pass through rendezvous program computations.	Interim pass through rendezvous program computations.
		Active vehicle flag	AVFLAG	0076	2	5	LM is active vehicle.	CSM is active vehicle.
		Preferred attitude flag	PFRATFLG	0076	2	4	Preferred attitude is computed.	Preferred attitude is not computed.
		Calculate maneuver 3	CALCMAN3	0076	2	3	No final roll.	Final roll is necessary.
		Calculate maneuver 2	CALCMAN2	0076	2	2	Perform maneuver starting procedure.	Bypass starting procedure.
		Program select	NODOFLAG	0076	2	1	V37 is not permitted. (Do not allow major mode change.)	V37 is permitted. (Major mode change is enabled.)
		POO flag	POOHFLAG	0077	3	15	POO integration 10-minute checks are running.	POO integration 10-minute checks are disabled.
		Gimbal lock fail	GLOKFAIL	0077	3	14	Gimbal lock has occurred.	Gimbal lock has not occurred.
		REFSMMAT flag	REFSMFLG	0077	3	13	REFSMMAT valid (protected from fresh start).	Transformation matrix not valid.
		Lunar flag	LUNAFLAG	0077	3	12	Lunar latitude & longitude.	Earth latitude & longitude.
		NO DO P07 flag	NODOPO7	0077	3	11	V92 (P07) not allowed	V92 (P07) allowed

CREW-MAN	PNL	PROCEDURES					REMARKS	
		4.4.13 FLAGWORDS (cont)						
		Flag	Name	Register Address	Flagword	Bit	Set	Reset
		View flag	VFLAG	0077	3	10	Star pair is not in field of view	Star pair is in field of view
		R04 flag	R04FLAG	0077	3	9	R04 is running	R04 is not running
		Precision integration flag	PRECIFLG	0077	3	8	Normal integration in P00.	Engage 4-time step (P00) logic in integration.
		Occult flag	CULTFLAG	0077	3	7	Star is occulted.	Star is not occulted.
		W-matrix orbital flag	ORBWFLAG	0077	3	6	W-matrix valid for orbital navigation. (Not used in Luminary.)	W-matrix invalid for orbital navigation. (Not used in Luminary.)
		State vector flag	STATEFLG	0077	3	5	Permanent state vector updated.	Permanent state vector not updated.
		Integration type flag	INTYPFLG	0077	3	4	Conic integration.	Encke integration.
		State vector integration flag	VINTFLAG	0077	3	3	CSM state vector being integrated.	LM state vector being integrated.
		W-dimension flag	D6OR9FLG	0077	3	2	Dimension of W is 9 for integration.	Dimension of W is 6 for integration.
		W-matrix use flag	DIMOFLAG	0077	3	1	W-matrix is to be used.	W-matrix is not to be used.
		Mark display flag	MRKIDFLG	0100	4	15	Mark display in ENDIDLE.	No mark display in ENDIDLE.
		Priority display flag	PRIODFLG	0100	4	14	Priority display in ENDIDLE.	No priority display in ENDIDLE.

CREW-MAN	PNL	PROCEDURES					REMARKS	
		4.4.13 FLAGWORDS (cont)						
		Flag	Name	Register Address	Flagword	Bit	Set	Reset
		Normal display flag	NRMIDFLG	0100	4	13	Normal display in ENDIDLE.	No normal display in ENDIDLE.
		Mark display wait flag	MWAITFLG	0100	4	11	Higher priority display operating when mark display initiated.	No higher priority display operating when mark display initiated.
		Normal display wait flag	NWAITFLG	0100	4	10	Higher priority display operating when normal display initiated.	No higher priority display operating when normal display initiated.
		Mark NV flag	MRKNVFLG	0100	4	9	Astronaut using DSKY when mark display initiated.	Astronaut not using DSKY when mark display initiated.
		Normal NV flag	NRMNVFLG	0100	4	8	Astronaut using DSKY when normal display initiated.	Astronaut not using DSKY when normal display initiated.
		Priority NV flag	PRONVFLG	0100	4	7	Astronaut using DSKY when priority display initiated.	Astronaut not using DSKY when priority display initiated.
		Existing display interfered	PINBRFLG	0100	4	6	Astronaut has interfered with existing display.	Astronaut has not interfered with existing display.
		Mark display interrupt flag	MRUPTFLG	0100	4	5	Mark display interrupted by priority display.	Mark display not interrupted by priority display.
		Normal display interrupt flag	NRUPTFLG	0100	4	4	Normal display interrupted by priority or mark display.	Normal display not interrupted by priority or mark display.

CREW-MAN	PNL	PROCEDURES					REMARKS	
		4.4.13 FLAGWORDS (cont)						
		Flag	Name	Register Address	Flagword	Bit	Set	Reset
		Mark display over normal display	MKOVFLAG	0100	4	3	Mark display over normal.	Priority display over mark or normal.
		Mark display flag	XDSPFLAG	0100	4	1	Mark display not to be interrupted.	Mark display may be interrupted.
		DSKY flag	DSKYFLAG	0101	5	15	Displays sent to DSKY.	No displays sent to DSKY.
		Priority display flag	PDSPFLAG	0101	5	14	P20 set so as to turn normal display into priority display in R60.	Leave as normal display.
		U&V jets	SNUFFER	0101	5	13	U&V jets disabled during DPS burns (V65).	U&V jets enabled during DPS burns (V75).
		No throttle flag	NOTHROTL	0101	5	12	Inhibit full throttle.	Permit full throttle.
		R77 flag	R77FLAG	0101	5	11	R77 is on. Suppress all radar alarms and tracker failures.	R77 is not on.
		RR range scale flag	RNGSCFLG	0101	5	10	Scale change occurred during RR reading.	No scale change occurred during RR reading.
		Dimension flag	DMENFLG	0101	5	9	Dimension of W is 9 for incorporation.	Dimension of W is 6 for incorporation.
		Zoom flag	ZOOMFLAG	0101	5	8	Throttle up and start guidance.	Prepare for throttle up.
		Engine on flag	ENGONFLG	0101	5	7	Engine is turned on.	Engine is turned off.
		3-axis flag	3AXISFLG	0101	5	6	Maneuver specified by three axes.	Maneuver specified by one axis; R60 calls vector point.
		Yaw axis flag	AORBSFLG	0101	5	5	P-axis couples B3A, A1F and A3R, B1L RCS jets.	P-axis couples A4R, B2L and B4F, A2A RCS jets.

CREW-MAN	PNL	PROCEDURES					REMARKS	
		4.4.13 FLAGWORDS (cont)						
		Flag	Name	Register Address	Flagword	Bit	Set	Reset
		RR gimbal monitor	NORRMON	0101	5	4	Bypass RR gimbal monitor.	Perform RR gimbal monitor.
		Lambert switch	SOLNSW	0101	5	3	Lambert does not converge or time-radius nearly circular.	Lambert converges or time-radius noncircular.
		Middle gimbal local vertical flag	MGLVFLAG	0101	5	2	Local vertical coordinates computed.	Middle gimbal angle computed.
		REND W flag	RENDWFLG	0101	5	1	W-matrix valid for rendezvous navigation.	W-matrix invalid for rendezvous navigation.
		ΔV at CSI	S32.1F1	0102	6	15	ΔV at CSI T1 exceeds maximum	ΔV at CSI T1 is less than maximum.
		Newton pass	S32.1F2	0102	6	14	First pass of Newton iteration.	Reiteration.
		Newton Iteration order	S32.1F3A S32.1F3B	0102	6	13 12	Bits 13 & 12 of flagword 6 function as ordered pair in following order:	

Bit 13	Bit 12	
0 (reset)	1 (set)	= First Newton iteration being done
0	0	= First pass of second Newton iteration
1	1	= 50-fps stage of second Newton iteration
1	0	= Remainder of second Newton iteration

CREW-MAN	PNL	PROCEDURES					REMARKS	
		4.4.13 FLAGWORDS (cont)						
		Flag	Name	Register Address	Flagword	Bit	Set	Reset
		Gimbal drive switch	GMBDRVSW	0102	6	10	Gimbal trim over.	Gimbal trim not over.
		MUN FLAG	MUNFLAG	0102	6	8	Servicer calls MUNRVG.	Servicer calls CALCRVG.
		Redesignation flag	REDFLAG	0102	6	6	Landing site redesignation permitted.	Landing site redesignation not permitted.
		ΔV overwrite at TPI or TPM	NTARGFLG	0102	6	3	Astronaut did overwrite ΔV at TPI or TPM (P34, P35, P74, P75).	Astronaut did not overwrite ΔV at TPI or TPM.
		AUX flag	AUXFLAG	0102	6	2	If IDLEFLAG is not set, servicer will exercise DVMON on next pass.	Servicer will skip DVMON on its next pass even if IDLEFLAG is not set. It will then set AUXFLAG.
		Attitude flag	ATTFLAG	0102	6	1	LM attitude exists in moon-fixed coordinates.	No LM attitude exists in moon-fixed coordinates.
		TPI time	ITSWICH	0103	7	15	TPI time to be computed (P34 and P74).	TPI time has been computed.
		Maneuver flag	MANUFLAG	0103	7	14	Attitude maneuver during RR search. (Not used in Luminary.)	No attitude maneuver during RR search. (Not used in Luminary.)
		Ignition flag	IGNFLAG	0103	7	13	TIG has arrived.	TIG has not arrived.

CREW-MAN	PNL	PROCEDURES					REMARKS	
		4.4.13 FLAGWORDS (cont)						
		Flag	Name	Register Address	Flagword	Bit	Set	Reset
		Astronaut flag	ASTNFLAG	0103	7	12	Astronaut has OK'd ignition.	Astronaut has not OK'd ignition.
		Analog displays	SWANDISP	0103	7	11	Landing analog displays enabled.	Landing analog displays suppressed.
		Normal switch	NORMSW	0103	7	10	Unit normal input to Lambert.	Lambert computes its own unit normal.
		Compute state vector	RVSW	0103	7	9	Do not compute final state vector in time θ	Compute final state vector in time θ
		V67 flag	V67FLAG	0103	7	8	Astronaut overwrites W-matrix initial values.	Astronaut does not overwrite W-matrix initial values.
		ΔV Monitor flag	IDLEFLAG	0103	7	7	No ΔV monitor.	Connect ΔV monitor.
		V37 flag	V37FLAG	0103	7	6	Average g (servicer) running.	Average g (servicer) off.
		Average g flag	AVEGFLAG	0103	7	5	Average g (servicer) desired.	Average g (servicer) not desired.
		Uplink flag	UPLOCK FL	0103	7	4	$K\bar{K}K$ fail	No $K\bar{K}K$ fail
		VERI FLAG	VERIFLAG	0103	7	3	Inverted by V33 at end of P27.	
		Orbit parameter flag	V82EMFLG	0103	7	2	Moon vicinity	Earth vicinity
		TFF switch	TFFSW	0103	7	1	Calculate T-perigee.	Calculate TFF.
		RPQ flag	RPQFLAG	0104	8	15	RPQ not computed (RPQ = vector between secondary body and primary body)	RPQ computed

CREW-MAN	PNL	PROCEDURES					REMARKS	
		4.4.13 FLAGWORDS (cont)						
		Flag	Name	Register Address	Flagword	Bit	Set	Reset
		Integration flag	NEWIFLG	0104	8	13	First pass through integration	Succeeding iteration of integration
		CSM moon flag	CMOONFLG	0104	8	12	Permanent CSM state vector in lunar sphere (protected from fresh start)	Permanent CSM state vector in earth sphere (protected from fresh start)
		LM moon flag	LMOONFLG	0104	8	11	Permanent LM state vector in lunar sphere (protected from fresh start)	Permanent LM state vector in earth sphere (protected from fresh start)
		Guidance display flag	FLUNDISP	0104	8	10	Current guidance displays inhibited	Current guidance displays permitted
		Surface flag	SURFFLAG	0104	8	8	LM on moon (protected from fresh start)	LM not on moon (protected from fresh start)
		Infinity flag	INFINFLG	0104	8	7	No conic solution (closure through infinity required)	Conic solution exists
		Order switch	ORDERSW	0104	8	6	Integrator uses second-order minimum mode (not set in Luminary)	Integrator uses first-order standard mode (not set in Luminary)
		Apocenter-pericenter range select switch	APSESW	0104	8	5	Range desired outside pericenter-apocenter range in time-radius	Range desired inside pericenter-apocenter range in time-radius
		COGA flag	COGAFLAG	0104	8	4	No conic solution; too close to rectilinear (COGA overflows)	Conic solution exists (COGA does not overflow)
		Initial align flag	INITALGN	0104	8	2	Initial pass through P57	Second pass through P57
		360° switch	360SW	0104	8	1	Transfer angle near 360°	Transfer angle not near 360°

RC 1588

CREW-MAN	PNL	PROCEDURES					REMARKS	
		4.4.13 FLAGWORDS (cont)						
		Flag	Name	Register Address	Flagword	Bit	Set	Reset
		Vertical rise flag	FLVR	0105	9	14	Vertical rise (ascent guidance)	Nonvertical rise (ascent guidance)
		P70/P71 flag	P7071FLG	0105	9	13	Near beginning of P70 or P71	Not near beginning of P70 or P71 (Pad loaded)
		Position control	FLPC	0105	9	12	No position control (ascent guidance)	Position control (ascent guidance)
		Preignition	FLPI	0105	9	11	Preignition phase (ascent guidance)	Regular guidance
		RCS	FLRCS	0105	9	10	RCS injection mode (ascent guidance)	Main engine mode
		Abort enable flag	LETABORT	0105	9	9	Abort programs enabled	Abort programs not enabled
		APS abort continuation flag	FLAP	0105	9	8	APS continues abort after DPS staging (ascent guidance).	APS abort is not continuation.
		Abort targeting flag	ABTTGFLG	0105	9	7	J2 and K2 parameters will be used during P70 and P71. (For H-2 type CSM DOI missions, J2 and K2 are used when rendezvous does not require an extra revolution.)	J1 and K1 parameters will be used during P70 and P71. (For H-2 type CSM DOI missions, J1 and K1 are used when rendezvous requires an extra revolution.)
		Rotation flag	ROTFLAG	0105	9	6	P70 & P71 will force rotation in preferred direction	P70 & P71 will not force rotation in preferred direction
		Quit flag	QUITFLAG	0105	9	5	Discontinue integration.	Continue integration.
		Flight 59 flag	FLT59FLG	0105	9	4	Lunar surface mark procedure used during inflight alignment	Normal marking to be used during inflight alignment
		Integrate time flag	MID1FLAG	0105	9	3	Integrate to TDEC.	Integrate to the then present time.
		MID to AV integration	MIDAVFLG	0105	9	2	Integration entered from one of MID to AV portals.	Integration was not entered via MID to AV.

RC 1588, LM 3231

CREW-MAN	PNL	PROCEDURES					REMARKS	
		4.4.13 FLAGWORDS (cont)						
		Flag	Name	Register Address	Flagword	Bit	Set	Reset
		AVE to MID W-matrix integration	AVEMIDSW	0105	9	1	AVE to MID calling for W-matrix integration. Do not write over RN, VN, or PIPTIME.	No AVE to MID W-matrix integration. Allow setup of RN, VN, and PIPTIME.
		Integration flag	INTFLAG	0106	10	14	Integration in process	Integration not in process
		Ascent/descent stage flag	APSFLAG	0106	10	13	Ascent stage (protected from fresh start)	Descent stage (protected from fresh start)
		Restart integration flag	REINTFLG	0106	10	7	Integration routine to be restarted	Integration routine not to be restarted
		Control flag	CONTRLFL	0106	10	2	DAP in control	DAP not in control
		Not PGNCS flag	NPGNCSFL	0106	10	1	Last active DAP pass done with an AGS indication	Last active DAP pass done with PGNCS indication
		LR bypass	LRBYPASS	0107	11	15	Bypass all LR updates	Do not bypass LR updates
		Velocity fail test flag	VFAILFLG	0107	11	14	When corresponding radar reading has failed velocity LR data reasonability test.	When corresponding radar reading has passed velocity LR data reasonability test.
		Altitude fail test flag	HFAILFLG	0107	11	13	When corresponding radar reading has failed altitude LR data reasonability test.	When corresponding radar reading has passed altitude LR data reasonability test.
		VX inhibit flag	VXINH	0107	11	12	If Z-velocity data unreasonable, bypass X-velocity update on next pass.	Update X-axis velocity.

RC 1588, LM 3231

CREW-MAN	PNL	PROCEDURES					REMARKS	
		4.4.13 FLAGWORDS (cont)						
		Flag	Name	Register Address	Flagword	Bit	Set	Reset
		Past high gate	PSTHIGAT	0107	11	11	Past high gate	Pre high gate
		No LR read	NOLRREAD	0107	11	10	LR repositioning; bypass update.	LR not repositioning
		X-axis override inhibit flag	XORFLG	0107	11	9	Below limit; inhibit X-axis override.	Above limit; do not inhibit X-axis override.

CREW-MAN	PNL	PROCEDURES					REMARKS	
		4.4.13 FLAGWORDS (cont)						
		Flag	Name	Register Address	Flagword	Bit	Set	Reset
		LR permit flag	LRINH	0107	11	8	Permits LR data incorporation into state vector.	Inhibits LR data incorporation into state vector.
		LR velocity data	VELDATA	0107	11	7	LR velocity measurement made	LR velocity measurement not made
		LR altitude data	RNGEDATA	0107	11	4	LR altitude measurement made	LR altitude measurement not made
		R12 read flag	R12RDFLG	0107	11	3	LR not being read. (Complete set of five velocity data readings for particular velocity beam are available.)	LR being read. (Complete set of five velocity data readings for particular velocity beam are not available.)
		LR velocity fail lamp flash flag	VFLSHFLG	0107	11	2	LR velocity fail; VEL lt should be flashing	LR velocity has not failed; VEL lt should not flash
		LR altitude fail lamp flash flag	HFLSHFLG	0107	11	1	LR altitude fail; ALT lt should be flashing	LR altitude has not failed; ALT lt should not flash
		RADMODES = Flagword 12						
		Continuous designate flag	CDESFLAG	0110	12	15	LGC commands RR without lock-on	LGC checks for lock-on
		Remode flag	REMODFLG	0110	12	14	Change in antenna mode was requested or is in process (remode)	Remode was not requested or is not in process.
		RR CDU zero flag	RCDUOFLG	0110	12	13	RR CDU's are being zeroed.	RR CDU's are not being zeroed.
		RR antenna mode flag	ANTENFLG	0110	12	12	RR antenna in mode 2	RR antenna in mode 1

RC 1588, LM 3231

CREW-MAN	PNL	PROCEDURES					REMARKS	
		4.4.13 FLAGWORDS (cont)						
		Flag	Name	Register Address	Flagword	Bit	Set	Reset
		Reposition flag	REPOSMON	0110	12	11	RR reposition in process	No RR reposition in process
		RR designate flag	DESIGFLG	0110	12	10	RR designate was requested or is in process	RR designate was not requested & is not in process
		LR altitude scale	ALTSCALE	0110	12	9	LR altitude reading is on high scale	LR altitude reading is on low scale
		LR velocity data fail flag	LRVELFLG	0110	12	8	LR velocity data fail	No LR velocity data fail
		No RR CDU fail flag	RCDUFAIL	0110	12	7	No RR CDU fail	RR CDU fail
		LR position flag	LRPOSFLG	0110	12	6	LR position 2 is desired	LR position 1 is desired
		LR altitude data fail flag	LRALTFLG	0110	12	5	LR altitude data fail; cannot be read successfully	No LR altitude data fail
		RR data fail flag	RRDATAFL	0110	12	4	RR data fail; cannot be read successfully	No RR data fail
		RR range scale flag	RRRSFLAG	0110	12	3	RR range reading on high scale	RR range reading on low scale
		RR automatic mode	AUTOMODE	0110	12	2	RR not in auto mode. Automatic mode discrete is not present.	RR in auto mode
		RR turn-on flag	TURNONFL	0110	12	1	RR turn-on sequence in process.	No RR turn-on sequence in process.
					DAPBOOLS = Flagword 13			
		Minimum impulse flag	PULSEFLG	0111	13	15	Minimum impulse command mode in attitude hold (V76)	Not in minimum impulse command mode (V77)

G & C REF DATA

RC 1588

CREW-MAN	PNL	PROCEDURES					REMARKS	
		4.4.13 FLAGWORDS (cont)						
		Flag	Name	Register Address	Flagword	Bit	Set	Reset
		Gimbal flag	USEQRFLG	0111	13	14	Gimbal unusable; use RCS jets only.	Trim gimbal can be used
		CSM docked flag	CSMDKFLG	0111	13	13	CSM docked to LM; use backup DAP.	CSM not docked to LM
		Current rate command flag	OURRCFLG	0111	13	12	Current DAP pass is rate command.	Current DAP pass is not rate command.
		4/2-jet X-axis translation flag	ACC4-2FL	0111	13	11	4-jet X-axis translation requested	2-jet X-axis translation requested
		A/B system translation flag	AORBTFLG	0111	13	10	Use RCS system B for X-translation.	Use RCS system A for X-translation (preferred).
		X-axis override flag	XOVINFLG	0111	13	9	X-axis override is locked out.	X-axis override is permitted.
		Drift flight	DRIFTDFL	0111	13	8	Assume zero offset; drifting flight	Use offset acceleration estimate.
		ACA scale flag	RHCSCFLG	0111	13	7	Normal ACA scaling requested	Fine ACA scaling requested
		Ullage flag	ULLAGFLG	0111	13	6	Ullage requested by program	No internal ullage request
		Deadband select 2 flag	DBSL2FLG	0111	13	5	Bits 5 and 4 of DAPBOOLS (flagword 13) are used together to indicate astronaut-selected deadband limits as follows:	
		Deadband select flag	DBSELFLG	0111	13	4		

Bit 5	Bit 4	DAP Deadband
0 (reset)	0 (reset)	± 0.3°
0	1	± 1.0°
1	0	± 5.0°
1	1	± 5.0°

RC 1_ , RC 1588, LM 3231

CREW-MAN	PNL	PROCEDURES	REMARKS

4.4.13 FLAGWORDS (cont)

Flag	Name	Register Address	Flagword	Bit	Set	Reset
Accelera-tions OK flag	ACCOKFLG	0111	13	3	Computed accelerations are probably correct.	Computed accelerations are probably incorrect.
Automatic rate 2 flag	AUTR2FLG	0111	13	2	Bits 2 & 1 of DAPBOOLS (flagword 13) are used together to indicate astronaut-selected KALCMANU maneuver rates, as follows:	
Automatic rate 1 flag	AUTR1FLG	0111	13	1		

Bit 2	Bit 1	
0 (reset)	0 (reset)	= 0.2°/sec
0	1	= 0.5°/sec
1	0	= 2.0°/sec
1	1	= 10.0°/sec

4.4.14 AGS SELECTOR LOGIC

Address	Entry		
400	+00000	Attitude hold	Submodes of operation
400	+10000	Guidance steering	
400	+20000	Z-body-axis steering	
400	+30000	PGNCS-to-AGS align	Ref para 4.9.2.1
400	+40000	Lunar align	Ref para 4.9.3.2
400	+50000	Body-axis align	Ref para 4.9.2.2, 4.9.2.3
400	+60000	Gyro and accelerometer calibration	Ref para 4.6.2.5
400	+70000	Accelerometer only calibration	In-flight only. Ref para 4.6.2.14
410	+00000	Orbit insertion	Guidance routines. Ref para 4.7.3.1
410	+10000	Coelliptic sequence initiation	Ref para 4.7.1.2
410	+20000	Constant Δh	Ref para 4.7.1.3
410	+30000	Terminal phase initiate search	Ref para 4.7.1.4
410	+40000	Terminal phase initiate execute	Ref para 4.7.1.4
410	+50000	External ΔV	Ref para 4.7.1.1
411	+00000	Do not perform automatic radar updating from PGNS downlink	
411	+10000	Select automatic radar updating from PGNS downlink	

G & C REF DATA

CREW-MAN	PNL	PROCEDURES			REMARKS
		4.4.14 AGS SELECTOR LOGIC (cont)			
		Address	Entry		
		412	+00000	Reinitiate in-flight AGS self-test	Ref para 4.6.2.3. Self-test readouts: +00000 - Test not completed +10000 - Test successfully completed +30000 - Logic test failure +40000 - Memory test failure +70000 - Logic and memory test failure
		413	+10000	Any entry into 413 (+10000 is suggested) will store lunar azimuth and set lunar surface flag.	
		414	+00000	Navigation initialization complete	Readout only. A +00000 entry is treated as a +10000 entry.
		414	+10000	LM and CSM navigation initialization via PGNCS downlink	Ref para 4.6.1.18
		414	+20000	LM navigation initialization via DEDA	Ref para 4.6.2.7
		414	+30000	CSM navigation initialization via DEDA	Ref para 4.6.2.9
		415		Any entry in this cell causes Z-body axis direction cosines, last computed range, and range rate to be stored in appropriate cells for use in radar filter	A +10000 entry is suggested.
		416	+10000	Compute CSI maneuver with CDH maneuver occurring at 0.5 orbital period following CSI	
		416	+30000	Compute CSI maneuver with CDH maneuver occurring at 1.5 orbital periods following CSI	
		417	+00000	Normal value of radar initialization command	
		417	+10000	Initialize radar filter	Reset automatically to +00000 after initialization
		507	+00000	Orient Z-body-axis to direction of CSM (Z-body-axis steering commanded)	

RC 1582

CREW-MAN	PNL	PROCEDURES	REMARKS

4.4.14 AGS SELECTOR LOGIC (cont)

Address	Entry	
623	+00000	Orient Z-body-axis parallel to CSM orbit plane (guidance steering commanded)
623	+10000	Orient Z-body-axis parallel to plane defined by Wb vector (guidance steering commanded)

4.4.15 DEDA INPUT LIST

0 = not available
1 = available

Symbol	Address	Quantization Lunar	Quantization Earth		OI	CSI	CDH	TPI	XDV
Sin δL	047	Octal		Sine of landing azimuth angle	1	1	1	1	1
Cosin δL	053	Octal		Cosine of landing azimuth angle	1	1	1	1	1
25J	223	100 ft	1000 ft	DEDA altitude update during descent	1	1	1	1	1
7J	224	100 ft	1000 ft	Term in semi major axis computation, δL (OI)	1	1	1	1	1
8J	225	100 ft	1000 ft	One-half lower limit on apolune radius	1	1	1	1	1
10J	226	100 ft	1000 ft	Retarget value for 7J when central angle exceeds 12J (OI)	1	1	1	1	1
5J	231	100 ft	1000 ft	Radial distance of landing site from center of attracting body	1	1	1	1	1
16J	232	100 ft	1000 ft	Targeted injection altitude at orbit insertion	1	1	1	1	1
21J	233	100 ft	1000 ft	Vertical pitch steering altitude threshold	1	1	1	1	1
1J1	240	100 ft	1000 ft	X-component of LM position used in LM initialization	1	1	1	1	1
1J2	241	100 ft	1000 ft	Y-component of LM position used in LM initialization	1	1	1	1	1
1J3	242	100 ft	1000 ft	Z-component of LM position used in LM initialization	1	1	1	1	1
2J1	244	100 ft	1000 ft	X-component of CSM position used in CSM initialization	1	1	1	1	1
2J2	245	100 ft	1000 ft	Y-component of CSM position used in CSM initialization	1	1	1	1	1
2J3	246	100 ft	1000 ft	Z-component of CSM position used in CSM initialization	1	1	1	1	1

G & C REF DATA

RC 1582

CREW-MAN	PNL	PROCEDURES	REMARKS

4.4.15 DEDA INPUT LIST (cont)

0 = not available
1 = available

Symbol	Address	Quantization Lunar	Quantization Earth		OI	CSI	CDH	TPI	XDV
1J7	254	0.1 min		Epoch time of LM ephemeris data used in LM navigation initialization. This time must be expressed in AGS computer time	1	1	1	1	1
1J4	260	0.1 fps	1 fps	X-component of LM velocity used in LM initialization	1	1	1	1	1
1J5	261	0.1 fps	1 fps	Y-component of LM velocity used in LM initialization	1	1	1	1	1
1J6	262	0.1 fps	1 fps	Z-component of LM velocity used in LM initialization	1	1	1	1	1
2J4	264	0.1 fps	1 fps	X-component of CSM velocity used in CSM initialization	1	1	1	1	1
2J5	265	0.1 fps	1 fps	Y-component of CSM velocity used in CSM initialization	1	1	1	1	1
2J6	266	0.1 fps	1 fps	Z-component of CSM velocity used in CSM initialization	1	1	1	1	1
2J7	272	0.1 min		Epoch time of CSM ephemeris data used in CSM navigation initialization. This time must be expressed in AGS computer time.	1	1	1	1	1
29J	274	0.1 min		Initial radar filter value for t1	1	1	1	1	1
1J	275	0.1 min		Desired TPI maneuver time for CSI computation	1	1	1	1	1
12J	305	0.01°		Phase angle limit for orbit insertion retargeting	1	1	1	1	1
4J	306	0.01 min		Time increment of node prior to nominal rendezvous	0	0	0	1	0
6J	307	0.01 min		Transfer time from beginning of direct transfer maneuver to rendezvous	1	1	1	1	1
TΔ	310	0.01 min		Time increment from present time to next maneuver	0	1	1	1	1
3J	312	0.01 min		TPI rendezvous offset time, as used in stable orbit rendezvous technique	1	1	1	1	1
18J	316	0.01 nm		Radar range	1	1	1	1	1
tig	373	0.1 min		Absolute time of next maneuver. Designations of tigA, tigB, and tigC (absolute times of CSI, CDH, and TPI maneuvers, respectively) are retained for procedural clarity.	1	1	1	1	1

RC 1582

CREW-MAN	PNL	PROCEDURES	REMARKS

4.4.15 DEDA INPUT LIST (cont)

0 = not available
1 = available

Symbol	Address	Quantization Lunar	Quantization Earth		OI	CSI	CDH	TPI	XDV
TA1	377	0.1 min		AGS computer time	1	1	1	1	1
Vdx	404	N/A		Accumulated ΔV in X-body-axis direction minus descent engine capability (updated every 0.040 sec)	1	1	1	1	1
28J1	450	0.1 fps	1 fps	Component of external ΔV input in direction parallel to CSM orbit plane. (Positive value indicates velocity to be added in posigrade direction.)	0	1	1	0	1
28J2	451	0.1 fps	1 fps	Component of external ΔV input in direction perpendicular to CSM orbit plane (positive value indicates velocity to be added opposite to LM angular momentum vector)	0	1	1	0	1
28J3	452	0.1 fps	1 fps	Component of external ΔV input in radial direction (positive value indicates velocity to be added toward attracting body)	0	1	1	0	1
22J	464	0.1 fps	1 fps	Vertical pitch steering altitude rate threshold	1	1	1	1	1
23J	465	0.1 fps	1 fps	Target radial rate at orbit insertion	1	1	1	1	1
17J	503	0.1 fps	1 fps	Radar range rate	1	1	1	1	1
Wbx	514	Octal		Guidance steering unit vector (X)	1	1	1	1	1
Wby	515	Octal		Guidance steering unit vector (Y)	1	1	1	1	1
Wbz	516	Octal		Guidance steering unit vector (Z)	1	1	1	1	1
1K18	534	Octal		X-accelerometer scale factor	1	1	1	1	1
1K20	535	Octal		Y-accelerometer scale factor	1	1	1	1	1
1K22	536	Octal		Z-accelerometer scale factor	1	1	1	1	1
1K19	540	0.001/0.01 fps sq		X-axis accelerometer bias compensation	1	1	1	1	1
1K21	541	0.001/0.01 fps sq		Y-axis accelerometer bias compensation	1	1	1	1	1
1K23	542	0.001/0.01 fps sq		Z-axis accelerometer bias compensation	1	1	1	1	1
1K1	544	0.01°/hr		X-gyro drift compensation constant	1	1	1	1	1
1K6	545	0.01°/hr		Y-gyro drift compensation constant	1	1	1	1	1
1K11	546	0.01°/hr		Z-gyro drift compensation constant	1	1	1	1	1
Δδ	547	Octal		Lunar align azimuth correction	1	1	1	1	1
2J	605	Octal		Desired cotangent of LOS angle between LM and CSM at desired TPI time used in CSI computation	1	1	1	1	1

G & C REF DATA

RC 1583

CREW-MAN	PNL	PROCEDURES	REMARKS

4.4.15 DEDA INPUT LIST (cont)

0 = not available
1 = available

Symbol	Address	Quantization Lunar	Quantization Earth		OI	CSI	CDH	TPI	XDV
K55	607	Octal		h rate display scale factor	1	1	1	1	1
3K4	613	Octal		Sine of TPI interdict region	1	1	1	1	1
6J1	640	Octal		Negative of X inertial component of lunar rotation rate vector	1	1	1	1	1
6J2	641	Octal		Negative of Y inertial component of lunar rotation rate vector	1	1	1	1	1
6J3	642	Octal		Negative of Z inertial component of lunar rotation rate vector	1	1	1	1	1
4K10	662	Octal		Constant in linear expression for αL (OI)	1	1	1	1	1
11J	673	Octal		Retarget values for 4K10 when central angle exceeds 12J (OI)	1	1	1	1	1

4.4.16 DEDA OUTPUT LIST

0 = not available
1 = available

Symbol	Address	Quantization Lunar	Quantization Earth		OI	CSI	CDH	TPI	XDV
y	211	100 ft	1000 ft	Present LM out-of-plane distance	1	1	1	1	1
Vpy	263	0.1 fps	1 fps	Predicted out-of-CSM-plane velocity at tig in CSI, CDH, or TPI; present LM out-of-plane velocity in OI	1	1	1	1	1
Vyo	270	0.1 fps	1 fps	Present LM out-of-CSM-plane velocity	1	1	1	1	1
1J	275	0.1 min		Nominal time of TPI maneuver	1	1	1	1	1
ξ	277	0.01°		In-plane angle between Z-body-axis and local horizontal	1	1	1	1	1
θ LOS	303	0.01°		Predicted LOS angle at TPI	0	0	0	1	0
θ f	303	0.01°		LM to CSM phase angle: valid for tig of CSI or CDH, present time in OI	0	1	1	0	0
4J	306	0.01 min		Time of node prior to nominal rendezvous time	0	0	0	1	0
6J	307	0.01 min		Time from TPI to rendezvous	1	1	1	1	1
TΔ	310	0.01 min		Time from present to next maneuver	0	1	1	1	1
Tr	311	0.01 min		Time to go until rendezvous in TPI	0	0	0	1	0

RC 1583

CREW-MAN	PNL	PROCEDURES	REMARKS

4.4.16 DEDA OUTPUT LIST (cont)

0 = not available
1 = available

Symbol	Address	Quantization Lunar	Quantization Earth		OI	CSI	CDH	TPI	XDV
3J	312	0.01 min		Target offset time	1	1	1	1	1
δr	314	0.1 nm		Differential orbital altitude along LM radial at CSI time	0	1	1	0	0
qa	315	0.1 nm		Apofocus altitude of LM trajectory	1	1	1	1	1
RR	317	0.01 nm	0.1 nm	Computed range from LM to CSM	1	1	1	1	1
h	337	0.1 nm		LM altitude	1	1	1	1	1
rx	340	100 ft	1000 ft	X-component of LM position	1	1	1	1	1
ry	341	100 ft	1000 ft	Y-component of LM position	1	1	1	1	1
rz	342	100 ft	1000 ft	Z-component of LM position	1	1	1	1	1
rcx	344	100 ft	1000 ft	X-component of CSM position	1	1	1	1	1
rcy	345	100 ft	1000 ft	Y-component of CSM position	1	1	1	1	1
rcz	346	100 ft	1000 ft	Z-component of CSM position	1	1	1	1	1
rf	347	100 ft	1000 ft	Predicted LM orbit radial distance at tig (at burnout in OI)	1	1	1	1	1
Vx	360	0.1 fps	1 fps	X-component of LM velocity	1	1	1	1	1
Vy	361	0.1 fps	1 fps	Y-component of LM velocity	1	1	1	1	1
Vz	362	0.1 fps	1 fps	Z-component of LM velocity	1	1	1	1	1
Vcx	364	0.1 fps	1 fps	X-component of CSM velocity	1	1	1	1	1
Vcy	365	0.1 fps	1 fps	Y-component of CSM velocity	1	1	1	1	1
Vcz	366	0.1 fps	1 fps	Z-component of CSM velocity	1	1	1	1	1
$\dot{r}$	367	0.1 fps	1 fps	LM altitude rate	1	1	1	1	1
VG	370	0.1 fps	1 fps	Magnitude of velocity to be gained	1	1	1	1	1
VF	371	0.1 fps	1 fps	Braking velocity required to rendezvous (TP1 mode only)	0	0	0	1	0
TA0	372	0.1 min		Coast time from CSI to CDH	0	1	0	0	0
tig	373	0.1 min		Absolute time of next maneuver. Designations tigA, tigB, and tigC (absolute times of CSI, CDH, and TPI maneuvers, respectively) are retained for procedural clarity.	1	1	1	1	1
TA1	377	0.1 min		AGS computer time	1	1	1	1	1
Δr	402	0.1 nm		Predicted differential altitude after CDH	0	1	1	0	0
q1D	402	0.1 nm		Perifocus altitude of predicted LM trajectory	0	0	0	1	0
qLT	403	0.1 nm		Perifocus altitude of LM trajectory	1	1	1	1	1
$\dot{r}f$	423	0.1 fps	1 fps	Desired final value of altitude rate	1	1	1	1	0

G & C REF DATA

RC 1583

CREW-MAN	PNL	PROCEDURES	REMARKS

4.4.16 DEDA OUTPUT LIST (cont)

0 = not available
1 = available

Symbol	Address	Quantization Lunar	Quantization Earth		OI	CSI	CDH	TPI	XDV
V	433	0.1 fps	1 fps	Magnitude of LM velocity	1	1	1	1	1
$\dot{R}$	440	0.1 fps	1 fps	Range rate between LM and CSM (negative value indicates LM closing on CSM)	1	1	1	1	1
VDX	470	0.1 fps	1 fps	Accumulated total sensed velocity increment in X-body direction	1	1	1	1	1
VDY	471	0.1 fps	1 fps	Accumulated total sensed velocity increment in Y-body direction	1	1	1	1	1
VDZ	472	0.1 fps	1 fps	Accumulated total sensed velocity increment in Z-body direction	1	1	1	1	1
$\dot{t}A$	477	0.1 fps	1 fps	Radial velocity at tig (at present in OI)	1	1	1	1	1
ΔVgx	500	0.1 fps	1 fps	Velocity to be gained in X-body-axis direction	1	1	1	1	1
ΔVgy	501	0.1 fps	1 fps	Velocity to be gained in Y-body-axis direction	1	1	1	1	1
ΔVgz	502	0.1 fps	1 fps	Velocity to be gained in Z-body-axis direction	1	1	1	1	1
1K18	534	Octal		X-accelerometer scale factor (fps/pulse)	1	1	1	1	1
1K20	535	Octal		Y-accelerometer scale factor (fps/pulse)	1	1	1	1	1
1K22	536	Octal		Z-accelerometer scale factor (fps/pulse)	1	1	1	1	1
1K19	540	0.001 fps sq 0.01 fps sq		X-accelerometer bias compensation	1	1	1	1	1
1K21	541	0.001 fps sq 0.01 fps sq		Y-accelerometer bias compensation	1	1	1	1	1
1K23	542	0.001 fps sq 0.01 fps sq		Z-accelerometer bias compensation	1	1	1	1	1
1K1	544	0.01°/hr		X-gyro drift compensation coefficient	1	1	1	1	1
1K6	545	0.01°/hr		Y-gyro drift compensation coefficient	1	1	1	1	1
1K11	546	0.01°/hr		Z-gyro drift compensation coefficient	1	1	1	1	1
δ2	574	N/A		Descent section staging flag	1	1	1	1	1
δ21	604	N/A		Lunar surface flag	1	1	1	1	1
μ6	612	Octal		Staging sequence counter	1	1	1	1	1
μ8	614	1 count		Ullage counter	1	1	1	1	1
1K9	616	1 count		Ullage counter value for ullage completion	1	1	1	1	1
μ19	621	Split integer		Radar update counter displays	1	1	1	1	1

RC 1584

CREW-MAN	PNL	PROCEDURES	REMARKS

4.4.17 DEDA ACCESSIBLE PARAMETERS LIST

0 = not available
1 = available

Symbol	Address	Quantization Lunar	Quantization Earth		OI	CSI	CDH	TPI	XDV
C2	033		Octal	Rendezvous angle sine	0	0	0	1	0
V1X	034		Octal	In-plane horizontal unit vector at tig for CSI, CDH, and TPI; at present for OI & XDV (X)	1	1	1	1	1
V1Y	035		Octal	In-plane horizontal unit vector at tig for CSI, CDH, and TPI; at present for OI & XDV (Y)	1	1	1	1	1
V1Z	036		Octal	In-plane horizontal unit vector at tig for CSI, CDH, and TPI; at present for OI & XDV (Z)	1	1	1	1	1
W1X	040		Octal	LM out-of-plane unit vector at tig for TPI; present for OI, CSI, CDH, & XDV (X)	1	1	1	1	1
W1Y	041		Octal	LM out-of-plane unit vector at tig for TPI; present for OI, CSI, CDH, & XDV (Y)	1	1	1	1	1
W1Z	042		Octal	LM out-of-plane unit vector at tig for TPI; present for OI, CSI, CDH, & XDV (Z)	1	1	1	1	1
A31S	044		Octal	Radar null direction cosine	1	1	1	1	1
A32S	045		Octal	Radar null direction cosine	1	1	1	1	1
A33S	046		Octal	Radar null direction cosine	1	1	1	1	1
Sin δL	047		Octal	Sine of azimuth angle	1	1	1	1	1
Cosin δL	053		Octal	Cosine of azimuth angle	1	1	1	1	1
Wcx	054		Octal	Out-of-CSM orbit plane direction (X)	1	1	1	1	1
Wcy	055		Octal	Out-of-CSM orbit plane direction (Y)	1	1	1	1	1
Wcz	056		Octal	Out-of-CSM orbit plane direction (Z)	1	1	1	1	1
U1X	060		Octal	Normal LM position vector at tig for CSI, CDH & TPI, present for OI & XDV (X)	1	1	1	1	1
U1Y	061		Octal	Normal LM position vector at tig for CSI, CDH, & TPI; present for OI & XDV (Y)	1	1	1	1	1
U1Z	062		Octal	Normal LM position vector at tig for CSI, CDH, & TPI; present for OI & XDV (Z)	1	1	1	1	1
AT	067		Octal	Thrust acceleration (fps sq)	1	1	1	1	1
Drx	104		Octal	LM position remainder (ft) (X)	1	1	1	1	1

G & C REF DATA

RC 1584

CREW-MAN	PNL	PROCEDURES	REMARKS

4.4.17 DEDA ACCESSIBLE PARAMETERS LIST (cont)

0 = not available
1 = available

Symbol	Address	Quantization Lunar	Quantization Earth		OI	CSI	CDH	TPI	XDV
Dry	105		Octal	LM position remainder (ft) (Y)	1	1	1	1	1
Drz	106		Octal	LM position remainder (ft) (Z)	1	1	1	1	1
θP	107		Octal	PGNCS θ (pulses)	1	1	1	1	1
DIGX	110		Octal	Predicted change in integrated gravity (fps) (X)	1	1	1	1	1
DIGY	111		Octal	Predicted change in integrated gravity (fps) (Y)	1	1	1	1	1
DIGZ	112		Octal	Predicted change in integrated gravity (fps) (Z)	1	1	1	1	1
ψP	113		Octal	PGNCS ψ (pulses)	1	1	1	1	1
GXDT	114		Octal	Gravity times major cycle time (fps) (X)	1	1	1	1	1
GYDT	115		Octal	Gravity times major cycle time (fps) (Y)	1	1	1	1	1
GZDT	116		Octal	Gravity times major cycle time (fps) (Z)	1	1	1	1	1
ØP	117		Octal	PGNCS Ø (pulses)	1	1	1	1	1
Δvsx	120		Octal	Resolved sensed ΔV along inertial axis (fps) (X)	1	1	1	1	1
Δvsy	121		Octal	Resolved sensed ΔV along inertial axis (fps) (Y)	1	1	1	1	1
Δvsz	122		Octal	Resolved sensed ΔV along inertial axis (fps) (Z)	1	1	1	1	1
SIGA	123		Octal	Sine of FDAI γ	1	1	1	1	1
RRX	124		Octal	Computed LM-CSM range (ft) (X)	1	1	1	1	1
RRY	125		Octal	Computed LM-CSM range (ft) (Y)	1	1	1	1	1
RRZ	126		Octal	Computed LM-CSM range (ft) (Z)	1	1	1	1	1
COGA	127		Octal	Cosine of FDAI γ	1	1	1	1	1
A11	130		Octal	XB direction cosine	1	1	1	1	1
A12	131		Octal	XB direction cosine	1	1	1	1	1
A13	132		Octal	XB direction cosine	1	1	1	1	1
A31	134		Octal	ZB direction cosine	1	1	1	1	1
A32	135		Octal	ZB direction cosine	1	1	1	1	1
A33	136		Octal	ZB direction cosine	1	1	1	1	1
A21	140		Octal	YB direction cosine	1	1	1	1	1
A22	141		Octal	YB direction cosine	1	1	1	1	1
A23	142		Octal	YB direction cosine	1	1	1	1	1
δ10	147		Octal	TPI logic flag	0	0	0	1	0

CREW-MAN	PNL	PROCEDURES	REMARKS

4.4.17 DEDA ACCESSIBLE PARAMETERS LIST (cont)

0 = not available
1 = available

Symbol	Address	Quantization Lunar	Quantization Earth		OI	CSI	CDH	TPI	XDV
Δ44	157	Octal		Radar code word received flag	1	1	1	1	1
A11D	160	Octal		XD direction cosine	1	1	1	1	1
A12D	161	Octal		XD direction cosine	1	1	1	1	1
A13D	162	Octal		XD direction cosine	1	1	1	1	1
A31D	164	Octal		ZD direction cosine	1	1	1	1	1
A32D	165	Octal		ZD direction cosine	1	1	1	1	1
A33D	166	Octal		ZD direction cosine	1	1	1	1	1
μ17	167	Octal		Filter cycle counter (2 sec counts)	1	1	1	1	1
α	171	Octal		Transfer orbit semimajor axis (ft)	0	0	0	1	0
R5X	174	100 ft	1000 ft	LM predicted position vector at TIG, or at present in OI (X)	1	1	1	1	1
R5Y	175	100 ft	1000 ft	LM predicted position vector at TIG, or at present in OI (Y)	1	1	1	1	1
R5Z	176	100 ft	1000 ft	LM predicted position vector at TIG, or at present in OI (Z)	1	1	1	1	1
AL	177	100 ft	1000 ft	Predicted LM semimajor axis	1	1	1	0	0
REX	200	100 ft	1000 ft	CSM epoch position vector (X)	1	1	1	1	1
REY	201	100 ft	1000 ft	CSM epoch position vector (Y)	1	1	1	1	1
REZ	202	100 ft	1000 ft	CSM epoch position vector (Z)	1	1	1	1	1
RT	203	100 ft	1000 ft	Predicted CSM position magnitude	1	1	1	1	1
ROX	204	100 ft	1000 ft	Position vector input to orbit parameter subroutine (X)	1	1	1	1	1
ROY	205	100 ft	1000 ft	Position vector input to orbit parameter subroutine (Y)	1	1	1	1	1
ROZ	206	100 ft	1000 ft	Position vector input to orbit parameter subroutine (Z)	1	1	1	1	1
RO	207	100 ft	1000 ft	Predicted position magnitude	1	1	1	1	1
R	210	100 ft	1000 ft	LM present inertial position magnitude	1	1	1	1	1
Y	211	100 ft	1000 ft	LM out-of-plane position	1	1	1	1	1
POUTFS	213	100 ft	1000 ft	Maximum p displayable	1	1	1	1	1
2K3	216	100 ft	1000 ft	QL set on overflow	1	1	1	1	1
2K14	217	100 ft	1000 ft	Initial p perturbation	1	1	1	1	1
25J	223	100 ft	1000 ft	Entry for altitude update	1	1	1	1	1
7J	224	100 ft	1000 ft	Term in (OI) semimajor axis computation	1	1	1	1	1

G.E.C. REF DATA

RC 1584

CREW-MAN	PNL	PROCEDURES	REMARKS

4.4.17 DEDA ACCESSIBLE PARAMETERS LIST (cont)

0 = not available
1 = available

Symbol	Address	Quantization Lunar	Quantization Earth		OI	CSI	CDH	TPI	XDV
8J	225	100 ft	1000 ft	One-half lower limit of apolune radius	1	1	1	1	1
10J	226	100 ft	1000 ft	Retarget value for 7J	1	1	1	1	1
4K5	227	100 ft	1000 ft	Nominal burnout altitude in OI	1	1	1	1	1
2K19	230	100 ft	1000 ft	Δp limiter	1	1	1	1	1
5J	231	100 ft	1000 ft	Nominal lunar landing site radius	1	1	1	1	1
16J	232	100 ft	1000 ft	Targeted orbit insertion altitude	1	1	1	1	1
21J	233	100 ft	1000 ft	Vertical pitch steering altitude threshold	1	1	1	1	1
1J1	240	100 ft	1000 ft	LM ephemeris position (X-component)	1	1	1	1	1
1J1	241	100 ft	1000 ft	LM ephemeris position (Y-component)	1	1	1	1	1
1J3	242	100 ft	1000 ft	LM ephemeris position (Z-component)	1	1	1	1	1
2J1	244	100 ft	1000 ft	CSM ephemeris position (X-component)	1	1	1	1	1
2J2	245	100 ft	1000 ft	CSM ephemeris position (Y-component)	1	1	1	1	1
2J3	246	100 ft	1000 ft	CSM ephemeris position (Z-component)	1	1	1	1	1
θR	252	0.01°		RR trunnion angle	0	1	1	1	1
βR	253	0.01°		RR shaft angle	0	1	1	1	1
RM	254	0.01 nm		RR range	0	1	1	1	1
1J7	254	0.1 min		LM epoch	1	1	1	1	1
$\dot{R}M$	255	0.1 fps	1 fps	RR range rate	0	1	1	1	1
δ46	256	Octal		Range scaling & data received indicator	0	1	1	1	1
1J4	260	0.1 fps	1 fps	X-component of LM velocity used in LM initialization	1	1	1	1	1
1J5	261	0.1 fps	1 fps	Y-component of LM velocity used in LM initialization	1	1	1	1	1
1J6	262	0.1 fps	1 fps	Z-component of LM velocity used in LM initialization	1	1	1	1	1
Vpy	263	0.1 fps	1 fps	Out-of-plane velocity at tig; at present in OI	1	1	1	1	1
2J4	264	0.1 fps	1 fps	X-component of CSM velocity used in CSM initialization	1	1	1	1	1
2J5	265	0.1 fps	1 fps	Y-component of CSM velocity used in CSM initialization	1	1	1	1	1
2J6	266	0.1 fps	1 fps	Z-component of CSM velocity used in CSM initialization	1	1	1	1	1
Vyo	270	0.1 fps	1 fps	LM present out-of-plane velocity	1	1	1	1	1
Vyofs	271	0.1 fps	1 fps	Maximum VYO displayable	1	1	1	1	1
2J7	272	0.1 min		CSM epoch	1	1	1	1	1
7K1	274	0.1 min		TIG offset	1	1	1	1	1
1J	275	0.1 min		Desired time of TPI maneuver for CSI	1	1	1	1	1

CREW-MAN	PNL	PROCEDURES	REMARKS

4.4.17 DEDA ACCESSIBLE PARAMETERS LIST (cont)

0 = not available
1 = available

Symbol	Address	Quantization Lunar	Quantization Earth		OI	CSI	CDH	TPI	XDV
ΔT	276	0.1 min		Time between radar range updates	1	1	1	1	1
ξ	277	0.01°		Angle between Z-body-axis and local horizon	1	1	1	1	1
θLOS	303	0.01°		Predicted LOS angle at TPI time (TPI only)	0	0	0	1	0
θF	303	0.01°		LM-CSM central angle at TIG	0	1	1	0	0
12J	305	0.01°		Phase angle limit for retargeting	1	1	1	1	1
4J	306	0.01 mi		Time of node prior to rendezvous	0	0	0	1	0
6J	307	0.01 min		Desired transfer time	1	1	1	1	1
TΔ	310	0.01 min		Time from present to next maneuver	0	1	1	1	1
Tr	311	0.01 min		Time from present to rendezvous	0	0	0	1	0
3J	312	0.01 min		Target offset time	1	1	1	1	1
Δrp	314	0.1 nm		LM-CSM differential altitude at tig	0	1	1	0	0
qa	315	0.1 nm		Apofocus altitude of LM trajectory	1	1	1	1	1
18J	316	0.01 nm	0.1 nm	Radar range	1	1	1	1	1
RR	317	0.01 nm	0.1 nm	Computed range	1	1	1	1	1
h	337	0.1 nm		LM altitude	1	1	1	1	1
rx	340	100 ft	1000 ft	X-component of LM position	1	1	1	1	1
ry	341	100 ft	1000 ft	Y-component of LM position	1	1	1	1	1
rz	342	100 ft	1000 ft	Z-component of LM position	1	1	1	1	1
rcx	344	100 ft	1000 ft	X-component of CSM position	1	1	1	1	1
rcy	345	100 ft	1000 ft	Y-component of CSM position	1	1	1	1	1
rcz	346	100 ft	1000 ft	Z-component of CSM position	1	1	1	1	1
rf	347	100 ft	1000 ft	Predicted LM altitude at tig (at burnout in OI)	1	1	1	1	1
Vx	360	0.1 fps	1 fps	X-component of present LM inertial velocity vector	1	1	1	1	1
Vy	361	0.1 fps	1 fps	Y-component of present LM inertial velocity vector	1	1	1	1	1
Vz	362	0.1 fps	1 fps	Z-component of present LM inertial velocity vector	1	1	1	1	1
Vcx	364	0.1 fps	1 fps	X-component of present CSM inertial velocity vector	1	1	1	1	1
Vcy	365	0.1 fps	1 fps	Y-component of present CSM inertial velocity vector	1	1	1	1	1

G & C REF DATA

RC 1584

CREW-MAN	PNL	PROCEDURES	REMARKS

4.4.17 DEDA ACCESSIBLE PARAMETERS LIST (cont)

0 = not available
1 = available

Symbol	Address	Quantization Lunar	Quantization Earth		OI	CSI	CDH	TPI	XDV
Vcz	366	0.1 fps	1 fps	Z-component of present CSM inertial velocity vector	1	1	1	1	1
$\dot{h}$	367	0.1 fps	1 fps	LM altitude rate	1	1	1	1	1
VG	370	0.1 fps	1 fps	Magnitude of velocity to be gained	1	1	1	1	1
VF	371	0.1 fps	1 fps	TPI braking velocity	0	0	0	1	0
TAO	372	0.1 min		Time from CSI to CDH	0	1	0	0	0
tig	373	0.1 min		Absolute time of next maneuver	1	1	1	1	1
TA1	377	0.1 min		AGS absolute time	1	1	1	1	1
SO	400	Octal		AGS function selector	1	1	1	1	1
DISC1C	401	Octal		Discrete word one	1	1	1	1	1
ΔH	402	0.1 nm		LM-CSM differential altitude after CDH	0	1	1	0	0
q1DEDA	402	0.1 nm		LM transfer orbit pericythion altitude	0	0	0	1	0
qLTELE	403	0.1 nm		LM present pericythion altitude	1	1	1	1	1
δ6	407	Octal		Flag to initiate alignment prior to calibration	1	1	1	1	1
S10	410	Octal		Guidance mode selector	1	1	1	1	1
S11	411	Octal		Auto radar update selector	1	1	1	1	1
S12	412	Octal		In-flight self-test status indicator	1	1	1	1	1
S13	413	Octal		Store/no-store lunar azimuth selector	1	1	1	1	1
S14	414	Octal		Navigation initialization	1	1	1	1	1
S15	415	Octal		Radar gimbal null (enter only)	1	1	1	1	1
$\dot{R}$*	415	Octal		Range rate at time of mark (read only)	1	1	1	1	1
S16	416	Octal		Number of LM half-orbits from CSI to CDH	1	1	1	1	1
S17	417	Octal		Radar filter initialization	1	1	1	1	1
Vex	420	0.1 fps	1 fps	CSM epoch velocity vector (X)	1	1	1	1	1
Vey	421	0.1 fps	1 fps	CSM epoch velocity vector (Y)	1	1	1	1	1
Vez	422	0.1 fps	1 fps	CSM epoch velocity vector (Z)	1	1	1	1	1
$\dot{r}$f	423	0.1 fps	1 fps	Desired altitude rate	1	1	1	1	0
Vox	424	0.1 fps	1 fps	Velocity vector input to orbit parameter subroutine (X)	1	1	1	1	1
Voy	425	0.1 fps	1 fps	Velocity vector input to orbit parameter subroutine (Y)	1	1	1	1	1
Voz	426	0.1 fps	1 fps	Velocity vector input to orbit parameter subroutine (Z)	1	1	1	1	1
Vh	427	0.1 fps	1 fps	Present LM horizontal velocity	1	1	1	1	1
V	433	0.1 fps	1 fps	Present LM velocity	1	1	1	1	1

RC 1584

CREW-MAN	PNL	PROCEDURES	REMARKS

4.4.17 DEDA ACCESSIBLE PARAMETERS LIST (cont)

0 = not available
1 = available

Symbol	Address	Quantization Lunar	Quantization Earth		OI	CSI	CDH	TPI	XDV
. RR	440	0.1 fps	1 fps	Estimated range rate between LM and CSM (negative value indicates LM closing on CSM)	1	1	1	1	1
. R	441	0.1 fps	1 fps	Range rate at time of radar update	1	1	1	1	1
4K25	446	0.1 fps	1 fps	Engine cutoff compensation	1	1	1	1	1
28J1	450	0.1 fps	1 fps	ΔV downrange (XDV input)	0	1	1	0	1
28J2	451	0.1 fps	1 fps	ΔV crossrange (XDV input)	0	1	1	0	1

G & C REF DATA

RC 1584

CREW-MAN	PNL	PROCEDURES	REMARKS

4.4.17 DEDA ACCESSIBLE PARAMETERS LIST (cont)

0 = not available
1 = available

Symbol	Address	Quantization Lunar	Quantization Earth		OI	CSI	CDH	TPI	XDV
28J3	452	0.1 fps	1 fps	ΔV radial (XDV input)	0	1	1	0	1
4K26	454	0.1 fps	1 fps	VG threshold	1	1	1	1	1
Vha	463	0.1 fps	1 fps	Horizontal velocity at tig; present horizontal velocity in OI	1	1	1	1	1
22J	464	0.1 fps	1 fps	Vertical pitch steering altitude rate threshold	1	1	1	1	1
23J	465	0.1 fps	1 fps	RF DOT lower limit	1	1	1	1	1
5K26	466	0.1 fps	1 fps	Threshold for freezing thrust direction	1	1	1	1	1
VDX	470	0.1 fps	1 fps	Accumulated total of sensed velocity increments updated every 2 seconds (X)	1	1	1	1	1
VDY	471	0.1 fps	1 fps	Accumulated total of sensed velocity increments updated every 2 seconds (Y)	1	1	1	1	1
VDZ	472	0.1 fps	1 fps	Accumulated total of sensed velocity increments updated every 2 seconds (Z)	1	1	1	1	1
4K27	473	0.1 fps	1 fps	Descent abort VG overflow protection	1	1	1	1	1
VSmgx	474	0.1 fps	1 fps	X-component of velocity to be gained during burn	1	1	1	1	1
VSmgy	475	0.1 fps	1 fps	Y-component of velocity to be gained during burn	1	1	1	1	1
VSmgz	476	0.1 fps	1 fps	Z-component of velocity to be gained during burn	1	1	1	1	1
$\dot{r}a$	477	0.1 fps	1 fps	Radial velocity at tig (at present in OI	1	1	1	1	1
ΔVgx	500	0.1 fps	1 fps	Increments of total velocity to be gained during burn (X)	1	1	1	1	1
ΔVgy	501	0.1 fps	1 fps	Increments of total velocity to be gained during burn (Y)	1	1	1	1	1
ΔVgz	502	0.1 fps	1 fps	Increments of total velocity to be gained during burn (Z)	1	1	1	1	1
17J	503	0.1 fps	1 fps	Radar range rate input	1	1	1	1	1
$\dot{R}\dot{D}$	504	Octal		Desired radial jerk (fps cubed)	1	0	0	0	0

CREW-MAN	PNL	PROCEDURES	REMARKS

4.4.17 DEDA ACCESSIBLE PARAMETERS LIST (cont)

0 = not available
1 = available

Symbol	Address	Quantization Lunar	Quantization Earth		OI	CSI	CDH	TPI	XDV
$\dddot{Y}D$	505		Octal	Desired out-of-plane jerk (fps cubed)	1	0	0	0	0
4K12	506		Octal	Acceleration check for RD3DTL in OI	1	1	1	1	1
S507	507		Octal	Orient Z-body-axis to thrust axis	1	1	1	1	1
C1	513		Octal	Rendezvous angle cosine	0	0	0	1	0
Wbx	514		Octal	Unit vector input for commanding YAW when SOO=1(X)	1	1	1	1	1
Wby	515		Octal	Unit vector input for commanding YAW when SOO=1(Y)	1	1	1	1	1
Wbz	516		Octal	Unit vector input for commanding YAW when SOO=1(Z)	1	1	1	1	1
6K10	517		Octal	Radar range rate null	1	1	1	1	1

G & C REF DATA

RC 1584

CREW-MAN	PNL	PROCEDURES	REMARKS

4.4.17 DEDA ACCESSIBLE PARAMETERS LIST (cont)

0 = not available
1 = available

Symbol	Address	Quantization Lunar	Quantization Earth		OI	CSI	CDH	TPI	XDV
TE1	520	Octal		CSM epoch MS (sec)	1	1	1	1	1
TL1	521	Octal		LM epoch MS (sec)	1	1	1	1	1
6K6	522	Octal		Radar filter VY weight (No units)	1	1	1	1	1
5K20	523	Octal		$\dot{R}\dot{D}$ lower limit term (2/sec)	1	1	1	1	1
TE2	524	Octal		CSM epoch LS (sec)	1	1	1	1	1
TL2	525	Octal		LM epoch LS (sec)	1	1	1	1	1
2K11	526	Octal		Set value of VT (fps, no TPI solution)	1	1	1	1	1
4K6	527	Octal		RF upper limit (fps)	1	1	1	1	1
Daxa	530	Octal		X-axis alignment error signal (rad)	1	1	1	1	1
Daya	531	Octal		Y-axis alignment error signal (rad)	1	1	1	1	1
Daza	532	Octal		Z-axis alignment error signal (rad)	1	1	1	1	1
DISC1	533	Octal		Discrete word one complement	1	1	1	1	1
1K18	534	Octal		X-accelerometer scale factor (fps/pulse)	1	1	1	1	1
1K20	535	Octal		Y-accelerometer scale factor (fps/pulse)	1	1	1	1	1
1K22	536	Octal		Z-accelerometer scale factor (fps/pulse)	1	1	1	1	1
1K14	537	Octal		X-axis mass unbalance compensation (rad/fps)	1	1	1	1	1
1K19	540	0.001 fps sq	0.01 fps sq	X-accelerometer bias compensation	1	1	1	1	1
1K21	541	0.001 fps sq	0.01 fps sq	Y-accelerometer bias compensation	1	1	1	1	1
1K23	542	0.001 fps sq	0.01 fps sq	Z-accelerometer bias compensation	1	1	1	1	1
1K1	544	0.01°/hr		X-gyro drift compensation coefficient	1	1	1	1	1
1K6	545	0.01°/hr		Y-gyro drift compensation coefficient	1	1	1	1	1
1K11	546	0.01°/hr		Z-gyro drift compensation coefficient	1	1	1	1	1
DΔ	547	Octal		Lunar align correction (rad)	1	1	1	1	1
1K3	550	Octal		X-gyro scale factor compensation	1	1	1	1	1
1K8	551	Octal		Y-gyro scale factor compensation	1	1	1	1	1
1K13	552	Octal		Z-gyro scale factor compensation	1	1	1	1	1
Hrf	553	Octal		High (+), low (-) angular rate scaling	1	1	1	1	1
A31S	554	Octal		Radar null direction cosine	1	1	1	1	1
A32S	555	Octal		Radar null direction cosine	1	1	1	1	1
A33S	556	Octal		Radar null direction cosine	1	1	1	1	1
5K14	560	Octal		$\dddot{R}\dot{D}$ upper limit (fps cubed)	1	1	1	1	1

RC 156

CREW-MAN	PNL	PROCEDURES	REMARKS

4.4.17 DEDA ACCESSIBLE PARAMETERS LIST (cont)

0 = not available
1 = available

Symbol	Address	Quantization Lunar	Quantization Earth		OI	CSI	CDH	TPI	XDV
5K16	561		Octal	$\dot{Y}\dot{D}^{\bullet}$ upper limit (fps cubed)	1	1	1	1	1
DLWN	562		Octal	Downlink word counter	1	1	1	1	1
δ32	563		Octal	Downlink initialize flag (Negative indicates enable)	1	1	1	1	1
6KB	564		Octal	Radar filter range rate variance (fps sq)	1	1	1	1	1
6K9	565		Octal	Radar filter angular variance (rad sq)	1	1	1	1	1
6K10	566		Octal	Radar filter range variance (ft sq)	1	1	1	1	1
DSPF1	567		Octal	Display flag (Negative indicates navigation update cycle)	1	1	1	1	1
ID1F	570		Octal	Downlink identification 1 (received if negative)	1	1	1	1	1
δ31	571		Octal	Downlink input (complete if negative)	1	1	1	1	1
FLAGT	572		Octal	Memory test (test if negative)	1	1	1	1	1
FLAG1	573		Octal	20-ms branch control	1	1	1	1	1
Δ2	574		Octal	Staged flag (Negative indicates staged)	1	1	1	1	1
Δ5	575		Octal	Attitude hold flag (Negative indicates attitude hold)	1	1	1	1	1
π	576		Octal	π (Fix θ at 0 to 2 π)	1	1	1	1	1
6K13	577		Octal	Radar range rate to fps at 13	1	1	1	1	1
DVGXX	600		Octal	X component of total velocity to be gained vector	1	1	1	0	1
DVGXY	601		Octal	Y component of total velocity to be gained vector	1	1	1	0	1
DVGXZ	602		Octal	Z component of total velocity to be gained vector	1	1	1	0	1
Δ20	603		Octal	Logic flag for engine control	1	1	1	1	1
Δ21	604		Octal	Lunar surface flag (Negative indicates on lunar surface)	1	1	1	1	1
2J	605		Octal	Cotangent of desired LOS angle	1	1	1	1	1
δ45	606		Octal	RR range/range rate selection flag	1	1	1	1	1
K55	607		Octal	Scale factor for H display	1	1	1	1	1
RD3DTL	610		Octal	$\ddot{R}$ lower limit (fps cubed)	1	0	0	0	0
5K17	611		Octal	$\ddot{Y}$ lower limit (fps cubed)	1	0	0	0	0
m6	612		Octal	Staging counter (40m sec counts)	1	1	1	1	1
1K37	613		Octal	Acceleration calibration duration (2 second)	1	1	1	1	1

G & C REF DATA

RC 1584

CREW-MAN	PNL	PROCEDURES	REMARKS

4.4.17 DEDA ACCESSIBLE PARAMETERS LIST (cont)

0 = not available
1 = available

Symbol	Address	Quantization Lunar	Quantization Earth		OI	CSI	CDH	TPI	XDV
m8	614	1 count		Ullage counter (2 second count)	1	1	1	1	1
1K9	616	1 count		Ullage counter threshold (2 second count)	1	1	1	1	1
1K30	617	1 count		Gyro calibrate time duration (2 sec count)	1	1	1	1	1
2K17	620	1 count		Number of p iterations -3	1	1	1	1	1
μ19	621	Split integer		Range/range rate mark counter since last filter initialization	1	1	1	1	1
4K23	622	1 count		Steering delay after staging (40 msec count)	1	1	1	1	1
S623	623	Octal		Crew selection of steering vector	1	1	1	1	1
1K4	624	Octal		Altitude and altitude rate display constant	1	1	1	1	1
1K24	625	Octal		Singularity threshold, FDAI compensation (rad)	1	1	1	1	1
1K26	626	Octal		X-axis alignment gain constant (1/rad)	1	1	1	1	1
1K27	627	Octal		Lunar align constant (rad/fps)	1	1	1	1	1
1K28	630	Octal		Lunar align constant (1/rad)	1	1	1	1	1
1K29	631	Octal		Lunar align stop criterion (rad)	1	1	1	1	1
1K33	632	Octal		Calibrate gain constant	1	1	1	1	1
1K34	633	Octal		Calibrate gain constant (1/20 ms)	1	1	1	1	1
1K35	634	Octal		Navigation sensed accelerometer bias threshold (fps)	1	1	1	1	1
1K36	635	Octal		Accelerometer calibration gain constant	1	1	1	1	1
2K1	636	Octal		Gravitational constant (ft cubed/sec sq)	1	1	1	1	1
2K2	637	Octal		Gravitational constant reciprocal	1	1	1	1	1
6J1	640	Octal		Negative lunar rate about X inertial axis (rad/20 ms)	1	1	1	1	1
6J2	641	Octal		Negative lunar rate about Y inertial axis (rad/20 ms)	1	1	1	1	1
6J3	642	Octal		Negative lunar rate about Z inertial axis (rad/20 ms)	1	1	1	1	1
P21	644	Octal		ΔV sum for acceleration calibration (X)	1	1	1	1	1
P22	645	Octal		ΔV sum for acceleration calibration (Y)	1	1	1	1	1
P23	646	Octal		ΔV sum for acceleration calibration (Z)	1	1	1	1	1
μ7	647	Octal		Calibration counter	1	1	1	1	1
7K2	650	Octal		Noise in P-Matrix diagonals	1	1	1	1	1

RC 1584

CREW-MAN	PNL	PROCEDURES	REMARKS

4.4.17 DEDA ACCESSIBLE PARAMETERS LIST (cont)

0 = not available
1 = available

Symbol	Address	Quantization Lunar	Quantization Earth		OI	CSI	CDH	TPI	XDV
4K2	654	Octal		Time-to-burn computation factor (1/fps)	1	1	1	1	1
4K3	655	Octal		Time-to-burn computation factor (1/fps sq)	1	1	1	1	1
4K34	660	Octal		Lower limit thrust acceleration (ft/sec sq)	1	1	1	1	1
4K35	661	Octal		Ullage threshold (ft/sec sq)	1	1	1	1	1
4K10	662	Octal		Term in AL (0,1) (ft/rad)	1	1	1	1	1
4K21	666	Octal		Scale factor for attitude error output (rad)	1	1	1	1	1
M25B16	667	Octal		Cycle counts to seconds factor	1	1	1	1	1
Dtb	670	Octal		One second plus DEDA time bias	1	1	1	1	1
ID1	671	Octal		Downlink code	1	1	1	1	1
11J	673	Octal		Retarget value for 4K10 (ft/rad)	1	1	1	1	1
2K4	674	Octal		-2(2K1) (ft cubed/sec)	1	1	1	1	1
KDT	675	Octal		ΔT/2 (sec)	1	1	1	1	1
P11	700	Octal		RR filter X-Position Variance (Variable scaling)	1	1	1	1	1
P12	701	Octal		RR filter X, Y-P covariance (Variable scaling)	1	1	1	1	1
P13	702	Octal		RR filter X-Position, X-Velocity covariance (Variable scaling)	1	1	1	1	1
P14	703	Octal		RR filter X-Position, Z-Velocity covariance (Variable scaling)	1	1	1	1	1
P21	704	Octal		RR filter X, Z-Position covariance (Variable scaling)	1	1	1	1	1
				Conversion Scale Factors					
B13SF	643	Octal		0.01 min to sec scaled at 13	1	1	1	1	1
B13VSF	651	Octal		0.1/1 fps to fps scaled at 13/15	1	1	1	1	1
B3SF	652	Octal		0.01° to rad scaled at 3	1	1	1	1	1
B23RSF	653	Octal		0.1 nm to ft scaled at 23/25	1	1	1	1	1
B22RSF	656	Octal		0.01 nm to ft scaled at 22/24	1	1	1	1	1
BACCSF	657	Octal		0.001/0.01 fps sq to fps/20 ms scaled at 1/3	1	1	1	1	1
B18SF	665	Octal		0.1 min to sec scaled at 18	1	1	1	1	1
BM13SF	676	Octal		0.01°/hr to rad/20 ms scaled at -13	1	1	1	1	1
B23SF	677	Octal		100/1000 ft to ft scaled at 23/25	1	1	1	1	1

PARA	TITLE	PAGE
4.5	G&C Reference Modes	4.5-2
4.5.1	Attitude Control Modes	4.5-2
4.5.1.1	RCS Primary Coil Enable	4.5-2
4.5.1.2	PGNCS Automatic	4.5-2A
4.5.1.3	PGNCS Attitude Hold/Rate Command	4.5-4
4.5.1.4	PGNCS Minimum Impulse	4.5-4A
4.5.1.5	AGS Automatic	4.5-6
4.5.1.6	AGS Attitude Hold/Rate Command	4.5-8
4.5.1.7	AGS Pulse	4.5-10
4.5.1.8	AGS Direct	4.5-12
4.5.1.9	ACA Hardover	4.5-14
4.5.2	Translation Control Modes	4.5-14
4.5.2.1	Descent Engine On/Off Control	4.5-14
4.5.2.2	Ascent Engine On/Off Control	4.5-19
4.5.2.3	Descent Engine Throttle Control	4.5-22
4.5.2.4	GDA Enable	4.5-27
4.5.2.5	RCS Translation	4.5-28
4.5.3	Dynamic Display Modes	4.5-30
4.5.3.1	PGNCS Total Attitude Display	4.5-30
4.5.3.2	PGNCS Attitude Rate/Error Display	4.5-32
4.5.3.3	AGS Total Attitude Display	4.5-33
4.5.3.4	AGS Attitude Error Display	4.5-34
4.5.3.5	Attitude Rate Display	4.5-34
4.5.3.6	RR Shaft Angle/Trunnion Angle Display	4.5-35
4.5.3.7	RR Azimuth Rate/Elevation Rate Display	4.5-36
4.5.3.8	Forward Velocity/Lateral Velocity Display	4.5-36
4.5.3.9	Altitude/Altitude Rate Display	4.5-37
4.5.3.10	Range/Range Rate Display	4.5-37
4.5.3.11	Thrust Display	4.5-38
4.5.3.12	Radar Signal Strength Display	4.5-39
4.5.3.13	Heater Control Temperature Monitor Display	4.5-39
4.5.3.14	RR LOS Azimuth and Elevation Display (V85)	4.5-40

CREW-MAN	PNL	PROCEDURES	REMARKS
		4.5 G&C REFERENCE MODES	
		The G&C reference modes cover basic G&C functions in terms of related subsystem operating prerequisites and switch positions, and are limited in their scope to independent subsystem functions. The modes may be repeated and, in general, apply to G&C procedures; they are not intended as complete or self-contained procedures. Because some procedures do not require all operating prerequisites or switch positions in a given reference mode, they are accomplished without referring to that mode.	
		When a G&C reference mode refers to another reference mode, reference is made by title and paragraph number and, where applicable, options are recommended.	
		During time-critical procedures, reference to other sections or paragraphs of this handbook cannot be accommodated. Because time-critical procedures must be self-contained, information normally referred to by section or paragraph number is repeated within those procedures.	
		4.5.1 ATTITUDE CONTROL MODES	
		4.5.1.1 RCS Primary Coil Enable	Provides d-c power to primary coils of oxidizer and fuel valves of RCS systems A and B. This mode alone is not sufficient to allow RCS jets to fire via primary coils.
	11	1. CB RCS SYS A: QUAD 4 TCA - close	Provides d-c power to primary coils of oxidizer and fuel valves of RCS system A, jets 4R and 4D.
		2. CB RCS SYS A: QUAD 3 TCA - close	Provides d-c power to primary coils of oxidizer and fuel valves of RCS system A, jets 3R and 3U.
		3. CB RCS SYS A: QUAD 2 TCA - close	Provides d-c power to primary coils of oxidizer and fuel valves of RCS system A, jets 2A and 2D.
		4. CB RCS SYS A: QUAD 1 TCA - close	Provides d-c power to primary coils of oxidizer and fuel valves of RCS system A, jets 1F and 1U.
	16	5. CB RCS SYS B: QUAD 1 TCA - close	Provides d-c power to primary coils of oxidizer and fuel valves of RCS system B, jets 1L and 1D.
		6. CB RCS SYS B: QUAD 2 TCA - close	Provides d-c power to primary coils of oxidizer and fuel valves of RCS system B, jets 2L and 2U.
		7. CB RCS SYS B: QUAD 3 TCA - close	Provides d-c power to primary coils of oxidizer and fuel valves of RCS system B, jets 3A and 3D.
		8. CB RCS SYS B: QUAD 4 TCA - close	Provides d-c power to primary coils of oxidizer and fuel valves of RCS system B, jets 4F and 4U.

CREW-MAN	PNL	PROCEDURES	REMARKS
		4.5.1.2 PGNCS Automatic	In PGNCS automatic mode, LGC provides following: Automatic steering (three-axis rotation) Automatic ullage Automatic rate compensation Attitude hold to program-defined attitude. X-axis override, whereby astronaut commands X-axis attitude rates proportional to ACA displacement, is available. Attained yaw attitude is maintained by LGC. (Maximum commanded rate is either 4° or 20°/second if docked as selected in DAP Data Load Routine).
		LGC Power-Up (required)	Ref para 4.6.1.1.
		IMU Power-Up (LGC operating) (required)	Ref para 4.6.1.3. CB PGNS: IMU OPR also supplies d-c power to PSA, which develops 28v, 800-cps, single phase for ACA proportional excitation and TTCA throttling.
		DAP Data Load Routine (R03) (required)	Ref para 4.6.1.8. Most programs, and extended verbs that perform maneuvers, require P51 and check for it via R02.
		RCS Primary Coil Enable (required)	Ref para 4.5.1.1.
	11	1. CB RCS SYS A: QUAD 2 TCA - open (if docked with CSM)	This step disables jet pair A2A/A2D to produce fewer jet firings, less bending excitation, and slight RCS propellant saving.
		2. CB S/C: ATCA (PGNS) - close CAUTION To prevent inadvertent RCS jet firing, S/C: PGNS sw - OFF before CB S/C: ATCA (PGNS) - close	Provides d-c power for selecting PGNCS operation via GUID CONT sw - PGNS, bias to ATCA out-of detent relay, and enable voltage to ATCA primary preamplifiers via S/C: PGNS sw - AUTO or ATT HOLD.

LM 3231, LM 3235

CREW-MAN	PNL	PROCEDURES	REMARKS
		4.5.1.2 PGNCS Automatic (cont)	
		3. Establish PGNCS automatic control:	
	1	GUID CONT sw - PGNS	Sets bank of relays required for PGNS operation and for routing followup signal to AEA.
	3	S/C: PGNS sw - AUTO	Provides automatic discrete to LGC and routes +28-vdc enable signal to ATCA primary preamplifiers through contact closure established when GUID CONT sw - PGNS. When S/C: PGNS sw is moved out of OFF position to ATT HOLD or AUTO move switch guard to cover OFF position.

CREW-MAN	PNL	PROCEDURES	REMARKS
		4.5.1.2 PGNCS Automatic (cont)	
		S/C: ROLL, PITCH, & YAW sw - MODE CONT or PULSE	Switches do not affect PGNCS attitude when set to MODE CONT or PULSE; if set to DIR, with ACA 2.5° out of detent, RCS jets will fire via secondary coils in addition to firing via primary coils. This results in acceleration to greater rate than commanded. LGC will attempt to maintain commanded rate by firing opposing jets.
	1, 2	4. Establish X-axis override capability: ACA PROP sw (2) - ENABLE	Provides 800-cps power to ACA proportional primary windings.
	ACA	5. ACA - maneuver as desired (X-axis only)	LGC will ignore commands, via ACA, to fire RCS jets, except in X-axis.
		4.5.1.3 PGNCS Attitude Hold/Rate Command	In PGNCS attitude hold/rate command mode, LGC provides LM stabilization and automatic rate damping. Attitude can be changed using ACA. When ACA is returned to detent, LGC DAP damps rate, stores attitude after rate damping, and holds to new attitude.
		LGC Power-Up (required)	Ref para 4.6.1.1.
		IMU Power-Up (LGC Operating) (required)	Ref para 4.6.1.3. CB PGNS: IMU OPR also supplies d-c power to PSA, which develops 28v, 800-cps, single phase for ACA proportional excitation and TTCA throttling.
		DAP Data Load Routine (R03) (required)	Ref para 4.6.1.8.
		IMU Orientation Determination (P51) (required)	Ref para 4.9.1.1.
		RCS Primary Coil Enable (required)	Ref para 4.5.1.1.
	11	1. CB RCS SYS A: QUAD 2 TCA - open (if docked with CSM)	This step disables jet pair A2A/A2D to produce fewer jet firings, less bending excitation, and slight RCS propellant savings.
		2. CB S/C: ATCA (PGNS) - close CAUTION To prevent inadvertent RCS jet firing, S/C: PGNS sw - OFF before CB S/C: ATCA (PGNS) - close.	Provides d-c power for selecting PGNCS operation via GUID CONT sw - PGNS, bias to ATCA out-of-detent relay, and enable voltage to ATCA primary preamplifiers via S/C: PGNS sw - AUTO or ATT HOLD.

LM 3207, LM 3231, LM 3235

CREW-MAN	PNL	PROCEDURES	REMARKS
		4.5.1.3 PGNCS Attitude Hold/Rate Command (cont)	
		3. Establish PGNCS attitude hold control:	
	1	GUID CONT sw - PGNS	Sets bank of relays for PGNCS operation and for routing followup signal to AEA.
	3	S/C:	
		PGNS sw - ATT HOLD	Provides attitude hold discrete to LGC and routes +28-vdc enable signal to ATCA primary preamplifiers through contact closure established when GUID CONT sw - PGNS.
			When S/C:PGNS sw is moved out of OFF position to ATT HOLD or AUTO move switch guard to cover OFF position.
		ROLL, PITCH, & YAW sw - MODE CONT or PULSE	Switches do not affect PGNCS attitude control when set to MODE CONT or PULSE; if set to DIR, with ACA 2.5° out of detent, RCS jets will fire via secondary coils in addition to firing via primary coils. This results in acceleration to greater rate than commanded. LGC will attempt to maintain commanded rate by firing opposing jets.
		4. Establish rate command capability:	
	1, 2	ACA PROP sw (2) - ENABLE	Provides 800-cps power to ACA proportional primary winding.
		Key V77E No DAP lt - off	Required to establish rate command capability. Commanded rate is proportional to ACA displacement. Maximum commanded rate is either 4° or 20°/sec, as indicated in DAP Data Load Routine (R03). Ref para 4.6.1.8.
	ACA	5. ACA - maneuver as desired	
		4.5.1.4 PGNCS Minimum Impulse	Releases attitude hold on LM (free drift) and allows one impulse per each ACA displacement >2.5° from detent.
		LGC Power-Up (required)	Ref para 4.6.1.1.
		IMU Power-Up (LGC Operating) (required)	Ref para 4.6.1.3. CB PGNS: IMU OPR also supplies d-c power to PSA, which develops 28v, 800-cps, single phase for ACA proportional excitation and TTCA throttling.

LM 3207, LM 3231, LM 3235

CREW-MAN	PNL	PROCEDURES	REMARKS
		4.5.1.4 PGNCS Minimum Impulse (cont)	
		DAP Data Load Routine (R03) (required)	Ref para 4.6.1.8.
		IMU Orientation Determination (P51) (required)	Ref para 4.9.1.1.
		RCS Primary Coil Enable (required)	Ref para 4.5.1.1.
	11	1. CB S/C: ATCA (PGNS) - close	Provides d-c power for selecting PGNCS operation via GUID CONT sw - PGNS, bias to ATCA out-of-detent relay, and enable voltage to ATCA primary preamplifiers via S/C: PGNS sw - AUTO or ATT HOLD.
		CAUTION To prevent inadvertent RCS jet firing, S/C: PGNS sw - OFF before CB S/C: ATCA (PGNS) - close.	
		2. Establish PGNCS minimum impulse control:	
	1	GUID CONT sw - PGNS	Sets bank of relays for PGNCS operation and for routing followup signal to AEA.
	3	S/C: PGNS sw - ATT HOLD	Permits LGC to accept all ACA inputs. Provides attitude hold discrete to LGC and routes +28-vdc enable to ATCA primary preamplifiers through contact closure established when GUID CONT sw - PGNS. When S/C:PGNS sw is moved out of OFF position to ATT HOLD or AUTO move switch guard to cover OFF position.
		ROLL, PITCH, & YAW sw - MODE CONT	Switches must be set to MODE CONT to get minimum impulse.
		Key V76E No DAP lt - on	Establishes minimum impulse control and removes attitude hold capability. V77E, V36E, or ignition sequence in P12, P40, P41, P42, P63, P70, P71, and R40 terminates minimum impulse control and reestablishes attitude hold and rate command capabilities. (No DAP lt - off)
	ACA	3. ACA - maneuver as desired	

LM 3207, LM 3235

CREW-MAN	PNL	PROCEDURES	REMARKS
		4.5.1.5 AGS Automatic	Provides AEA automatic attitude control. In this mode, guidance steering (X-axis) (address 400+100000) and Z-axis steering (acquisition steering) (address 400+200000) should not be selected, unless specified by particular procedure. Selection of either steering mode at other times, while AGS automatic mode is in control, may cause LM attitude rate changes of 10°/second in pitch and 5°/second in roll and yaw.
		AGS Power-Up (required)	Ref para 4.6.2.1.
		AGS Checkout (desired)	Ref para 4.6.2.4.

CREW-MAN	PNL	PROCEDURES	REMARKS
		4.5.1.5 AGS Automatic (cont)	
		AGS LM/CSM state vector valid (required)	AGS Initialization Routine (R47) (para 4.6.1.18), or AGS Manual LM State Vector Update/Initialization (para 4.6.2.7) and AGS Manual CSM State Vector Update/Initialization (para 4.6.2.9).
		PGNCS/AGS Align (required)	Ref para 4.9.2.1. AGS initialization and alignment are required for guidance steering and Z-axis steering, but are not required when LM is holding attitude in AGS automatic mode.
		RCS Primary Coil Enable (required)	Ref para 4.5.1.1.
	16	1. CB S/C: ATCA - close ATCA (AGS) - close	Provides d-c power to ATCA power supply. Provides d-c power for selecting AGS operation via GUID CONT sw - AGS, bias for ATCA out-of-detent relay, and enable voltage to ATCA abort preamplifiers via S/C: AGS sw - AUTO or ATT HOLD.
		CAUTION To prevent inadvertent RCS jet firing, S/C: AGS sw - OFF before CB S/C: ATCA (AGS) - close.	
		2. Establish AGS automatic control:	
	1	GUID CONT sw - AGS	Sets bank of relays for AGS operation.
	3	S/C: AGS sw - AUTO	Provides automatic discrete to AEA and routes +28-vdc enable voltage to ATCA abort preamplifiers through contact closure established when GUID CONT sw - AGS. Automatic DPS and APS engine-off signal path is established for AEA-generated engine-off commands.
		ROLL, PITCH, & YAW sw - MODE CONT	Switches route AEA attitude commands to ATCA and enable ATCA gimbal trim commands to be routed to DECA via GUID CONT sw - AGS. ATCA limits attitude rates, except when LM is staged and in wide deadband. In this configuration attitude rates of 29.6°/second could be attained, which are greater than AGS ability to follow and could result in loss of valid attitude rate data.

CREW-MAN	PNL	PROCEDURES	REMARKS
		4.5.1.5 AGS Automatic (cont)	
	1	ENG THR CONT: BAL CPL sw - ON	Routes +28-vdc enable signal, provided via S/C: AGS sw - AUTO, to ATCA four up-firing abort preamplifiers. ENG THR CONT: BAL CPL sw - ON during all mission phases, except during APS engine burns. This permits RCS to add to net thrust when under AGS control.
	3	S/C: DEAD BAND sw - MAX or MIN	In MAX position, attitude deadband in roll, pitch, and yaw is 5°. In MIN position, attitude deadband in pitch and roll is 0.3°; in yaw, 0.4°. Minimum deadband is automatically provided during MPS thrusting, as backup to S/C: DEAD BAND sw. Attitude rate deadband, when unstaged, is ±0.2°/second (narrow) and ±3.33°/second (wide). Attitude rate deadband, when staged, is ±0.75°/second (narrow) and ±12.5°/second (wide).
	1	ATT/TRANSL sw - 2 JETS or 4 JETS	Selects either two- or four-jet operation for X-translation or pitch and roll attitude maneuvers.
		4.5.1.6 AGS Attitude Hold/Rate Command	Provides automatic stabilization signals from AEA when ACA is in detent, and permits attitude changes with CES rate stabilization when ACA is moved out of detent.
		AGS Power-Up (required)	Ref para 4.6.2.1.
		AGS Checkout (desired)	Ref para 4.6.2.4.
		RCS Primary Coil Enable (required)	Ref para 4.5.1.1.
	16	1. CB S/C: ATCA - close	Provides d-c power to ATCA power supply.
		ATCA (AGS) - close	Provides d-c power for selecting AGS operation via GUID CONT sw - AGS, bias for ATCA out-of-detent relay, and enable voltage to ATCA abort preamplifiers via S/C: AGS sw - AUTO or ATT HOLD.
		CAUTION To prevent inadvertent RCS jet firing, S/C: AGS sw - OFF before CB S/C: ATCA (AGS) - close.	
	1	2. Establish AGS attitude hold control: GUID CONT sw - AGS	Sets bank of relays for AGS operation.

CREW-MAN	PNL	PROCEDURES	REMARKS
		4.5.1.6 AGS Attitude Hold/Rate Command (cont)	
	3	S/C: AGS sw - ATT HOLD	Provides followup discrete (attitude hold and ACA out of detent) to AEA and routes +28-vdc enable signal to ATCA abort preamplifiers through contact closure established when GUID CONT sw - AGS.
		ROLL, PITCH, & YAW sw - MODE CONT	Switches route AEA attitude commands to ATCA and enable ATCA gimbal trim commands to be routed to DECA via GUID CONT sw - AGS.
	1	ENG THR CONT: BAL CPL sw - ON	Routes +28-vdc enable signal, provided via S/C: AGS sw - ATT HOLD, to ATCA four up-firing abort preamplifiers. ENG THR CONT: BAL CPL sw - ON during all mission phases, except during APS engine burns. This permits RCS to add to net thrust when under AGS control.
	3	S/C: DEAD BAND sw - MAX or MIN	In MAX position, attitude deadband in roll, pitch, and yaw is 5°. In MIN position, attitude deadband in pitch and roll is 0.3°; in yaw, 0.4°. Minimum deadband is automatically provided during MPS thrusting, as backup to DEAD BAND sw. Attitude rate deadband, when unstaged, is ±0.2°/second (narrow) and ±3.33°/second (wide). Attitude rate deadband, when staged, is ±0.75°/second (narrow) and ±12.5°/second (wide).
	1	ATT/TRANSL sw - 2 JETS or 4 JETS	Selects either two- or four-jet operation for X-translation or pitch and roll attitude maneuvers. When switch is in 4 JETS position, high rate limit cycling can result when LM is in light ascent weight configuration. Switch to 4 JETS position only when failed jets prevent roll, pitch, or X-axis translation.
	1, 2	3. Establish rate command capability: ACA PROP sw (2) - ENABLE	Provides 800-cps power to ACA proportional primary windings.
	ACA	4. ACA - maneuver as desired	Commanded rate is proportional to ACA deflection. Maximum commanded rate is 20°/second.

CREW-MAN	PNL	PROCEDURES	REMARKS
		4.5.1.7 AGS Pulse	Permits manual initiation of angular acceleration commands through low-frequency pulsing of RCS jets by CES on individual-axis basis. In selected axis(es), automatic rate damping and AEA attitude control are lost (open-loop acceleration).
		If all axes are not placed under AGS pulse mode:	
		AGS Power-Up (required)	Ref para 4.6.2.1.
		AGS Checkout (desired)	Ref para 4.6.2.4.
		PGNCS/AGS Align (required)	Ref para 4.9.2.1.
		AGS state vector valid (required)	AGS Initialization Routine (R47) (para 4.6.1.18) or AGS Manual LM State Vector Update/Initialization procedure (para 4.6.2.7) and AGS Manual CSM State Vector Update/ Initialization procedure (para 4.6.2.9). AGS initialization and alignment are required for guidance steering and Z-axis steering, but are not required when LM is holding attitude in AGS automatic mode.
		1. Following are required for AGS pulse control:	
		RCS Primary Coil Enable	Ref para 4.5.1.1.
	16	CB S/C:	
		ATCA - close	Provides d-c power to ATCA power supply.
		ATCA (AGS) - close	Provides d-c power for selecting AGS operation via GUID CONT sw - AGS, bias for ATCA out-of-detent relay, and enable voltage to ATCA abort preamplifiers via S/C: AGS sw - AUTO or ATT HOLD.
		CAUTION	
		To prevent inadvertent RCS jet firing, S/C: AGS sw - OFF before CB S/C: ATCA (AGS) - close.	
		2. Establish AGS pulse control:	
	1	GUID CONT sw - AGS	Sets bank of relays for AGS operation.

CREW-MAN	PNL	PROCEDURES	REMARKS
		4.5.1.7 AGS Pulse (cont)	
	3	S/C: AGS sw - AUTO	If all axes are not wanted under pulse control, remaining axis(es) can be controlled with S/C: AGS sw - AUTO or ATT HOLD. Do not set S/C: AGS sw - OFF. S/C: AGS sw - AUTO provides automatic discrete to AEA and routes enable voltage to ATCA abort preamplifiers through contact closure established when GUID CONT sw - AGS. If AUTO position is selected, guidance steering (X-axis) (address 400+10000) and Z-axis steering (address 400+20000) should not be selected, unless specified by particular procedure. Selection of either steering mode while in AGS automatic mode could result in vehicle attitude rates of 10°/second in all three axes.
		or select:	
		S/C: AGS sw - ATT HOLD	Provides followup discrete (attitude hold and ACA out of detent) to AEA and routes +28-vdc enable signal to ATCA abort preamplifiers through contact closure established when GUID CONT sw - AGS.
		DEAD BAND sw - MAX or MIN	Deadband is not in effect in axis(es) selected for pulse control. Minimum deadband is automatically provided during MPS thrusting. In MAX position, deadband in roll, pitch, and yaw is 5°. In MIN position, deadband in pitch and roll is 0.3°; in yaw, 0.4°.
	1	ENG THR CONT: BAL CPL sw - ON	Routes +28-vdc enable signals, provided via S/C: AGS sw - ATT HOLD or AUTO, to ATCA four up-firing abort preamplifiers. ENG THR CONT: BAL CPL sw - ON during all mission phases, except during APS engine burns. This permits RCS to add to net thrust when under AGS control.
	11	CB S/C: ATT DIR CONT - close	Provides d-c power to S/C: ROLL, PITCH, & YAW sw for direct and pulse mode operation.
	3	S/C: ROLL, PITCH, & YAW sw - PULSE (selectable on individual-axis basis)	Inhibits AEA attitude errors and ACA rate commands to ATCA (selected axis only). Inhibits rate damping (open-loop acceleration in selected axis only). Inhibits routing of ATCA gimbal commands to DECA (selected axis only). Routes ACA pulse commands to ATCA jet logic.

CREW-MAN	PNL	PROCEDURES	REMARKS
		4.5.1.7 AGS Pulse (cont)	
		CAUTION	
		If manual override about any axis (except X-axis when in attitude hold or in guidance steering, or Z-axis when in Z-body-axis steering) is commanded, oscillations can build up in other axes. If this occurs in attitude hold, ACA should be momentarily taken out of detent.	If manual override is required as a backup in one or more axes, with AGS in automatic control, it is assumed that computed attitude errors will be kept near null manually; therefore, oscillation problem will not occur.
	ACA	3. ACA - maneuver as desired	As long as ACA is held 2.5° out of detent, ATCA issues pulse commands of approximately 0.016 second duration at rate of approximately 4.3 pulses/second.
		4.5.1.8 AGS Direct	Permits manual initiation of angular acceleration commands through on-off firing of RCS jets (two-jet operation direct to secondary coils) on individual-axis basis. In selected axis(es), automatic rate damping and AEA attitude control are lost (open-loop acceleration).
		If all axes are not placed under AGS direct mode:	
		AGS Power-Up (required)	Ref para 4.6.2.1.
		AGS Checkout (desired)	Ref para 4.6.2.4.
		RCS Primary Coil Enable (required)	Ref para 4.5.1.1.
		PGNCS/AGS Align (required)	Ref para 4.9.2.1.
		AGS state vector valid (required)	AGS Initialization Routine (R47) (para 4.6.1.18), or AGS Manual LM State Vector Update/Initialization procedure (para 4.6.2.7) and AGS Manual CSM State Vector Update/Initialization procedure (para 4.6.2.9). AGS initialization and alignment are required for guidance steering and Z-axis steering, but are not required when LM is holding attitude in AGS automatic mode.
	16	1. CB S/C:	
		ATCA - close	Provides d-c power to ATCA power supply.
		ATCA (AGS) - close	Provides d-c power for selecting AGS operation via GUID CONT sw - AGS, bias to ATCA out-of-detent relay, and enable voltage for ATCA abort preamplifiers via S/C: AGS sw - AUTO or ATT HOLD.

CREW-MAN	PNL	PROCEDURES	REMARKS
		4.5.1.8 AGS Direct (cont)	
		CAUTION To prevent inadvertent RCS jet firing, S/C: AGS sw - OFF before CB S/C: ATCA & CB S/C: ATCA (AGS) - close	
		2. Establish AGS automatic or attitude hold control (if desired):	Sets bank of relays for AGS operation.
	1	GUID CONT sw - AGS	
	3	S/C: AGS sw - AUTO	If all axes are not wanted under direct control, remaining axis(es) can be controlled with S/C: AGS sw - AUTO or ATT HOLD. Do not set S/C: AGS sw - OFF. S/C: AGS sw - AUTO provides automatic discrete to AEA and routes enable voltage to ATCA abort preamplifiers through contact closure established when GUID CONT sw - AGS. If AUTO position is selected, guidance steering (address 400+10000) and Z-axis steering (address 400+20000) should not be selected, unless specified by particular procedure. Selection of either steering mode while in AGS automatic mode could result in vehicle attitude rates of 10°/second in all three axes.
	3	or select:	
		S/C: AGS sw - ATT HOLD	Provides followup discrete (attitude hold and ACA out of detent) to AEA and routes +28-vdc enable signal to ATCA abort preamplifiers through contact closure established when GUID CONT sw - AGS.
	3	S/C: DEAD BAND sw - MAX or MIN	Deadband is not in effect in axis(es) selected for direct control. Minimum deadband is automatically provided during MPS thrusting. In MAX position, deadband in roll, pitch, and yaw is 5°. In MIN position, deadband in pitch and roll is 0.3°; in yaw, 0.4°.
	1	ENG THR CONT: BAL CPL sw - ON	Routes +28-vdc enable signal, provided by S/C: AGS sw - ATT HOLD or AUTO, to ATCA four up-firing abort preamplifiers. ENG THR CONT: BAL CPL sw - ON during all mission phases, except during APS engine burns. This permits RCS to add to net thrust when under AGS control.
		3. Establish AGS direct control:	
	11	CB S/C: ATT DIR CONT - close	Provides d-c power to S/C: ROLL, PITCH, & YAW sw for direct and pulse mode operation.

CREW-MAN	PNL	PROCEDURES	REMARKS
		4.5.1.8 AGS Direct (cont)	
	3	S/C: ROLL, PITCH, & YAW sw - DIRECT (selectable on individual-axis basis)	Inhibits AEA attitude error and ACA rate commands to ATCA (selected axis only). Inhibits rate damping (open-loop acceleration in selected axis only). Inhibits ATCA gimbal commands to DECA (selected axis only) and routes +28 vdc to DIRECT contact of ACA.
		CAUTION If manual override about any axis (except X-axis when in attitude hold or in guidance steering, or Z-axis when in Z-body-axis steering) is commanded, oscillations can build up in other axes. If this occurs in attitude hold, ACA should be momentarily taken out of detent.	If manual override is required as backup in one or more axes, with AGS in automatic control, it is assumed that computed attitude errors will be kept near null manually; therefore, oscillation problem will not occur.
	ACA	4. ACA - maneuver as desired	As long as ACA is held 2.5° out of detent, RCS jets will fire continuously.
		4.5.1.9 ACA Hardover	Provides override of attitude control by routing CES on-off commands to RCS secondary coils for four-jet operation.
	11	1. CB S/C: ATT DIR CONT - close	Provides 28 vdc to ACA 12° switch (hardover) via ACA/4 JET sw - ENABLE.
	4	2. Establish hardover control: ACA/4 JET sw (CDR/LMP) - ENABLE	Routes 28 vdc to ACA 12° switch (hardover) from CB/SC: ATT DIR CONT.
	ACA	ACA (CDR/LMP) - maneuver as desired	Hardover command is initiated when ACA is moved 12° out of detent (12° switches close) and 28 vdc is routed to RCS secondary coils.
		4.5.2 TRANSLATION CONTROL MODES	
		4.5.2.1 Descent Engine On/Off Control	Provides configuration for starting and stopping descent engine, using PGNCS, AGS, and manual control.
		1. PGNCS control:	
		LGC Power-Up (required)	Ref para 4.6.1.1.
		IMU Power-Up (LGC Operating) (required)	Ref para 4.6.1.3.
		PGNCS Prethrust Program (required)	Ref para 4.7.1 or P63.

CREW-MAN	PNL	PROCEDURES	REMARKS
		4.5.2.1 Descent Engine On/Off Control (cont)	
		a. Eng on:	
	11	CB S/C: DECA PWR - close	Provides d-c power to descent engine-arming and engine-on relays in DECA.
	16	CB S/C: ENG ARM - close	Provides d-c power for automatic engine-on logic and energizes relays for routing arming and engine-on commands via ENG THR CONT: ENG ARM sw - DES.
	11	CB S/C: ATCA (PGNS) - close	Provides d-c power for selecting PGNCS operation via GUID CONT sw - PGNS.
	1	ABORT STAGE pb - reset	Prevents descent engine-on relays from becoming deenergized.
	5, 6	Eng STOP pb/lt - reset	Completes signal path to engine-arming relays from ENG THR CONT: ENG ARM sw - DES.
	1	GUID CONT sw - PGNS	Sets bank of relays required for PGNCS operation and for routing followup signal to AEA.
		ENG THR CONT: ENG ARM sw - DES	Routes d-c power to engine-arming relays through engine STOP pb/lt - reset.
		LGC eng-on command	Issued by LGC after both of following conditions are met: (1) ullage is acknowledged by PRO response to FL V99 (ullage translation is automatic) and (2) nominal ignition time is reached.
		b. Eng off:	
	11	CB S/C: ATCA (PGNS) - close	Provides d-c power for selecting PGNCS operation via GUID CONT sw - PGNS.
	16	CB S/C: ENG ARM - close	Provides d-c power for automatic engine-off logic.

CREW-MAN	PNL	PROCEDURES	REMARKS
		4.5.2.1 Descent Engine On/Off Control (cont)	
	1	GUID CONT sw - PGNS	Sets bank of relays required for automatic engine-off command.
	3	S/C: PGNS sw - AUTO	Provides automatic discrete to LGC and establishes automatic descent engine-off signal path for LGC-generated engine-off commands.
		LGC eng-off command	Issued by LGC when shutoff criteria are reached.
		or select:	
	5, 6	Eng STOP pb/lt - push	Provides backup, manual descent engine-off control by removing descent engine-arming signal.
	1	ENG THR CONT: ENG ARM sw - OFF	
		or select:	
	5, 6	Eng STOP pb/lt - push	
	1	ABORT pb - reset	Removes redundant power and arming signal path to descent engine-arming relays.
		ENG THR CONT: ENG ARM sw - OFF	
		2. AGS control:	
		AGS Power-Up (required)	Ref para 4.6.2.1.
		AGS Prethrust Program (required)	Ref para 4.7.1.
		RCS Translation (required)	Ref para 4.5.2.5. RCS translation required for ullage.
		a. Eng on:	
	11	CB S/C: ENG CONT - close	Provides d-c power to descent engine-arming and engine-on relays in DECA.
	16	CB S/C: ENG ARM - close	Provides d-c power for automatic engine-on logic and energizes relays for routing arming and engine-on commands via ENG THR CONT: ENG ARM sw - DES.
	11	CB S/C: DECA PWR - close	Provides d-c power to descent engine-arming and engine-on relays in DECA

CREW-MAN	PNL	PROCEDURES	REMARKS
		4.5.2.1 Descent Engine On/Off Control (cont)	
	16	CB S/C: ATCA (AGS) - close	Provides d-c power for selecting AGS operation via GUID CONT sw - AGS.
	1	ABORT STAGE pb - reset	Prevents descent engine-on relays from becoming deenergized.
	5, 6	Eng STOP pb/lt - reset	Completes signal path to engine-arming relays when ABORT pb - push or ENG THR CONT: THR CONT sw - DES.
	1	GUID CONT sw - AGS	Sets bank of relays required for AGS operation.
	3	S/C: AGS sw - AUTO	Provides automatic discrete to AEA, required for automatic engine-on command. Automatic DPS and APS engine-off signal path is established.
	1	ABORT pb - push	Provides abort discrete to AEA, required for automatic engine-on command and routes d-c power to engine-arming and engine-on relays.
		ENG THR CONT: ENG ARM sw - DES	Provides redundant d-c power to descent engine-arming and engine-on relays.
		AEA eng-on command	Issued by AEA after manual ullage translation has been performed.
		b. Eng off:	
	16	CB S/C:	
		ENG ARM - close	Provides d-c power for automatic engine-off logic.
		ATCA (AGS) - close	Provides d-c power for selecting AGS operation via GUID CONT sw - AGS.
	1	ABORT pb - push	Provides abort discrete to AEA, which provides automatic off command by AEA.
		GUID CONT sw - AGS	Sets bank of relays required for AGS operation.
	3	S/C: AGS sw - AUTO	Provides automatic discrete to AEA, which provides automatic off command and establishes automatic DPS and APS engine-off signal path for AEA-generated engine-off commands.
		AEA eng-off command	Issued by AEA when shutoff criteria are reached.
	1	ENG THR CONT: ENG ARM sw - OFF	

CREW-MAN	PNL	PROCEDURES	REMARKS
		4.5.2.1 Descent Engine On/Off Control (cont)	
		3. Manual control:	
		a. Eng on:	
	16	CB S/C: ENG ARM - close	Provides d-c power for energizing relays for routing engine-arming and engine-on commands via ENG THR CONT: ENG ARM sw - DES.
	11	CB S/C:	
		ENG START OVRD - close	Provides d-c power for setting manual start relay via eng START pb/lt - push.
		DECA PWR - close	Provides d-c power to descent engine-arming and engine-on relays in DECA.
		ENG CONT - close	Provides d-c power for energizing manual engine-on relays via ENG THR CONT: ENG ARM sw - DES.
	1	ABORT STAGE pb - reset	Prevents descent engine-on command relays from being reset.
	5, 6	Eng STOP pb/lt - reset	Completes signal path to engine-arming relays when ENG THR CONT: ENG ARM sw - DES.
	TTCA	THROTTLE/JETS cont (CDR or LMP) - JETS	Selects X-axis jets.
	1	ENG THR CONT: ENG ARM sw - DES	Routes d-c power to engine-arming relays and to manual start relay.
	TTCA	TTCA (CDR or LMP) - move up	
		or	
	5	+X TRANSL pb - push & hold	Provides required ullage control.
		Eng START pb/lt - push	Momentary pushbutton, which energizes manual descent engine start relays.
		b. Eng off:	
	11	CB S/C: ENG CONT - close	Provides d-c power to manual descent engine stop relay when eng STOP pb/lt - push.
	5, 6	Eng STOP pb/lt - push	Routes d-c power to manual descent engine stop relay and removes d-c power from descent engine-arming relay.
	1	ENG THR CONT: ENG ARM sw - OFF	Provides backup, manual stop by deenergizing manual descent engine start relay.

CREW-MAN	PNL	PROCEDURES	REMARKS
		4.5.2.2 Ascent Engine On/Off Control	Provides configuration for starting and stopping ascent engine, using PGNCS, AGS, and manual control.
		1. PGNCS control:	
		LGC Power-Up (required)	Ref para 4.6.1.1.
		IMU Power-Up (LGC Operating) (required)	Ref para 4.6.1.3.
		PGNCS Prethrust Program (required)	Ref para 4.7.1.
		a. Eng on:	
	11	CB S/C: ATCA (PGNS) - close	Provides d-c power for selecting PGNCS operation via GUID CONT sw - PGNS.
	16	CB S/C: ENG ARM - close	Provides d-c power for automatic engine-on logic and energizes relays for routing arming and engine-on commands via ENG THR CONT: ENG ARM sw - ASC.
		ATCA - close	Provides d-c power to ATCA power supply, which develops power for automatic ascent engine on-off logic.
	11,16	CB S/C: AELD - close	Provides redundant d-c power for engine-on commands.
	5, 6	Eng STOP pb/lt - reset	Completes signal path required for energizing automatic engine-on relays.
	1	GUID CONT sw - PGNS	Sets bank of relays required for PGNCS operation and for routing followup signal to AEA.
		ENG THR CONT: ENG ARM sw - ASC	Routes d-c power to engine-arm relays.
		LGC eng-on command	Issued by LGC after both of following conditions are met: (1) ullage is acknowledged by PRO response to FL V99 (ullage translation is automatic) and (2) nominal ignition time is reached.
		b. Eng off:	
	16	CB S/C: ENG ARM - close	Provides d-c power for automatic engine-off logic.
	11	CB S/C: ATCA (PGNS) - close	Provides d-c power for selecting PGNCS operation via GUID CONT sw - PGNS.
	1	GUID CONT sw - PGNS	Sets bank of relays required for PGNCS automatic engine-off command.

G & REF MODE

CREW-MAN	PNL	PROCEDURES	REMARKS
		4.5.2.2 Ascent Engine On/Off Control (cont)	
	3	S/C: PGNS sw - AUTO	Provides automatic discrete to LGC and establishes signal path for LGC-generated engine-off commands.
		LGC eng-off command	Issued by LGC when shutoff criteria are reached.
	1	ENG THR CONT: ENG ARM sw - OFF	Removes backup arming function and issues ascent engine stop discrete to ascent engine.
		2. AGS control:	
		AGS Power-Up (required)	Ref para 4.6.2.1.
		AGS Prethrust (required)	Ref para 4.7.1.
		RCS Translation (required)	Ref para 4.5.2.5. RCS translation required for ullage.
		a. Eng on:	
	16	CB S/C: ENG ARM - close	Provides d-c power for automatic ascent engine-on logic and energizes automatic engine-on relays via ENG THR CONT: ENG ARM sw - ASC.
		ATCA - close	Provides d-c power to ATCA power supply, which develops power for automatic ascent engine on-off logic.
	11 16	CB ED: LOGIC A - close CB ED: LOGIC B - close	Provides d-c power for APS pressurization and staging sequence relays when ABORT STAGE pb - push.
	11,16	CB S/C: AELD - close	Provides redundant d-c power for engine-on commands.
	16	CB S/C: ATCA (AGS) - close	Provides d-c power for selecting AGS operation via GUID CONT sw - AGS.
	11,16	CB S/C: ABORT STAGE - close	Provides d-c power for arming relays and abort stage discrete relays when ABORT STAGE pb - push.
	5, 6	Eng STOP pb/lt - reset	Completes signal path required for energizing automatic engine-on relays.
	1	GUID CONT sw - AGS	Sets bank of relays required for AGS operation.

CREW-MAN	PNL	PROCEDURES	REMARKS
		4.5.2.2 Ascent Engine On/Off Control (cont)	
	3	S/C: AGS sw - AUTO	Provides automatic discrete to AEA, required for issuance of automatic engine-on command. Automatic DPS and APS engine-off signal path is established.
	1	ABORT STAGE pb - push	Routes d-c power to arming and abort stage discrete relays. Abort stage discrete to AEA is required for automatic engine-on command.
		ENG THR CONT: ENG ARM sw - ASC	Provides redundant d-c power to ascent engine-arming relay.
		AEA eng-on command	Issued by AEA after manual ullage translation has been performed.
		b. Eng off: CB S/C: ABORT STAGE - close	Provides redundant power to abort stage discrete relays when ABORT STAGE pb - push. Abort stage discrete is required by AEA to issue automatic engine-off command.
	16	CB S/C: ENG ARM - close	Provides d-c power for automatic engine-off logic.
		ATCA (AGS) - close	Provides d-c power for selecting AGS operation via GUID CONT sw - AGS.
	1	ABORT STAGE pb - push	Provides abort stage discrete to AEA, required for automatic engine-off command.
		GUID CONT sw - AGS	Sets bank of relays required for AGS operation.
	3	S/C: AGS sw - AUTO	Provides automatic discrete to AEA, required for AEA automatic engine-off command, and establishes automatic DPS and APS engine-off signal path for AEA-generated engine-off commands.
		AEA eng-off command	Issued by AEA when shutoff criteria are reached.
	1	ENG THR CONT: ENG ARM sw - OFF	Removes d-c power to arming and abort stage discrete relays.
		ABORT STAGE pb - reset	

CREW-MAN	PNL	PROCEDURES	REMARKS
		4.5.2.2 Ascent Engine On/Off Control (cont)	
		3. Manual control:	
		a. Eng on:	
	11,16	CB S/C: AELD - close	Provides redundant d-c power for engine-on commands.
	11	CB S/C: ENG START OVRD - close	Provides d-c power for ascent engine-arming and start relays via ENG THR CONT: ENG ARM sw - ASC.
	5, 6	Eng STOP pb/lt - reset	Prevents ascent engine-arming and start relays from being reset.
	1	ENG THR CONT: ENG ARM sw - ASC	Routes d-c power to ascent engine-arming and start relays.
	5	Eng START pb/lt - push	Momentary pushbutton, which energizes arming and start relays.
	11	b. Eng off: CB S/C: ENG CONT - close	Provides d-c power for energizing relay that resets manual arming and start relays.
	5, 6	Eng STOP pb/lt - push	Removes engine-on command by routing d-c power to relay that resets manual arming and start relays.
	1	ENG THR CONT: ENG ARM sw - OFF	Provides backup, manual stop command by deenergizing start relays.
		4.5.2.3 Descent Engine Throttle Control	Establishes configuration for PGNCS (automatic and manual) and AGS (manual only) throttling control of descent engine and provides steps for switching from automatic to manual and from manual to automatic throttling control.
		1. PGNCS control:	
		a. Automatic throttling: LGC Power-Up (required)	Ref para 4.6.1.1.

CREW-MAN	PNL	PROCEDURES	REMARKS
		4.5.2.3 Descent Engine Throttle Control (cont)	
	16	CB S/C: ATCA - close ENG ARM - close	Provides d-c power to ATCA power supply, which develops power for automatic throttling circuits.
	11	CB/AC BUS A: DECA GMBL - close	
		Establish PGNCS automatic throttling control:	
	1	GUID CONT sw - PGNS	Sets relays for PGNCS operation.
	3	S/C: PGNS sw - AUTO	
	1	ENG THR CONT: THR CONT sw - AUTO	Routes automatic thrust discrete to LGC and permits automatic throttling commands from LGC to be routed to throttle valve actuator assembly. With ENG THR CONT: THR CONT sw - AUTO, manual commands from TTCA's may also be routed to throttle valve actuator. Manual command voltage will be added to automatic command voltage in descent engine throttle actuator; resultant effective command voltage will be sum of two voltages.
		b. Manual throttling:	
	11	CB PGNS: IMU OPR - close CB FLT DISP: THRUST - close	Provides d-c power to PSA, which develops 28v, 800 cps, for TTCA throttling excitation.
	16	CB S/C: ATCA - close	Provides d-c power to ATCA power supply, which develops power for manual throttling circuits.
		Following provides backup d-c power to manual throttling circuits: CB S/C: ENG ARM - close	Provides d-c power for energizing automatic engine-on relays.
	1	ABORT pb - reset	Completes return path to CB S/C: ENG ARM.
		ENG THR CONT: ENG ARM sw - DES	Routes 28-vdc power to energize arming relays, which route 400-cps power to DECA auxiliary power supply.
	11	CB/AC BUS A: DECA GMBL - close	Provides 400-cps power to DECA auxiliary power supply, which provides backup voltage for manual throttling circuits.
	1	Establish PGNCS manual throttling contol: GUID CONT sw - PGNS	Routes 800-cps power from PSA to TTCA.

LM 3231

CREW-MAN	PNL	PROCEDURES	REMARKS
		4.5.2.3 Descent Engine Throttle Control (cont)	
		ENG THR CONT: MAN THROT sw - CDR or SE	Provides manual throttling control authority to CDR or LMP and routes 800-cps power to TTCA and to manual throttling circuits.
	TTCA	THROTTLE/JETS cont (CDR and/or LMP) - THROTTLE	Enables TTCA throttling capability.
		Throttle friction cont (CDR/LMP) - adjust as desired	Each control varies force required to move associated TTCA in +X-direction. They are operative only when associated THROTTLE/JETS cont - THROTTLE. Force required to move TTCA varies from 0.25 to 1 pound (minimum force) to 2.5 to 3.5 pounds (maximum force).
	1	ENG THR CONT: THR CONT sw - MAN	Permits crew to monitor manual throttling commands on CMD THRUST ind and removes automatic throttling commands.
	TTCA	TTCA (CDR/LMP) - move as desired	Throttle control varies from 10% to 92.5% (based upon 100% = 10,500-pound thrust), with capability of selective throttling from 10% to 65%.
		CAUTION Operation in transient region (65% to 92.5%) causes excessive eng erosion. Rough combustion may be expected at start of DPS burns, due to gas ingestion in propellants. Roughness can last as long as 25 sec, depending on how quickly eng is throttled up. There is no constraint on throttling due to this roughness.	
		c. Automatic to manual throttle switchover:	
	11	CB FLT DISP: THRUST - close	Assumption: DPS automatic throttle control was initiated. Switchover procedure is required to attain smooth transition in throttling authority.
		Establish configuration for PGNCS manual throttle control, except as follows:	
	1	ENG THR CONT: THR CONT sw - AUTO	
	TTCA	TTCA (CDR/LMP) - slowly increase throttle command	As TTCA thrust command is increased (when LGC thrust commands are in throttlable region), every 2 seconds in P63, and P64, and every 1 second in P66, LGC commands decrease correspondingly so that effective thrust level is returned to desired level. Avoid unnecessary operation in region from 65% to 92.5%.

CREW-MAN	PNL	PROCEDURES	REMARKS
		4.5.2.3 Descent Engine Throttle Control (cont)	
	1	CMD & ENG THRUST ind - monitor When thrust = 10% & eng pressures show slight increase: ENG THR CONT: THR CONT sw - MAN	Due to internal bias, CMD THRUST ind cannot read less than 10%. Full manual authority is established when ENG THRUST ind remains at increase in response to TTCA increase. Only at this point can ENG THR CONT: THR CONT sw be set to MAN without subjecting DPS to minus Δ thrust command. ENG THR CONT: THR CONT sw - MAN removes automatic throttling commands and permits crew to monitor manual throttling commands on CMD THRUST ind. Automatic DPS shutdown is still enabled.
	TTCA	TTCA - adjust thrust level as desired	
		d. Manual to automatic throttling switchover: Establish configuration for PGNCS automatic throttling control:	Assumption: DPS manual throttling mode was initiated. When ENG THR CONT: THR CONT sw - AUTO, LGC may command thrust level greater than existing thrust level.
		TTCA - slowly decrease to minimum thrust position	Gradually decrease TTCA to minimum position. LGC will increase thrust commands correspondingly (when LGC thrust commands are in throttlable region) at 2-second intervals for P63, and P64 and 1-second intervals for P66 if existing thrust level is to be maintained. Under automatic throttling control, thrust level cannot be less than that commanded by TTCA. If manual DPS start was used, manual DPS shutdown is required.
		CAUTION Operation in transient region (65% to 92.5%) causes excessive eng erosion. Rough combustion may be expected at start of DPS burns, due to gas ingestion in propellants. Roughness can last as long as 25 sec, depending on how quickly eng is throttled up. There is no constraint on throttling due to this roughness.	

CREW-MAN	PNL	PROCEDURES	REMARKS
		4.5.2.3 Descent Engine Throttle Control (cont)	
		2. AGS control (manual throttling only):	
	16	CB S/C: ATCA - close	Provides d-c power to ATCA power supply, which develops a-c and d-c power for manual throttling circuits.
		Following provides backup d-c power to manual throttling circuits:	
		CB S/C: ENG ARM - close	Provides d-c power for energizing engine-arming relays.
	1	ABORT pb - reset	Completes return path to CB S/C: ENG ARM.
		ENG THR CONT: ENG ARM sw - DES	Routes 28-vdc power to energize relay, which routes 400-cps power to DECA auxiliary power supply.
	11	CB/AC BUS A: DECA GMBL - close	Furnishes 400-cps power to DECA auxiliary power supply, which provides backup voltage for manual throttling circuits.
		Establish AGS manual throttling control:	
	1	GUID CONT sw - AGS	Routes 800-cps power from ATCA power supply to TTCA.
		ENG THR CONT: MAN THROT sw - CDR or SE	Provides manual throttle control authority to CDR or LMP and routes 800-cps power to ATCA and to manual throttling circuits.
	TTCA	THROTTLE/JETS cont (CDR/LMP) - THROTTLE	Enables TTCA throttling capability.
		Throttle friction cont (CDR/LMP) - adjust as desired	Each control varies force required to move associated TTCA in +X-direction. They are operative only when associated THROTTLE/JETS cont - THROTTLE. Force required to move TTCA varies from 0.25 to 1 pound (minimum force) to 2.5 to 3.5 pounds (maximum force).
	1	ENG THR CONT: THR CONT sw - MAN	Permits crew to monitor manual throttle commands on CMD THRUST ind and removes automatic throttle commands.
	TTCA	TTCA (CDR/LMP) - move as desired	Throttle control varies from 10% to 92.5% (based upon 100% = 10,500-pound thrust), with capability of selective

CREW-MAN	PNL	PROCEDURES	REMARKS
		4.5.2.3 Descent Engine Throttle Control (cont)	
		CAUTION Operation in transient region (65% to 92.5%) causes excessive eng erosion. Rough combustion may be expected at start of DPS burns due to gas ingestion in propellants. Roughness can last as long as 25 sec, depending on how quickly eng is throttled up. There is no constraint on throttling due to this roughness.	throttling from 10% to 65%. Thrust changes from 65% to 92.5%, or from 92.5% to 65%, are not selected under normal conditions.
		4.5.2.4 GDA Enable	Establishes configuration for enabling pitch and roll gimbal drive assembly and associated failure-detection circuitry. Assumption: LGC gimbal commands or ATCA gimbal commands are present.
	11	1. CB/AC BUS A: DECA GMBL - close	Provides 115v, 400-cps power for GDA pitch and roll transducer and to DECA internal circuits.
		CB S/C: DECA PWR - close	Provides d-c power for energizing GDA relay coils.
	16	CB S/C: ENG ARM - close	Provides d-c power for energizing arming relays.
	1	ABORT pb - reset	Completes return path to CB S/C: ENG ARM.
		ENG THR CONT: ENG ARM sw - DES	Routes 28-vdc power to energize relays, which route a-c and d-c power to GDA circuits.
		or select:	
	11	CB S/C: ENG CONT - close	Provides d-c power for energizing relays.
	1	ABORT pb - push	Routes 28-vdc power to energize relays, which route a-c and d-c power to GDA circuits.
	3	2. ENG GMBL sw - ENABLE	Enables 400-cps power to GDA pitch and roll switches.

LM 3231

CREW-MAN	PNL	PROCEDURES	REMARKS
		4.5.2.5 RCS Translation	Establishes configuration for initiating PGNCS or AGS manual translation maneuvers and +X-axis translation override control.
		1. PGNCS manual translation control:	
		LGC Power-Up (required)	Ref para 4.6.1.1.
		IMU Power-Up (required)	Ref para 4.6.1.3. CB PGNS: IMU OPR also supplies d-c power to PSA, which develops 28v, 800 cps, for ACA proportional excitation.
		DAP Data Load Routine (required)	Ref para 4.6.1.8. This routine establishes two- or four-jet X-axis translation.
		RCS Primary Coil Enable (required)	Ref para 4.5.1.1.
	11	CB S/C: ATCA (PGNS) - close	Provides d-c power for selecting PGNCS operation via GUID CONT sw - PGNS, bias voltage to ATCA, out-of-detent relay power, and enable voltage to ATCA primary preamplifiers via S/C: PGNS sw - AUTO or ATT HOLD.
		CAUTION To prevent inadvertent RCS jet firing, S/C: PGNS sw - OFF before CB S/C: ATCA (PGNS) - close.	
	1	Establish PGNS translation control: GUID CONT sw - PGNS	Sets bank of relays for PGNCS operation. When LM configuration includes heavy descent stage (PGNS in control), Y- and Z axis translations, when commanded, should be performed sequentially to avoid loss of vehicle attitude control. Word "heavy" is referenced to both ascent and descent propellent loading conditions.
	3	S/C: PGNS sw - AUTO or ATT HOLD	Routes 28-vdc enable signal to ATCA primary preamplifiers.
	4	TTCA/TRANSL sw (CDR/LMP) - ENABLE	Routes X-, Y-, or Z-axis translation command discrete to LGC when TTCA is actuated.

CREW-MAN	PNL	PROCEDURES	REMARKS
		4.5.2.5 RCS Translation (cont)	
	TTCA	THROTTLE/JETS cont (CDR/LMP) - JETS TTCA - move in desired direction of thrust	Enables TTCA X-axis translation capability.
		If docked & attitude control lost: TTCA - release until attitude error in deadband	Steady Y-command or Z-command producers more pitch or roll torque than can be controlled by RCS jets.
		If heavy descent stage or docked & ΔVY or ΔVZ required, reorient & translate along X-axis.	Y- or Z-axis translation consumes double theoretical minimum RCS propellant because significant pitch or roll torquing is required to balance remote center of mass.
		2. AGS manual translation control:	
		RCS Primary Coil Enable (required)	Ref para 4.5.1.1.
	16	CB S/C: ATCA - close	Provides d-c power to ATCA power supply.
		ATCA (AGS) - close	Provides d-c power for selecting AGS operation via GUID CONT sw - AGS, bias for ATCA out-of-detent relay, and enable voltage to ATCA abort preamplifiers via S/C: AGS sw - AUTO or ATT HOLD.
		CAUTION To prevent inadvertent RCS jet firing, S/C: AGS sw - OFF before CB S/C: ATCA (AGS) - close.	
	1	Establish AGS translation control: GUID CONT sw - AGS	If GUID CONT sw - AGS and S/C: AGS sw - AUTO, AEA may steer LM. Set DEDA address 400+00000 (attitude hold); or initialize flight program properly, including a valid LM state vector and PGNCS/AGS alignment. Observe proper attitude hold restrictions before AGS orientation to initial computed steering attitude. Ref para 4.6.2.13.
	3	S/C: AGS sw - AUTO or ATT HOLD	Routes 28-vdc enable signal to ATCA abort preamplifiers.

CREW-MAN	PNL	PROCEDURES	REMARKS
		4.5.2.5 RCS Translation (cont)	
	1	ENG THR CONT: BAL CPL sw - ON	Routes 28-vdc enable voltage, via S/C: AGS sw - ATT HOLD or AUTO, to ATCA four up-firing abort preamplifiers. ENG THR CONT: BAL CPL sw - ON during all mission phases, except during APS engine burns. This permits RCS to add to net engine thrust, if under AGS control.
	4	TTCA/TRANSL sw (CDR/LMP) - ENABLE	Routes X-, Y-, or Z-axis translation commands to ATCA when TTCA is actuated.
	TTCA	THROTTLE/JETS cont (CDR/LMP) - JETS	Enables TTCA X-axis translation capability.
	1	ENG THR CONT: ATT/TRANSL sw - 4 JETS or 2 JETS	Selects four- or two-jet X-axis translation. When switch is in 4 JETS position, high rate limit cycling can result when LM is in light ascent weight configuration. Switch to 4 JETS position only when failed jets prevent roll, pitch, or X-axis translation.
	TTCA	TTCA (CDR/LMP) - move in desired direction of thrust	
		3. +X-axis translation override control:	Provides four-jet +X-axis translation via RCS secondary coils.
	11	CB S/C: ATT DIR CONT - close	Provides +28 vdc to +X TRANSL pb for energizing RCS secondary coils.
	5	+X TRANSL pb - push & hold (continuous firing); push & release (short bursts)	Routes +28 vdc to secondary coils of jets B1D, A2D, B3D, and A4D. Jets fire continuously as long as pushbutton is pushed. If pushbutton fails closed, CB S/C: ATT DIR CONT - open; this prevents use of all secondary coils.
		4.5.3 DYNAMIC DISPLAY MODES	
		4.5.3.1 PGNCS Total Attitude Display	
		1. Inertial display:	Displays PGNCS total attitude data (inertial) on CDR and/or LMP FDAI. First line of each step gives configuration for CDR FDAI; second line, configuration for LMP FDAI.

CREW-MAN	PNL	PROCEDURES	REMARKS
		4.5.3.1 PGNCS Total Attitude Display (cont)	
		a. Power up FDAI:	
	11	CB/AC BUS A: CDR FDAI - close	
		CB/AC BUS B: SE FDAI - close	Provides a-c power to FDAI sphere drive system.
		CB FLT DISP: CDR FDAI - close	
	16	CB FLT DISP: EVNT TMR/SE FDAI - close	Provides d-c power to FDAI and to parts of auxiliary relay switching box.
		b. Power up GASTA:	
	11	CB/AC BUS A: GASTA - close	Applicable to both FDAI's for PGNCS total attitude display. Provides a-c power to GASTA.
		CB FLT DISP: GASTA - close	Applicable to both FDAI's for PGNCS total attitude display. Provides d-c power to GASTA.
		c. Select display configuration:	
	1, 2	ATTITUDE MON sw (2) - PGNS	Routes PGNCS roll and yaw attitude to both FDAI's; pitch attitude, to ORDEAL assembly.
		ORDEAL: FDAI 1 sw - INRTL FDAI 2 sw - INRTL	Bypasses ORDEAL resolvers and routes PGNCS pitch attitude directly to both FDAI's.
		2. ORDEAL:	Displays PGNCS total attitude data (orbital rate) on CDR and/or LMP FDAI. Only pitch axis is affected. First line of each step gives configuration for CDR FDAI; second line, configuration for LMP FDAI.
		a. Power up FDAI:	
	11	CB/AC BUS A: CDR FDAI - close	Provides a-c power to FDAI sphere drive system.
		CB/AC BUS B: SE FDAI - close	
		CB FLT DISP: CDR FDAI - close	Provides d-c power to FDAI and to parts of auxiliary relay switching box.
	16	CB FLT DISP: EVNT TMR/SE FDAI - close	
		b. Power up GASTA:	
	11	CB/AC BUS A: GASTA - close	Applicable to both FDAI's for PGNCS ORDEAL display mode. Provides a-c power to GASTA.
		CB FLT DISP: GASTA - close	Applicable to both FDAI's for PGNCS ORDEAL display mode. Provides d-c power to GASTA.

LM 3231

CREW-MAN	PNL	PROCEDURES	REMARKS
		4.5.3.1 PGNCS Total Attitude Display (cont)	
		c. Power up ORDEAL:	
		CB/AC BUS B: ORDEAL - close	Provides a-c power to ORDEAL resolvers.
		CB FLT DISP: ORDEAL - close	Provides d-c power to ORDEAL assembly.
		ORDEAL:	
		EARTH/LUNAR sw - EARTH or LUNAR	Routes a-c and d-c power to ORDEAL assembly. Provides proper orbital rate scaling.
		LTG sw - BRT or DIM	Controls brightness of ORDEAL EL panel lighting.
		d. Select display configuration:	
	1,2	ATTITUDE MON sw (2) - PGNS	Routes PGNCS roll and yaw attitude to both FDAI's; pitch attitude, to ORDEAL assembly.
		ORDEAL:	Routes pitch attitude to ORDEAL resolvers, then to FDAI's.
		FDAI 1 sw - ORB RATE	
		FDAI 2 sw - ORB RATE	
		4.5.3.2 PGNCS Attitude Rate/Error Display	Displays PGNCS attitude rate/error data with roll, pitch, and yaw rate/error needles of CDR and/or LMP FDAI. Error-needle scaling is set at ±5°. Rate needle scaling is set at 1.25°/second full scale. First line of each step gives configuration for CDR FDAI; second line, configuration for LMP FDAI.
		1. Power up FDAI:	
	11	CB FLT DISP: CDR FDAI - close	
	16	CB FLT DISP: EVNT TMR/SE FDAI - close	Provides d-c power to FDAI and to parts of auxiliary relay switching box.
		1A. Enable DAP: S/C: PGNS sw - ATT HOLD or AUTO	Enables digital autopilot computations.
		1B. Deleted.	
		2. Select displya configuration:	
	1,2	ATTITUDE MON sw (2) - PGNS	Routes LGC attitude rate/error signals to roll, pitch, and yaw rate/error needles of both FDAI's when RATE/ERR MON sw - LDG RDR/CMPTR.
			Completes signal path for routing LGS attitude rate/error to FDAI rate/error needles.
		RATE/ERR MON sw (2) - LDG RDR/CMPTR	V60 rate displays will be incorrect if PGNS is not actually controlling.
		Key V60E for LGC attitude rate display	

CREW-MAN	PNL	PROCEDURES	REMARKS
		4.5.3.2 PGNCS Attitude Rate/Error Display (cont)	
		or Key V61E for mode I attitude error display or Key V62E for mode II attitude error display	Mode I - DAP following errors. Mode II - total attitude errors with respect to N22 angles (gimbal angles; display is scale limited). Mode II is automatically selected by LGC program and routine (such as R60).
		4.5.3.3 AGS Total Attitude Display	Displays AGS total attitude data (inertial) on CDR and/or LMP FDAI. First line of each step gives configuration for CDR FDAI; second line, configuration for LMP FDAI.
		1. Inertial display:	
	11	a. Power up FDAI: CB/AC BUS A: CDR FDAI - close CB/AC BUS B: SE FDAI - close CB/AC BUS B: AGS - close CB FLT DISP: CDR FDAI - close CB FLT DISP: EVNT TMR/SE FDAI - close	 Provides a-c power to FDAI sphere drive system. Applies a-c power for FDAI drive signals from AEA. Provides d-c power to FDAI and to parts of auxiliary relay switching box.
	16		
	1,2	b. Select display configuration: ATTITUDE MON sw (2) - AGS	 Routes AGS roll and yaw attitude to both FDAI's; pitch attitude, to ORDEAL assembly.
		ORDEAL: FDAI 1 sw - INRTL FDAI 2 sw - INRTL	Bypasses ORDEAL resolvers and routes AGS pitch attitude directly to both FDAI's.
		2. ORDEAL (local horizontal attitude):	Displays AGS total attitude data (orbital rate) on CDR and/or LMP FDAI. Only pitch axis is affected. First line of each step gives configuration for CDR FDAI; second line, configuration for LMP FDAI.
	11	a. Power up FDAI: CB/AC BUS A: CDR FDAI - close CB/AC BUS B: SE FDAI - close CB/AC BUS B: AGS - close CB FLT DISP: CDR FDAI - close CB FLT DISP: EVNT TMR/SE FDAI - close	 Provides a-c power to FDAI sphere drive system. Applies a-c power for FDAI drive signals from AEA. Provides d-c power to FDAI and to parts of auxiliary relay switching box.
	16		
	11	b. Power up ORDEAL: CB/AC BUS B: ORDEAL - close	 Provides a-c power to ORDEAL resolvers.

CREW-MAN	PNL	PROCEDURES	REMARKS
		4.5.3.3 AGS Total Attitude Display (cont)	
		CB FLT DISP: ORDEAL - close	Provides d-c power to ORDEAL assembly.
		ORDEAL: EARTH/LUNAR sw - EARTH or LUNAR	Routes a-c and d-c power to ORDEAL assembly. Provides proper orbital rate scaling.
		LTG sw - BRT or DIM	Controls brightness of ORDEAL EL panel lighting.
	1,2	c. Select display configuration: ATTITUDE MON sw - AGS	Routes AGS roll and yaw attitude to FDAI; pitch attitude, to ORDEAL assembly.
		ORDEAL: FDAI 1 sw - ORB RATE FDAI 2 sw - ORB RATE	Routes pitch attitude to ORDEAL resolvers, then to FDAI.
		4.5.3.4 AGS Attitude Error Display	Displays AGS attitude error data with roll, pitch, and yaw error needles of CDR and/or LMP FDAI. First line of each step gives configuration for CDR FDAI; second line, configuration for LMP FDAI.
	11 16	1. Power up FDAI: CB FLT DISP: CDR FDAI - close CB FLT DISP: EVNT TMR/SE FDAI - close	Provides d-c power to FDAI and to parts of auxiliary relay switching box.
	3	2. Select display range: S/C: DEAD BAND sw - MAX or MIN	Provides FDAI error-needle scaling of ±14.4° (maximum) or ±1.7° (minimum).
	1,2	3. Select display configuration: ATTITUDE MON sw (2) - AGS	Routes AGS attitude error signals to roll, pitch, and yaw error needles of both FDAI's when RATE/ERR MON sw - LDG RDR/CMPTR.
		RATE/ERR MON sw (2) - LDG RDR/CMPTR	Completes signal path for routing AGS attitude errors to both FDAI error needles.
		4.5.3.5 Attitude Rate Display	Displays rate gyro assembly data on FDAI roll, pitch, and yaw rate ind. This display mode is independent of PGNCS and AGS operation. First line of each step gives configuration for CDR FDAI; second line, configuration for LMP FDAI.

CREW-MAN	PNL	PROCEDURES	REMARKS
		4.5.3.5 Attitude Rate Display (cont)	
		1. Power up FDAI:	
	11	CB FLT DISP: CDR FDAI - close	Provides d-c power to FDAI and to parts of auxiliary relay switching box.
	16	CB FLT DISP: EVNT TMR/SE FDAI - close	
		2. Select display range:	
	1	RATE SCALE sw - 25°/SEC or 5°/SEC	Applicable to rate indicator on both FDAI's. Selects 25°/sec or 5°/sec full scale for rate indicator.
		4.5.3.6 RR Shaft Angle/Trunnion Angle Display	Displays RR 1X resolver trunnion angles with pitch and yaw error needles of CDR and/or LMP FDAI. First line of each step gives configuration for CDR FDAI; second line, configuration for LMP FDAI.
		1. Power up FDAI:	
	11	CB FLT DISP: CDR FDAI - close	Provides d-c power to FDAI and to parts of auxiliary relay switching box.
	16	CB FLT DISP: EVNT TMR/SE FDAI - close	
		2. Select display range:	
	1	SHFT/TRUN ∡ sw - ±50° or ±5°	Provides scaling for both FDAI's. Set to ±50°, full-scale deflection of FDAI pitch and yaw error needles indicates shaft and trunnion angles of +50° or -50°, or greater. Set to ±5°, full-scale deflection of FDAI pitch and yaw error needles indicates shaft and trunnion angles of +5° or -5°, or greater.
		3. Select display source:	
	1,2	RATE/ERR MON sw - RNDZ RADAR	Routes shaft and trunnion angles from RR to pitch and yaw error needles of both FDAI's. Establishes RR azimuth rate/elevation rate display mode (para 4.5.3.7).

CREW-MAN	PNL	PROCEDURES	REMARKS
		4.5.3.7 RR Azimuth Rate/Elevation Rate Display	Displays RR LOS azimuth and elevation rates on CDR and/or LMP X pointer ind. First line of each step gives configuration for CDR X pointer ind; second line, configuration for LMP X pointer ind.
		1. Power up X pointer ind:	
	11	CB FLT DISP: CDR X PNTR - close	Provides d-c power to both X pointer ind and to parts of auxiliary relay switching box.
	16	CB FLT DISP: SE X PNTR - close	
		2. Select display range:	
	1,3	X POINTER SCALE sw (2) - HI MULT or LO MULT	Set to HI MULT, provides display scale of ±20 mrad/second. Set to LO MULT, illuminates X.1 multiplier and provides scale of ±2 mrad/sec.
		3. Select display source:	
	1,2	RATE/ERR MON sw (2) - RNDZ RADAR	Routes azimuth and elevation rates to X pointer ind and illuminates AZ RT and ELEV RT on X pointer ind.
		4.5.3.8 Forward Velocity/Lateral Velocity Display	Displays forward and lateral velocity on CDR and/or LMP X pointer ind. First line of each step gives configuration for CDR X pointer ind; second line, configuration for LMP X pointer ind.
		1. Power up X pointer ind:	
	11	CB FLT DISP: CDR X PNTR - close	Provides d-c power to both X pointer ind and to parts of auxiliary relay switching box.
	16	CB FLT DISP: SE X PNTR - close	
		2. Select display range:	
	1,3	X POINTER SCALE sw (2) - HI MULT or LO MULT	Set to HI MULT, illuminates X10 multiplier on X pointer ind and provides display scale of ±200 fps. Set to LO MULT, provides display scale of ±20 fps.
		3. Select display configuration:	
	1,2	RATE/ERR MON sw - LDG RDR/CMPTR	Routes forward and lateral velocity data to X pointer ind.
	1	MODE SEL sw - LDG RADAR or PGNS or AGS	Set to LDG RADAR routes forward and lateral velocity data to one or both X pointer ind. Set to PGNS, routes LGC-computed forward and lateral velocity to X pointer ind. Set to AGS, routes AEA-computed lateral velocity to X pointer ind.

LM 3231

CREW-MAN	PNL	PROCEDURES	REMARKS
		4.5.3.8 Forward Velocity/Lateral Velocity Display (cont)	Lateral Velocity displayed on X pointer ind will not be the same for PGNCS and AGS. PGNCS outputs minus velocity for velocity along LM +Y-body-axis; AGS outputs plus velocity for velocity in direction of CSM angular momentum vector.
		4.5.3.9 Altitude/Altitude Rate Display	Displays altitude and altitude rate data on ALT & ALT RATE ind. Display ranges are as follows: Altitude - 0 to 60,500 feet Altitude rate - ± 700 fps
1.		Power up ALT & ALT RATE ind:	
	11	CB/AC BUS A: RNG/RNG RT - close	Provides a-c power to ALT and ALT RATE ind.
		CB FLT DISP: RNG/RNG RT - close	Provides d-c power to ALT and ALT RATE ind.
		2. Select display configuration:	
	1	RNG/ALT MON sw - ALT/ALT RT	Routes data from source selected with MODE SEL sw to ALT and ALT RATE ind.
		MODE SEL sw - LDG RADAR or PGNS or AGS	Set to LDG RADAR, routes LR altitude and altitude rate data to ALT and ALT RATE ind. Set to PGNS, routes LGC-computed altitude and altitude rate data to ALT and ALT RATE ind. Set to AGS, routes AEA-computed altitude and altitude rate data to ALT and ALT RATE ind.
		4.5.3.10. Range/Range Rate Display	Displays range and range rate data on RANGE and RANGE RATE ind. Display ranges are as follows: Range - 0 to 400 nm Range rate - 0 to ±700 fps Range rate is limited by display hardware. Range rate reading of 100 fps can mean rate of 100, 1100, 2100, etc., fps. Also, if rate is between 701 and 999 fps, 1700 and 1999 fps, etc., display will read 700 fps and recycle to zero when rate becomes 1000 fps, 2000 fps, etc

CREW-MAN	PNL	PROCEDURES	REMARKS
		4.5.3.10 Range/Range Rate Display (cont)	
	11	1. Power up RANGE & RANGE RATE ind: CB/AC BUS A: RNG/RNG RT - close	Provides a-c power to RANGE and RANGE RATE ind.
		CB FLT DISP: RNG/RNG RT - close	Provides d-c power to RANGE and RANGE RATE ind.
	1	2. Select display source: RNG/ALT MON sw - RNG/RNG RT	Routes RR range and range rate data to RANGE and RANGE RATE ind.
		4.5.3.11 Thrust Display	Displays engine and commanded thrust levels. Scaling is 0% to 100% in 5% increments.
	11	1. Power up ENG THRUST & CMD THRUST ind: CB FLT DISP: THRUST - close	Provides d-c power to ENG THRUST and CMD THRUST ind.
		2. Select display source:	Engine thrust level is displayed regardless of setting of ENG THR CONT: THR CONT sw.
	1	a. Display automatic thrust commands: ENG THR CONT: THR CONT sw - AUTO	Routes accumulated LGC throttling commands from DECA to CMD THRUST ind.
	11	b. Display manual thrust commands: CB S/C: ENG CONT - close	Provides d-c power for energizing relay, which routes manual thrust commands to ENG THRUST and CMD THRUST ind.
	1	ENG THR CONT: THR CONT sw - MAN	Routes manual thrust commands from TTCA (CDR or LMP) to CMD THRUST ind. Following DSKY display is available during powered landing, to support manual throttle operations. (Automatic command is not available for display on CMD THRUST ind during manual throttle.) V16 N92E R1 Desired auto throttle XXXXX% (may be >100% of FTP thrust) R2 H rate XXXX.X fps R3 H XXXXX ft

CREW-MAN	PNL	PROCEDURES	REMARKS
		4.5.3.12 Radar Signal Strength Display	Displays LR and RR test and flight data on RADAR: SIGNAL STRENGTH ind.
	11	1. Power up RADAR: SIGNAL STRENGTH ind: CB PGNS: SIG STR DISP - close	Provides d-c power to RADAR: SIGNAL STRENGTH ind.
	3	2. Select display source from following: RADAR: TEST MON sel - ALT XMTR	Routes LR altitude transmitter power output to RADAR: SIGNAL STRENGTH ind during testing and flight operations.
		VEL XMTR	Routes LR velocity transmitter power output to RADAR: SIGNAL STRENGTH ind during testing and flight operations.
		AGC	During testing, specific value (TBD) of RR receiver signal strength is displayed. During flight operations signal varies.
	3	XMTR PWR	Displays specific value of transmitter output power during flight operations.
		SHAFT ERR	During testing, displays angle error signals as needle fluctuations of equal amplitude. During flight operations, these error signals are displayed as needle fluctuations, which represent smoothness of servo tracking and are usually of unequal amplitude.
		TRUN ERR	Same as shaft error.
		4.5.3.13 Heater Control Temperature Monitor Display	Displays radar antenna assembly, RCS quad, or S-band antenna temperature.
	16	1. Power up HTR CONT: TEMP ind: CB HTR: DISP - close	Provides d-c power to HTR CONT: TEMP ind.

CREW-MAN	PNL	PROCEDURES	REMARKS
		4.5.3.13 Heater Control Temperature Monitor Display (cont)	
	3	2. Select display source from following: HTR CONT: TEMP MON sel - RNDZ RADAR	Routes RR antenna assembly temperature to HTR CONT: TEMP ind. Display range is -100° to +200° F.
		LDG RADAR	Routes LR antenna assembly temperature to HTR CONT: TEMP ind. Display range is -100° to +200° F.
		RCS QUAD 1 (QUAD 2, QUAD 3, QUAD 4)	Routes selected RCS quad temperature to HTR CONT: TEMP ind. Quad temperature display range is -60° to 260°F.
		S BAND	Routes S-band antenna temperature to HTR CONT: TEMP ind. Display range is -100° to +200° F.
		4.5.3.14 RR LOS Azimuth and Elevation Display (V85)	Displays RR LOS azimuth and elevation angles on DSKY.
	3	1. RNDZ RADAR sel - LGC	
		2. Key V85E Poss OPR ERR lt - on Exit V85, Key RSET	OPR ERR lt - on if another extended verb from R76 is active.
		3. FL V16 N56 - RR LOS R1 Azimuth XXX.XX° R2 Elevation XXX.XX° R3 ---- To terminate: Key PRO, V34E or V32E Exit V85	 +000.00° to 360.00° about +Z. +000.00° to 360.00° about +Y.

PARA	TITLE	PAGE
4.6	G&C General	4.6-3
4.6.1	PGNS	4.6-3
4.6.1.1	LGC Power-Up	4.6-3
4.6.1.2	LGC Power-Down Program (P06)	4.6-4
4.6.1.3	IMU Power-Up (LGC Operating)	4.6-4
4.6.1.4	IMU Power-Up (LGC Off)	4.6-4
4.6.1.5	IMU Power-Down	4.6-5
4.6.1.6	LGC Idling Program (P00)	4.6-5
4.6.1.7	LGC Update Program (P27)	4.6-6
4.6.1.8	DAP Data Load Routine (R03)	4.6-8
4.6.1.9	Crew-Defined Maneuver Routine (R62)	4.6-11
4.6.1.10	Rendezvous Final Attitude Routine (R63)	4.6-13
4.6.1.11	Rendezvous Parameter Display Routine (R31)	4.6-16
4.6.1.12	Show Banksum	4.6-17
4.6.1.13	LGC Self-Test	4.6-17
4.6.1.14	DSKY Light Test	4.6-19
4.6.1.15	LGC/CMC Clock Synchronization Routine (R33)	4.6-20
4.6.1.16	PIPA Bias Measurement & Loading	4.6-21
4.6.1.17	Rate of Descent Controller/LGC Interface Check	4.6-23
4.6.1.18	AGS Initialization Routine (R47)	4.6-23
4.6.1.19	Preferred Tracking Attitude Program (P25)	4.6-26
4.6.1.20	Fresh Start	4.6-29
4.6.1.21	ICDU Zero	4.6-30
4.6.1.22	RR CDU Zero	4.6-31
4.6.1.23	Load IMU Attitude Error Meters	4.6-31
4.6.1.24	Increment LGC Time	4.6-32
4.6.1.25	Initialize Erasable Dump Via Downlink	4.6-32
4.6.1.26	Enable W-Matrix Initialization	4.6-33
4.6.1.27	ORDEAL Initialization	4.6-33
4.6.1.28	LGC Erasable Memory Display/Update	4.6-35
4.6.1.29	Restart	4.6-36
4.6.1.30	S-Band Antenna Routine (R05)	4.6-37
4.6.1.31	Interrupt Integration	4.6-38
4.6.1.32	Mode I Attitude Error Display	4.6-38
4.6.1.33	Mode II Attitude Error Display	4.6-38
4.6.1.34	W-Matrix Error Display	4.6-39
4.6.1.35	Move This Vehicle State Vector to Other State Vector	4.6-39
4.6.1.36	Final Automatic Request Terminate Routine (R00)	4.6-40
4.6.1.37	Erasable Modification Routine (R01)	4.6-41
4.6.1.38	Input ΔRLS for Pinpoint Landing	4.6-41
4.6.1.39	DSKY 88888 Clear	4.6-42
4.6.2	AGS/CES	4.6-42A
4.6.2.1	AGS Power-Up	4.6-42A
4.6.2.2	AGS Power-Down	4.6-44
4.6.2.3	AEA Self-Test	4.6-45
4.6.2.4	AGS Checkout	4.6-46
4.6.2.5	AGS Gyro & Accelerometer Calibration	4.6-46
4.6.2.6	AGS Manual Absolute Time Initialization	4.6-49
4.6.2.7	AGS Manual LM State Vector Update/Initialization	4.6-50
4.6.2.8	Load AGS Contingency LM Lunar Touchdown State Vector	4.6-51
4.6.2.9	AGS Manual CSM State Vector Update/Initialization	4.6-52
4.6.2.10	Deleted	4.6-53
4.6.2.11	Rate Gyro Check	4.6-54
4.6.2.12	AEA Readiness Check	4.6-55
4.6.2.13	AGS Orientation to Initial Computed Steering Attitude	4.6-56
4.6.2.14	AGS Accelerometer Calibration	4.6-58
4.6.2.15	AGS Wb Vector Update	4.6-59
4.6.2.16	AGS Lunar Surface Gyro Calibration	4.6-60
4.6.2.17	AGS Lunar Azimuth Store	4.6-61

PARA	TITLE	PAGE
4.6.2.18	AGS Rescaling From Lunar to Earth Mission	4.6-61
4.6.2.19	AGS Power-Up From AGS Partial Power-Down	4.6-63
4.6.2.20	AGS Partial Power-Down	4.6-63
4.6.3	Radar	4.6-64
4.6.3.1	Rendezvous Radar Power-Up	4.6-64
4.6.3.2	Rendezvous Radar Initial Activation & Checkout	4.6-64A
4.6.3.3	Rendezvous Radar Coarse Align	4.6-69
4.6.3.4	Rendezvous Radar Manual Designation to Mode II	4.6-70
4.6.3.5	Rendezvous Radar Manual Side-Lobe Acquisition Check & Main-Lobe Acquisition Verification	4.6-71
4.6.3.6	Terminate Rendezvous Radar Continuous Designate	4.6-79
4.6.3.7	Landing Radar Power-Up	4.6-79
4.6.3.8	Landing Radar Checkout	4.6-80
4.6.3.9	Command Landing Radar to Position 2	4.6-82
4.6.3.10	Landing Radar Spurious Test Routine (R77)	4.6-82
4.6.3.11	Landing Radar Power-Down	4.6-83

CREW-MAN	PNL	PROCEDURES	REMARKS
		4.6 G&C GENERAL	
		The G&C general procedures are usually performed during orbital flight and involve both PGNS and AGS/CES procedures. Being basic for G&C operations, they are variously referred to or included as part of the more comprehensive G&C procedures in paragraphs 4.7 through 4.12. In addition, applicable G&C reference modes (para 4.5) are referenced throughout the G&C procedures.	
		Two assumptions are made before initiating any G&C procedure: (1) Circuit Breaker Activation (para 4.2.4) has been completed and (2) RCS Pressurization (para 4.2.30) and RCS Hot/Cold Firing Check (para 4.2.31) have been completed.	
		4.6.1 PGNS	
		4.6.1.1 LGC Power-Up	Purpose of LGC Power-Up procedure is to bring LGC from off mode to operate mode or from standby mode to operate mode. Step 2 is not required if step 1 is performed.
	11	1. CB PGNS: LGC/DSKY - close	
	1 1,2	Poss LGC warn lt - on (up to 20 sec)	LGC warn lt - on due to LGC startup transient conditions. Light stays on until capacitor discharges. LGC warn lt discrete is normally closed contact; therefore, light is on when CWEA is powered up and LGC is not.
	4	Poss RESTART lt - on Key RSET, and/or Poss PROG lt - on Key RSET Poss NO DAP lt - on	RESTART lt and/or PROG lt may go on due to LGC startup transients. If alarm 01105 (downlink too fast) occurs, key RSET and ignore alarm. NO DAP lt - on if IMU powered down
		2. Key PRO for 3 sec FL V37 (P06 static) If LGC reverts to standby after PRO is keyed, repeat step 2. Key RSET Poss NO DAP lt - on	 NO DAP lt - on if IMU powered down
		3. Perform Fresh Start.	Ref para 4.6.1.20.

CREW-MAN	PNL	PROCEDURES	REMARKS
		4.6.1.2 LGC Power-Down Program (P06)	Purpose of LGC Power-Down Program (P06) is to transfer LGC from operate mode to standby mode. In order for LGC to maintain accurate value of GET, it must be brought to operate condition once every 23 hours.
		LGC Power-Up (required)	Ref para 4.6.1.1.
		1. Key V37E 06E	Exit from P06 cannot be accomplished without putting LGC into standby mode, or keying V69E or V96E.
		2. FL V50 N25 - Checklist reference R1 00062 - Switch LGC power down R2 ----- R3 ----- Key PRO until STBY lt - on	
		3. (Optional)	
	11	CB PGNS: LGC/DSKY - open	Removes power from LGC/DSKY; IMU may be left on for total attitude reference.
	1,2	MASTER ALARM - on	
	1	LGC warn lt - on	LGC warn lt discrete is normally closed contact; therefore, light is on when CWEA is powered up and LGC is not.
	1/2	MASTER ALARM pb/lt - reset	
			If computer power is switched off, it will be necessary to perform Fresh Start (V36) procedure (para 4.6.1.20) after power-up.
		4.6.1.3 IMU Power-Up (LGC Operating)	Purpose of IMU Power-Up procedure is to transfer IMU from standby mode to operate mode, with LGC operating.
		LGC Power-Up (required)	Ref para 4.6.1.1.
	11	1. CB PGNS: IMU OPR - close	For PIPA stabilization, IMU should be on for at least 15 minutes.
	4	NO ATT lt - on for 90 sec, then off	
		NO DAP lt - off	
		4.6.1.4 IMU Power-Up (LGC Off)	This is backup procedure, to be used only when LGC is off or failed and IMU is desired as attitude reference only.
	11	1. CB PGNS: IMU STBY - close	
		2. Select PGNCS Total Attitude Display mode.	Ref para 4.5.3.1. Allows monitoring of IMU power-up.
		3. CB PGNS: IMU OPR - close	Energizes IMU cage relays and applies gyro-wheel power.

LM 3207

CREW-MAN	PNL	PROCEDURES	REMARKS
		4.6.1.4 IMU Power-Up (LGC Off) (cont)	
		4. Wait approx 90 sec.	
	3	5. S/C: IMU CAGE sw - ON (momentarily)	Causes IMU to go inertial with present body-axis as reference.
		4.6.1.5 IMU Power-Down	Purpose of IMU Power-Down procedure is to reduce IMU power from operate to standby condition. If LGC is in operate mode and is using IMU, IMU should not be powered down.
	11	1. CB PGNS: IMU OPR - open	
		CAUTION When GUID CONT sw - PGNS, CB PGNS: IMU OPR - open will disable 800-cps excitation to ACA & TTCA throttling.	
		2. If LGC operating: NO DAP lt - on Key V37E --E	Select desired programs not requiring IMU.
		CAUTION Only in case of emergency shall IMU be powered down beyond standby. CB PGNS: IMU STBY - open. If standby power is removed for more than 20 min, ISS calibration is no longer valid.	
		4.6.1.6 LGC Idling Program (P00)	Purpose of LGC Idling Program (P00) is to maintain LGC in state of readiness for any other program entry. P00 is automatically selected by extended verb 96 in Interrupt Integration procedure (para 4.6.1.31).
		LGC Power-Up (required)	Ref para 4.6.1.1.
		IMU Power-Up (LGC Operating) (desired)	Ref para 4.6.1.3. Enables crew maneuver via DAP operation. ISS should be on 15 minutes before thrusting maneuver.

G & GENER

LM 3231

CREW-MAN	PNL	PROCEDURES	REMARKS
		4.6.1.6 LGC Idling Program (P00) (cont)	
		1. Key V37E 00E	During this program, coasting integration routine will periodically update LM and CSM state vectors to approximately current time. Capability of selecting LGC program (V37E --E) is inhibited by LGC during this integration. Use of V37 at this time will result in program alarm (1520). Before state vector initialization, V96E should be used to prevent meaningless integration from tying up LGC.
		4.6.1.7 LGC Update Program (P27)	Purpose of LGC Update Program (P27) is to insert information into LGC via digital uplink from MSFN or via DSKY input.
		LGC Power-Up (required)	Ref para 4.6.1.1.
		DUA Enable (required)	Ref para 4.13.2.11.
		Communications Basic (required - near earth)	Ref 4.13.2.1.
		Lunar telemetry (required - lunar distance)	S-Band Steerable Antenna Activation and Checkout (para 4.2.20).
		1. Key V37E 00E	P00 is automatically selected by extended verb 96 in Interrupt Integration procedure (para 4.6.1.31).
		2. If AGS is operating: Key DEDA C 563+00000E	This step is performed to prevent erroneous data being taken by AGS.
	4	3. If update is automatic (via digital uplink): UPLINK ACTY lt - on; go to step 8 If update is manual: Receive & record data.	
		4. Desired update alternatives: a. Key V70E - Update lift-off time (P27) b. Key V71E - Load data block (P27) c. Key V72E - Load singular data (P27) d. Key V73E - Octal time increment (P27)	V71 may be used to update state vector, REFSMMAT, or landing site. V72 may be used to update DAP data.
		Poss OPR ERR lt - on Exit P27, Key RSET; or If P27 not displayed, reselect P00, repeat step 4.	OPR ERR lt - on if another extended verb from R76 is active.

LM 3231

CREW-MAN	PNL	PROCEDURES	REMARKS
		4.6.1.7 LGC Update Program (P27) (cont)	
		5. FL V21 N01 (if V71 or V72 entered) R1 ----- R2 Unchanged XXXXX R3 UPBUFF Octal Accept: Key XXXXXE index word (displayed in R1) Reject: Key V34E - Terminate	Load octal index word and display UPBUFF. UPBUFF is address of erasable memory location (initially 1173) used for temporary storage of index word to be loaded next. V70 and V73 do not require index word. Twenty locations are available for V71 and V72. Index word represents total number of quantities to be loaded including index word, addresses, and data. For V71 and V72, 3≤ index word ≤24 (octal). Difference between verbs is that V72 requires index word that must be odd. With V71, single address describes where block of data will go; 22 (octal) locations are available for update parameters in addition to index word and block address. With V72, separate address is needed for each data word, and each block consists of index word, and up to nine pair of address and data words in successive even-and-odd numbered locations. An index word is not required for either V70 or V73.
		6. FL V21 N01 - Data load request R1 ----- R2 Unchanged R3 AAAAA - Calculated machine address Accept: Key XXXXXE update data Repeat data load until all components are loaded. Reject: Key V34E - Terminate	Flashing continues until all data components are loaded. In this step, data can mean either a machine address or actual update data. For V71, first entry is always calculated address (specified in R3) followed by update components. For V72, first entry is calculated address followed alternately by update data, next address, update data, etc. For V70 and V73, only update data are entered.
		7. FL V21 N02 - Load octal identifier R1 ----- R2 Unchanged R3 UPTEMP	UPTEMP is erasable location (1166) for octal identifier. After last word in block being loaded is entered, noun changes to 02 to permit loading octal identifier of previously loaded block. This permits reloading block if MSFN detects previous value to be in error. If index word is to be changed, program should be terminated and reselected.
		Accept alternatives: a. Key V33E - Use data	Zeroes channel 77 (restart monitor) (only if completed a state vector update).

G & C GENERAL

LM 3231

CREW-MAN	PNL	PROCEDURES	REMARKS
		4.6.1.7 LGC Update Program (P27) (cont)	
		b. Key XXE - Octal identifier for data to be updated, return to step 6 Reject: Key V34E - Terminate	Loading octal identifier recycles program to step 6. After value is loaded, program continues to step 7, permitting additional MSFN changes to be made.
	4	8. Automatic update complete: UPLINK ACTY lt - off	
		9. If update was automatic, DSKY may indicate alarm because of transient condition. Perform DUA Disable.	Ref para 4.13.2.12.
		10. Exit P27, P00 is selected.	
		4.6.1.8 DAP Data Load Routine (R03)	Purpose of DAP Data Load Routine (R03) is to load and verify DAP data, channel 30 backup codes, and DPS gimbal trim angles and to perform engine gimbal trim. (An optional throttle test may also be performed.) Routine 03 should not be selected during powered flight (or when average g is on) to avoid difficulties in setting attitude deadband and mass settings.
		LGC Power-Up (required)	Ref para 4.6.1.1.
		1. Key V48E Poss OPR ERR lt - on Exit R03, key RSET	OPR ERR lt - on if another extended verb from R76 is active.
		2. FL V04 N46 R1 DAP configuration/response data code ABCDE R2 Channel 30 backup code 000IJ R3 ----- A = 1 - Ascent stage only A = 2 - Ascent & Descent stages A = 3 - Ascent & Descent stages docked with CSM B = 0 - Two-jet translation & roll/pitch minimum impulse (RCS system A) B = 1 - Two-jet translation & roll/pitch minimum impulse (RCS system B)	Two-jet system B X-axis translation should be selected in CSM-docked and LM-unstaged configurations, to avoid jet A2D impingement on descent stage and resulting torque

RC 1537, LM 3231

CREW-MAN	PNL	PROCEDURES	REMARKS
		4.6.1.8 DAP Data Load Routine (R03) (cont) B = 2 - Four-jet translation (Minimum impulse/RSC sys A) B = 3 - Four-jet translation (Minimum impulse/RCS sys B) C = 0 - Fine scaling ACA - 4°/sec (LM only) - 0.4°/sec (LM & CSM) C = 1 - Normal scaling ACA - 20°/sec (LM only) - 2.0°/sec (LM & CSM) D = 0 - Attitude deadband 0.3° (Subject to D = 1 - Attitude deadband 1.0° programmed D = 2 - Attitude deadband 5.0° deadband conditions)	loss. When docked with CSM, avoid +X-translation of more than 10 seconds duration with jet A2D to avoid bending and possible damage to docking tunnel. Manual maneuvers using 4°/second ACA scaling are more efficient (i.e., propellant-time product is lower) than manual maneuvers using 20°/second scaling. If D=3, 5° attitude deadband is selected by default. Programmed exceptions to the crew selected deadband in R03 occur during portions (or all) of the following with deadbands as indicated:

Condition	Deadband
P64; P41 (R60 through burn); P12, P70, P71 (RCS trim); P40, P41, P42 (RCS trim); P66 (if preceded by P64); R61, R65 (during R60 maneuver); R23	0.3°
P63, P40, P42 (R60 through MPS burn); P12, P70, P71, P66 (if selected from P63)	1.0°
CSM docked DAP code (A = 3 in R1 of N46)	1.4°
Fresh start	5.0°

Other programed exceptions to crew selected data load in N46:

A CSM DOCKED ----------
APSFLAG Set by P42 (@ TIG-30), P71, P68

B ACC4-2FL Set by P12, P70, P71 (selects four Jet)
AORBTRAN Switched by R40 (@ ENTR to V97) (reverses sys A or B selection)

LM 3231

CREW-MAN	PNL	PROCEDURES	REMARKS
		4.6.1.8 DAP Data Load Routine (R03) (cont)	C RHCSCALE ----------
			D DBSL2FLG None; see table above DBSELFLG
			E AUTR2FLG ---------- AUTR2FLG
		E = KALCMANU rate 0 - 0.2°/sec 1 - 0.5°/sec 2 - 2.0°/sec 3 - 10.0°/sec I = 0 - Test channel 30, bit 5 for AUTO THROTTLE discrete & act accordingly I = 1 - Ignore AUTO THROTTLE discrete & assume auto throttle is desired. J = 0 - Test channel 30, bits 1 & 4 for ABORT & ABORT STAGE discretes & act accordingly. J = 1 - Ignore ABORT & ABORT STAGE discretes. Accept: Key PRO Reject: Key V21, V22, or V24 - Load desired DAP data code and/or channel 30 back-up code	If docked with CSM, KALCMANU rate loaded should be 0.2°/second or 0.5°/second and 2.0°/second or 10°/second must not be selected (would result in excessive RCS propellant consumption and impingement).
		3. FL V06 N47 R1 LM weight XXXXX lb R2 CSM weight XXXXX lb R3 ----- Accept: Key PRO - If DPS has been staged, exit R03 Reject: Key V24E - Load desired parameters If descent stage is attached, proceed to step 4.	In light ascent stage configuration, it is possible to encounter high-rate attitude limit cycle. To correct this condition, load minimum LM weight of 5000 pounds in step 3. Minimum mass values are as follows: Ascent stage only - 4,850 pounds Descent stage attached - 14,462 pounds CSM - 9,060 pounds
		4. FL V06 N48 - Gimbal trim parameters R1 Pitch trim XXX.XX° R2 Roll trim XXX.XX° R3 ----- To accept displayed parameters & enable gimbal drive to trim:	Do not load zero or negative value in R1 or R2 of N48 otherwise PROG lt - on with FL V37 and alarm code 21204 stored in N09 will result. GDA Enable (para 4.5.2.4).
	11 3 1	CB S/C: DECA PWR - close (if open) S/C: PGNS sw - AUTO or ATT HOLD GUID CONT sw - PGNS	

CREW-MAN	PNL	PROCEDURES	REMARKS
		4.6.1.8 DAP Data Load Routine (R03) (cont)	
		CAUTION To prevent overheating descent engine throttling actuators, following control configuration must be established before arming descent eng.	
	11 4 TTCA 1 TTCA	CB PGNS: IMU OPR - close NO ATT lt - on for 90 seconds, then off THROTTLE/JETS cont (CDR) - THROTTLE ENG THR CONT: MAN THROT sw - CDR or: THROTTLE/JETS cont (LMP) - THROTTLE ENG THR CONT: MAN THROT sw - LMP	Required to prevent throttle valve actuator from overheating.
	5 1 1,2 1 1/2 3 1,2 2 1/2	Eng STOP pb/lt - push ENG THR CONT: ENG ARM sw - DES MASTER ALARM - on DES REG warn lt - on MASTER ALARM pb/lt - reset ENG GMBL sw - ENABLE Key PRO Within 60 seconds: MASTER ALARM - on ENG GMBL caut lt - on MASTER ALARM pb/lt - reset To reject: Key V24E - Load desired parameters, return to beginning of step 4 To exit R03, Key V34E	Light remains on until: (1) Normal pressures are established by DPS pressurization, (2) CB INST: CWEA is cycled which resets logic if ENG THR CONT: ENG ARM sw - OFF, or (3) staging occurs. When gimbal stops are reached, ENG GMBL caut lt goes on within 60 seconds and remains on until ENG THR CONT: ENG ARM sw or ENG GMBL sw - OFF in step 6. This should not be regarded as malfunction indication.
		5. Optional throttle test: TTCA (CDR) - minimum CMD THRUST ind - approx 10% TTCA (CDR) - soft stop CMD THRUST ind - approx 60% TTCA (CDR) - maximum CMD THRUST ind - approx 100%	Optional throttle test may be performed during gimbal drive to trim position.
		6. FL V50 N48 - Continue interrupted program R1 XXX.XX° R2 XXX.XX°	If RESTART lt - on and this display does not occur, gimbal drive process has been permanently interrupted; routine must be recalled and/or trim process repeated.

CREW-MAN	PNL	PROCEDURES	REMARKS
		4.6.1.8 DAP Data Load Routine (R03) (cont)	
		R3 XXX.XX*	Display indicates gimbal trim drive has been completed.
		Disable gimbal drive:	Flashing display of V50 N48 will not occur until 1
	1	ENG THR CONT: ENG ARM sw - OFF	minute minimum (2 minutes in worst case) has elapsed
		Reset eng STOP pb/lt:	after PRO, step 4.
		a. Release tab - push	
		b. Verify eng STOP pb/lt - on	
		c. If eng STOP pb/lt - off, verify that lights are functioning by performing Caution & Warning Array Checkout, steps 3 & 4.	Ref para 4.2.10.
		If lights are functioning, inadvertent reset has taken place & engine is enabled. Steps d, e, & f should not be performed.	
		d. Eng STOP pb/lt - push	
		e. Release tab - push	
		f. Verify eng STOP pb/lt - off	
	2	ENG GMBL caut lt - off	
		Key PRO, ENTR, or V34E (terminate) - Exit R03	
		4.6.1.9 Crew-Defined Maneuver Routine (R62)	Purpose of Crew-Defined Maneuver Routine (R62) is to provide crew with means of specifying final vehicle attitude when using LGC-controlled attitude maneuver. This routine can be entered only from P00.
		LGC Power-Up (required)	Ref para 4.6.1.1.
		LGC Self-Test (desired)	Ref para 4.6.1.13.
		IMU Power-Up (LGC Operating) (required)	Ref para 4.6.1.3. ISS should be on 15 minutes before thrusting maneuver.
			Most programs and extended verbs that perform maneuvers, require P51 and check for it via R02.
		DAP Data Load Routine (R03) (required)	Ref para 4.6.1.8.
		1. Enable PGNCS attitude control:	
	1	GUID CONT sw - PGNS	
	3	S/C:	
		PGNS sw - ATT HOLD	
		ROLL, PITCH, YAW sw - MODE CONT	
	4	ACA/4 JET sw (2) - ENABLE	
	1, 2	ACA PROP sw (2) - ENABLE	

CREW-MAN	PNL	PROCEDURES	REMARKS
		4.6.1.9 Crew-Defined Maneuver Routine (R62) (cont)	
		2. Establish PGNCS total attitude & attitude rate/error display: ATTITUDE MON sw - PGNS RATE/ERR MON sw (2) - LDG RDR/CMPTR	Ref para 4.5.3.1 and 4.5.3.2.
		3. Key V49E Poss OPR ERR lt - on Exit R62, Key RSET	OPR ERR lt - on if another extended verb from R76 is active or if LGC Idling Program (P00) is not in process.
		4. FL V06 N22 R1 OGA XXX.XX° R2 IGA XXX.XX° R3 MGA XXX.XX° Accept: Key PRO Reject: Key V25E - Load new gimbal angles for R60	
		5. Attitude Maneuver Routine (R60)	Automatic attitude maneuvers are more efficient (i.e., propellant-time product is lower) than manual attitude maneuvers.
		FL V50 N18 - Perform desired automatic maneuver to final FDAI angles R1 Roll XXX.XX° R2 Pitch XXX.XX° R3 Yaw XXX.XX° To reject attitude maneuver: When within DAP deadband limits, & further adjustment about desired vector is not desired, Key ENTR, exit R60/R62 To perform attitude maneuver:	If final computed FDAI angles result in ±90° yaw, transformation from IMU to FDAI angles in roll and pitch is indeterminate; R1 and R2 will be zero.
	ACA 3	a. To adjust vehicle attitude & have LGC recompute gimbal angles, Select desired attitude control mode - ACA - maneuver as desired S/C: PGNS sw - ATT HOLD Key PRO Return to beginning of step 5.	Adjustment is not possible in all cases, including roll attitude adjustment. Ref para 4.5.1. If GUID CONT sw - PGNS and S/C: PGNS sw - AUTO, LGC commands automatic attitude maneuver.
	ACA	b. To perform attitude maneuver manually: Select desired attitude control mode - ACA - maneuver manually to required attitude Key PRO Return to beginning of step 5.	Ref para 4.5.1.

LM 3158

CREW-MAN	PNL	PROCEDURES	REMARKS
		4.6.1.9 Crew-Defined Maneuver Routine (R62) (cont)	
	1 3	c. To perform attitude maneuver automatically: GUID CONT sw - PGNS S/C: PGNS sw - AUTO Key PRO Go to step 6.	Automatic trim maneuver is to be considered essential for maneuvering to thrusting attitudes.
		6. If PGNCS Automatic selected: DSKY displays are blanked until completion of automatic maneuver. Monitor FDAI belly band, with respect to color band on roll bezel, to avoid gimbal lock.	If desired, Key extended verbs or Key V16 N18 - Final FDAI angles R1 Roll XXX.XX° R2 Pitch XXX.XX° R3 Yaw XXX.XX° Key KEY REL Belly band covers separation between hemispheres of FDAI ball. Belly band, in color bands on each side of FDAI roll bezel, would indicate IMU middle gimbal angle $\geq 75°$.
		To stop LM motion if gimbal lock is approached: S/C: PGNS sw - ATT HOLD	During this maneuver, LGC will terminate automatic manuever if S/C: PGNS sw is switched out of AUTO.
	ACA	If manual override & completion of maneuver is desired: Select desired attitude control mode - ACA - maneuver manually Return to step 5.	Ref para 4.5.1.
		4.6.1.10 Rendezvous Final Attitude Routine (R63)	Purpose of Rendezvous Final Attitude Routine (R63) is to calculate and display final FDAI angles required to point +Z-axis or +X-axis at CSM and to call Attitude Maneuver Routine (R60) for automatic maneuver capability. This routine is selected only during LGC Idling Program (P00).
		LGC Power-Up (required)	Ref para 4.6.1.1.
		LGC Self-Test (desired)	Ref para 4.6.1.13.
		IMU Power-Up (LGC Operating) (required)	Ref para 4.6.1.3. ISS should be on 15 minutes before thrusting maneuver.
		IMU Orientation Determination Program (P51) (required)	Ref para 4.9.1.1.
		DAP Data Load Routine (R03) (required)	Ref para 4.6.1.8.
		LGC state vector valid (required)	LGC Update Program (P27) (para 4.6.1.7).

G & C GENERA

CREW-MAN	PNL	PROCEDURES	REMARKS
		4.6.1.10 Rendezvous Final Attitude Routine (R63) (cont)	
		1. Enable PGNCS attitude control:	Ref para 4.5.1.
	1	GUID CONT sw - PGNS	
	3	S/C:	
		PGNS sw - ATT HOLD	
		ROLL, PITCH, & YAW sw - MODE CONT	
	4	ACA/4 JET sw (2) - ENABLE	
	1,2	ACA PROP sw (2) - ENABLE	
		2. Establish PGNCS total attitude & attitude rate/error display:	Ref para 4.5.3.1 and 4.5.3.2.
	1	ATTITUDE MON sw - PGNS	
	1,2	RATE/ERR MON sw (2) - LDG RDR/CMPTR	
		3. Key V89E	
	4	Poss OPR ERR lt - on	
		Exit R63, key RSET	OPR ERR lt - on if LGC Idling Program (P00) is not in process or if another extended verb from R76 is active.
		Poss PROG lt - on	
		Key V05 N09E - Call alarm	
		00210 - IMU not on	Perform IMU Power-Up (LGC Operating) procedure (para 4.6.1.3). Perform IMU Orientation Determination Program (P51) (para 4.9.1.1).
		00220 - ISS orientation not known	
		Key KEY REL & RSET	
		FL V37 N--	
		Key XXE, exit R63	
		4. FL V04 N12 - Option	
		R1 00003 - Specify tracking attitude	
		R2 00001 - Attitude option (+Z)	
		R3 -----	
		R2 00001 = Preferred (+Z)	
		00002 = +X-axis	
		Accept: Key PRO	
		Reject: Key V22E - Key 2E (+X)	
		5. FL V06 N18 - FDAI angles at track attitude	
		R1 Roll XXX.XX°	
		R2 Pitch XXX.XX°	
		R3 Yaw XXX.XX°	
		Update display: Key V32E	
		Automatic attitude maneuver: Key PRO	
		Terminate: Key V34E	

CREW-MAN	PNL	PROCEDURES	REMARKS
		4.6.1.10 Rendezvous Final Attitude Routine (R63) (cont)	
		6. Attitude Maneuver Routine (R60)	Automatic attitude maneuvers are more efficient (i.e., propellant-time product is lower) than manual attitude maneuvers.
		FL V50 N18 - Perform desired automatic maneuver to final FDAI angles R1 Roll XXX.XX° R2 Pitch XXX.XX° R3 Yaw XXX.XX°	If final computed FDAI angles result in ±90° yaw, transformation from IMU to FDAI angles in roll and pitch is indeterminate; R1 and R2 will be zero.
		To reject attitude maneuver: When within DAP deadband limits, & further adjustment about desired vector is not desired, Key ENTR, exit R60/R63	
		To perform attitude maneuver: a. To adjust vehicle attitude & have LGC recompute gimbal angles, Select desired attitude control mode - ACA - maneuver as desired	Adjustment is not possible in all cases, including roll attitude adjustment. Ref para 4.5.1.
	3	S/C: PGNS sw - ATT HOLD Key PRO Return to beginning of step 6.	If GUID CONT sw - PGNS and S/C: PGNS sw - AUTO, LGC commands automatic attitude maneuver.
		b. To perform attitude maneuver manually: Select desired attitude control mode - ACA - maneuver manually to required attitude Key PRO Return to beginning of step 6.	Ref para 4.5.1.
		c. To perform attitude maneuver automatically:	Automatic trim maneuver is to be considered essential for maneuvering to thrusting attitudes,
	1 3	GUID CONT sw - PGNS S/C: PGNS sw - AUTO Key PRO Go to step 7.	
		7. If PGNCS automatic selected: DSKY displays are blanked until completion of automatic maneuver. Monitor FDAI belly band, with respect to color band on roll bezel, to avoid gimbal lock.	If desired, Key extended verbs or Key V16 N18 - Final FDAI angles R1 Roll XXX.XX° R2 Pitch XXX.XX° R3 Yaw XXX.XX° Key KEY REL Belly band covers separation between hemispheres of FDAI ball. Belly band, in color bands on each side of FDAI roll bezel, would indicate IMU middle gimbal angle ≥75°.

G & C GENERAL

CREW-MAN	PNL	PROCEDURES	REMARKS
		4.6.1.10 Rendezvous Final Attitude Routine (R63) (cont) To stop LM motion if gimbal lock is approached: S/C: PGNS sw - ATT HOLD If manual override & completion of maneuver is desired: Select desired attitude control mode - ACA - maneuver manually Return to step 6.	During this maneuver, LGC will terminate automatic maneuver if S/C: PGNS sw is switched out of AUTO. Ref para 4.5.1.

G & C
GENERA

CREW-MAN	PNL	PROCEDURES	REMARKS
		4.6.1.11 <u>Rendezvous Parameter Display Routine (R31)</u>	Purpose of Rendezvous Parameter Display Routine (R31) is to display, at request of astronaut, LGC-calculated rendezvous parameters (range, range rate, and θ).
		LGC Power-Up (required)	Ref para 4.6.1.1.
		LGC Self-Test (desired)	Ref para 4.6.1.13.
		IMU Power-Up (LGC Operating) (required)	Ref para 4.6.1.3. ISS should be on 15 minutes before thrusting maneuver.
		IMU Orientation Determination Program (P51) (required)	Ref para 4.9.1.1.
			To monitor progress of state vector integration, time (GET) to which state vector integration process has presently calculated state vector is available as follows: Key V16 N38E - TET R1 00XXX hr R2 000XX min R3 0XX.XX sec To release display: Key KEY REL
		1. Key V83E Poss OPR ERR lt - on Exit R31, key RSET	OPR ERR lt - on if another extended verb from R76 is active. Effects of marks on state vectors will not be exhibited in display of range and range rate if navigation marks are made after R31 is selected and running.
		2. FL V16 N54 - Rendezvous parameters R1 Range XXX.XX nm R2 Range rate XXXX.X fps R3 θ XXX.XX° Display update every 0.5 sec. To terminate display: Key PRO, exit R31	If R31 is run for long time during coast flight, range and range rate data in N54 will begin to degenerate because of conic extrapolation of state vector. Range rate display may degrade considerably at range <0.5 nm, depending on navigation accuracy. If V83 is called while on lunar surface, R3 of N54 will read approximately 180°, whereas it might be expected to read 0°. This is attributable to computational method and should be ignored.

CREW-MAN	PNL	PROCEDURES	REMARKS
		4.6.1.12 Show Banksum	Purpose of Show Banksum (V91) procedure is to verify contents of fixed memory. Recommended: Show Banksum procedure should be completed before LGC Self-Test procedure (para 4.6.1.13), if it is desired to leave self-test running.
		LGC Power-Up (required)	Ref para 4.6.1.1.
		LGC Idling Program or Fresh Start (required)	Ref para 4.6.1.6 or 4.6.1.20. At start of Show Banksum, +0 is put in SMODE register and forces LGC Self-Test into backup idle loop.
		1. Key V91E Poss OPR ERR lt - on Exit V91, key RSET FL V05 N01 R1 Sum of bank AAAXX R2 Actual bank number 000YY R3 Bugger word ZZZZZ	OPR ERR lt - on if not in P00 or if another extended verb is active. Bugger word is value which, when added to Banksum, makes result equal bank number or its 7's complement.
		Verify Banksum equals bank number or its 7's complement Key V32E to recheck Banksum display Proceed: Key PRO - Go to next step in cycle Terminate: Key V34E - Exit Show Banksum	Bank number starts at zero and increments to next highest bank until Banksum repeats cycle from zero.
		2. If discrepancy appears, record bank number for transmittal to MSFN & terminate use of LGC after completion of test.	
		4.6.1.13 LGC Self-Test	Purpose of this procedure is to initiate and monitor LGC Self-Test, leaving self-test running in background; i.e., when LGC is not otherwise employed. Selection of P00 before self-test tends to maximize LGC time available for self-test.
		LGC Power-Up (required)	Ref para 4.6.1.1.
		1. Key V21 N27E OE (Set SMODE for backup idle mode.)	Steps 1, 2, and 3 are optional.
		2. Zero SCOUNT, SCOUNT +1, & ERCOUNT registers: Key V25 N01E 1365E E - (ERCOUNT) E - (SCOUNT) E - (SCOUNT +1)	ERCOUNT - Error counter SCOUNT - Self-test counter SCOUNT +1 - Erasable memory, cycle, and shift registers check good counter.

CREW-MAN	PNL	PROCEDURES	REMARKS
		4.6.1.13 LGC Self-Test (cont)	
		3. Alternative to step 1: Key V36E - Fresh Start Observe DSKY blanks.	Fresh Start procedure also sets SMODE and ERCOUNT to +0.
		4. Start monitoring of ERCOUNT, SCOUNT, & SCOUNT +1: Key V15 N01E 1365E	
		5. Key V21 N27E AAAAAE where AAAAA (SMODE) = one of five-digit codes listed below	
		One cycle / Cycles / Check	
		00001(+1) / 77776 (-1) / Perform ±4 & ±5.	If LGC detects error during one cycle selection (+ non-zero), LGC goes to backup idle (+0). If no error is detected, test is repeated. If LGC detects error during repeated cycles (- non-zero), LGC tries test again. If no error is detected, test is repeated. If -0 is detected and error is detected, test continues from failed location.
		00002(+2) / 77775 (-2) / Perform ±4 & ±5.	
		00003(+3) / 77774 (-3) / Perform ±4 & ±5.	
		00004(+4) / 77773 (-4) / Perform ERASCHK, CNTRCHK, & CYCLSHFT if no new job is waiting	
		00005(+5) / 77772 (-5) / Perform ROPECHK if no new job is waiting.	
		00006(+6) / 77771 (-6) / Perform ±4 & ±5.	
		00007(+7) / 77770 (-7) / Perform ±4 & ±5.	
		00010(+10) / 77767 (-10) / Perform ±4 & ±5.	
		00011 to 37777 (>+10) / 77766 to 40000 (<-10) / Change to +0.	
		00000(+0) / - / Perform backup idle mode; looks for new job.	
		- / 77777 (-0) / Perform ±4 & ±5.	
		6. Monitor register R2 (SCOUNT) Normal indication: 00001 for approx 13 sec 00002 for approx 52 sec 00003 for approx 13 sec, etc	LGC self-test continues until SMODE is changed by DSKY entry or error is detected. However, once it is started, self-test runs only in background (when LGC is idling). Times quoted are minimum and are highly dependent upon present computer activity (e.g. with digital autopilot on, total time could be as long as 95 seconds).
		Abnormal indication: PROG lt - on If SMODE (-) non-zero, key VERB	Verb pb is used to momentarily inhibit updating of DSKY by running monitor. Other DSKY pb's which will also freeze DSKY display are NOUN, CLEAR, +, -, or any digit.
		7. Record R1 (ERCOUNT) R2 (SCOUNT) R3 (SCOUNT +1) Key V05 N09E - Call alarm	Alarm can occur any time after step 5.

RC 1606

CREW-MAN	PNL	PROCEDURES	REMARKS
		4.6.1.13 LGC Self-Test (cont)	
		R1 XXXXX R2 XXXXX R3 XXXXX If 01102 appears: Key V05 N08E - Alarm data R1 Octal - ALMCADR R2 Octal - ALMCADR +1 R3 Octal - ERCOUNT Record R1 (ALMCADR). If 01102 does not appear: Attend to alarm & continue.	ALMCADR - Contents of SFAIL = 1 + address of failure ALMCADR +1 - BBCON of SELFCHK ERCOUNT - Amount of self-check failures since last crew-initiated fresh start or manual zero of ERCOUNT.
		If SCOUNT was odd number when PROG lt came on: a. Key V01 N01E 1374E, record R1 (SKEEP 4) b. Key ENTR 1377E, record R1 (SKEEP 7) c. Transmit ALMCADR, SKEEP 4, & SKEEP 7 to MSFN. d. Terminate use of LGC (erasable memory problem).	
		If SCOUNT was even number when PROG lt came on: a. Perform Show Banksum procedure (para 4.6.1.12). b. Transmit number of failed bank to MSFN. c. Terminate use of LGC (fixed memory problem).	
		4.6.1.14 DSKY Light Test	Purpose of DSKY Light Test procedure is to verify correct illumination of all DSKY lights, except CMPTR ACTY.
		LGC Power-Up (required)	Ref para 4.6.1.1.
		1. Key V35E - DSKY lights test Poss OPR ERR lt - on Exit V35, key RSET	OPR ERR lt - on if DSKY light test (V35) is not performed in POO.
	4	2. UPLINK ACTY lt - on NO ATT lt - on STBY lt - on KEY REL lt - on (flashing) OPR ERR lt - on (flashing) PRIO DISP lt - on NO DAP lt - on TEMP lt - on GIMBAL LOCK lt - on PROG lt - on RESTART lt - on TRACKER lt - on ALT lt - on VEL lt - on	

G & C
GENER

RC 1606

CREW-MAN	PNL	PROCEDURES	REMARKS
		4.6.1.14 DSKY Light Test (cont)	
		PROG ind - 88 VERB ind - 88 (flashing) NOUN ind - 88 (flashing) R1 +88888 R2 +88888 R3 +88888	
	1	ISS warn lt - on	
		LGC warn lt - on	
	1,2	MASTER ALARM - on	
		MASTER ALARM pb/lt - reset	
		3. After 5 sec: UPLINK ACTY lt - off NO ATT lt - off Key RSET STBY lt - off KEY REL lt - off OPR ERR lt - off PRIO DISP lt - off NO DAP lt - off TEMP lt - off GIMBAL LOCK lt - off PROG lt - off RESTART lt - off TRACKER lt - off ALT lt - off VEL lt - off PROG ind - 00 VERB ind - -- NOUN ind - -- R1 ----- R2 ----- R3 ----- ISS warn lt - off LGC warn lt - off	
		4.6.1.15 LGC/CMC Clock Synchronization Routine (R33)	Purpose of LGC/CMC Clock Synchronization Routine (R33) is to determine time differential between LGC clock and CMC clock.

RC 1606

CREW-MAN	PNL	PROCEDURES	REMARKS
		4.6.1.15 LGC/CMC Clock Synchronization Routine (R33) (cont)	
		LGC Power-Up (required)	Ref para 4.6.1.1. and CMC clock
		1. If precise value (difference between LGC & CMC clocks) is available from MSFN, go to step 7.	
		2. Confirm selection of Routine 33 in CSM.	
		3. Key V06 N65 (Do not enter.)	
		4. Perform countdown with CMP & key ENTR on mark command.	
		5. V06 N65 - LGC clock time R1 00XXX hr R2 000XX min R3 0XX.XX sec Record LGC clock time. Obtain CMC clock time from CSM crewmember. Compute clock-time difference. If more clock-time difference data points are desired, return to step 4 & repeat procedures. To discontinue procedure, key KEY REL To complete procedure, go to step 6.	
		6. Determine average of all clock-time differences.	
		7. Key V55E (increment LGC time) Poss OPR ERR 1t - on	OPR ERR 1t - on if another extended verb from R76 is active.
		8. FL V21 N24 Key clock hr-difference FL V22 N24 Key clock min-difference FL V23 N24 Key clock sec-difference (0.01 sec)	Polarity is plus (+) if LGC gives lower clock indication.
		9. If clock check is desired, repeat steps 3 through 5.	

CREW-MAN	PNL	PROCEDURES	REMARKS
		4.6.1.16 PIPA Bias Measurement & Loading	
		LGC Power-Up (required)	Ref para 4.6.1.1.
		IMU Power-Up (LGC Operating) (required)	Ref para 4.6.1.3. ISS should be on 15 minutes before thrusting maneuver.
		1. Establish Attitude Rate Display mode.	Ref para 4.5.3.5.
		2. Establish desired attitude control mode.	Ref para 4.5.1.
		Ensure attitude rates are <0.1°/sec.	
	3	3. Set EVNT TMR ind - 00:00	Ref para 4.13.6.
		4. S/C: PGNS sw - OFF	
		5. Key V25 N21E E, E Key ENTR & start EVNT TMR ind simultaneously	Zeroes PIPA pulse registers.
		6. Key V06E When EVNT TMR ind - 01:20: Key ENTR Record final PIPA counts R1 X ----- pulses R2 Y ----- pulses R3 Z ----- pulses	Time shown is for 80-second (01:20) bias check. If very short check is desired, perform step 6 at EVNT TMR ind - 00:08 and use divisor of 100 for step 7. PIPA pulses are displayed as ± integers in right-hand digits of readout. Formula for calculating PIPA bias compensation results in decimal fraction (with decimal point on left).
		7. Calculate PIPA bias: $\frac{\text{Final count}}{1000}$ = PIPA bias	
		8. Key V06 N01E - Present bias 1452E - Record R1 X Bias ± ----- 1454E - Record R1 Y Bias ± ----- 1456E - Record R1 Z Bias ± -----	
		9. Update PIPA bias: Key V21 N01E 14XXE (applicable bias) ±.XXXXXE - Calculated value	

CREW-MAN	PNL	PROCEDURES	REMARKS
		4.6.1.17 Rate of Descent Controller/LGC Interface Check	
		LGC Power-Up (required)	Ref para 4.6.1.1.
		1. Key V11 N10E 16E - Monitor input channel 16 R1 XXCDX - Rate-of-descent inbit configuration R2 ----- R3 -----	
	5	2. DES RATE sw - center Verify C = 0 & D < 4	
		3. DES RATE sw - +1 FPS (plus) Verify D > 3 PROG lt - on	Alarm code 00112 stored if DES RATE sw activated with average g off and not in P52 or P57.
		4. DES RATE sw - -1 FPS (minus) Verify C = 1	
		4.6.1.18 AGS Initialization Routine (R47)	Purpose of AGS Initialization Routine (R47) is to initialize AGS absolute time and/or to initialize/update AGS LM/CSM state vector. CSM state vector must be updated after each CSM thrust maneuver. If this routine is called from P00 or P3X (with P20 not in operation), LGC will send CDU zero discrete and disable DAP for approximately 12 seconds.
		LGC Power-Up (required)	Ref para 4.6.1.1.
		LGC Self-Test (desired)	Ref para 4.6.1.13.
		IMU Power-Up (LGC Operating) (required)	Ref para 4.6.1.3. ISS should be on 15 minutes before thrusting maneuver.
		IMU Orientation Determination Program (P51) (required)	Ref para 4.9.1.1.
		AGS Power-Up (required)	Ref para 4.6.2.1.

LM 999, LM 3231

CREW-MAN	PNL	PROCEDURES	REMARKS
		4.6.1.18 AGS Initialization Routine (R47) (cont)	
		AGS Checkout (desired)	Ref para 4.6.2.4.
		Set Mission Timer	Ref para 4.2.12.
		LGC/CMC Clock Synchronization Routine (R33)	Ref para 4.6.1.15.
		Communications Basic (desired - near earth)	Ref para 4.13.2.1.
		S-Band Steerable Antenna Activation and Checkout (desired - lunar distance)	Ref para 4.2.20.
		1. Select AGS Initialization Routine (R47): Key V47E If only AGS LM/CSM state vector update is performed, omit step 3.	
		Poss OPR ERR lt - on Exit R47, key RSET	OPR ERR lt - on if another extended verb from R76 is active.
		Poss PROG lt - on Key V05 N09E - Call alarm 00220 - REFSMFLG not set Key KEY REL & RSET, exit R47 Perform IMU Orientation Determination Program (P51) Return to beginning of step 1.	Ref para 4.9.1.1.
		2. FL V06 N16 R1 00XXX hr R2 000XX min R3 0XX.XX sec	Before first AEA clock initialization, V06 N16 contains meaningless value. After AEA clock initialization, V06 N16 contains stored GET of AEA clock zero (K). (GET of AEA clock zero is MIT/DL expression for AGS time bias.) AGS time bias is required because AGS time is limited to approximately 72 hours. GET - AGS time bias (K) = AGS time.
		3. Initialization of AGS time: a. Option I: AEA clock zero Key DEDA C 377+00000 (Do not enter.) Key DSKY V32 (Do not enter.) Key ENTR on DSKY & DEDA simultaneously.	AEA clock is set to zero and simultaneously, present GET is set into V06 N16 by entering V32.

CREW-MAN	PNL	PROCEDURES	REMARKS
		4.6.1.18 AGS Initialization Routine (R47) (cont)	
		b. Option II: Selection of specific AGS time bias (K)	To simplify computation of AGS time, value for GET of AEA clock zero (K) can be determined that: 1. Can be readily subtracted from GET to obtain AGS time 2. Has occurred in recent past 3. Is easy to remember
		Key DEDA C 377+XXXXX (0.1 min)	Positive value of XXXXX and GET of AEA ENTR must be determined so that GET of AEA ENTR less XXXXX equals predetermined AGS time bias (K).
		Key DEDA ENTR If only time initialization is performed, omit steps 5 & 8 thru 11.	Entry to be made at GET of AEA ENTR.
		4. Verify AGS time is incrementing from XXXXX value entered in step 3: Key DEDA C 377R	
		5. Command LM/CSM state vector update via PGNCS downlink: Key DEDA C 414+10000E CAUTION COMM: TLM PCM sw must be set to HI.	If +00000 or +10000 is inadvertently entered into address 414, search of PGNCS downlink for identification word can be eliminated by keying C 563+00000E.
		6. Check V06 N16 If value is not satisfactory, or if option "b" selected in step 3: Key in correct value. Record K, Key PRO	MSFN can obtain precise value of K by comparing LGC and AEA downlink and can correct for uncertainties in processing pushbutton depression.
		7. V06 N16 R1 00XXX hr R2 000XX min R3 0XX.XX sec	
		8. FL V50 N16 R1 00XXX hr R2 000XX min R3 0XX.XX sec	After keying PRO (step 6), display is static until AEA downlink list is transmitted 10 times at 2 seconds per transmission (20 seconds). Then, if IMU is not in use, CDU, LGC, and AEA gimbal-angle counters are zeroed and DAP is disabled and NO DAP lt - on for approximately 12 seconds. The flashing V50 N16 display, which follows (after either approximately 20 seconds, or approximately 32 seconds if CDU zero is performed), indicates completion of downlink navigation update (and CDU Zero if performed).

CREW-MAN	PNL	PROCEDURES	REMARKS
		4.6.1.18 AGS Initialization Routine (R47) (cont)	
		9. Verify AGS initialization complete: Key DEDA C 414R+00000 To terminate: Key PRO, V32E, or V34E	Occurs within 2 seconds.
		10. If update accuracy verification is desired: Display LGC rendezvous parameters (R31) - Key V83E Poss OPR ERR lt - on Exit R31, key RSET FL V16 N54 R1 Range XXX.XX nm R2 Range rate XXXX.X fps R3 θ XXX.XX°	OPR ERR lt - on if another extended verb from R76 is in process. Range rate comparison is usable up to 8,388,000 feet (1380 nm) in lunar orbit; up to 33,554,000 feet (5,518 nm) in earth orbit.
		11. Read out AGS range rate: Key DEDA C 440R XXXXX (0.1/1 fps) Compare PGNCS & AGS values of range rate. Values should be within 10 fps. To terminate R31: Key PRO	If IMU orientation has changed since last AGS alignment, perform PGNCS/AGS Align (para 4.9.2.1). Wait at least 30 seconds after CDU zero. Parenthetical quantization notation: lunar mission/earth mission.
		4.6.1.19 Preferred Tracking Attitude Program (P25)	Purpose of Preferred Tracking Attitude Program (P25) is to compute LM preferred tracking attitude that will enable CSM tracking of LM beacon and to perform maneuver to preferred tracking attitude.
		LGC Power-Up (required)	Ref para 4.6.1.1.
		LGC/CMC Clock Synchronization Program (R33) (required)	Ref para 4.6.1.15.
		IMU Power-Up (LGC Operating) (required)	Ref para 4.6.1.3. ISS should be on 15 minutes before thrusting maneuver.
		LGC Update Program (P27) (desired)	Ref para 4.6.1.7.
		IMU Orientation Determination Program (P51) (required)	Ref para 4.9.1.1.
		DAP Data Load Routine (R03) (required)	Ref para 4.6.1.8.

CREW-MAN	PNL	PROCEDURES	REMARKS
		4.6.1.19 Preferred Tracking Attitude Program (P25) (cont)	
		1. Enable PGNCS attitude control:	
	1	GUID CONT sw - PGNS	
	3	S/C:	
		PGNS sw - ATT HOLD	
		ROLL, PITCH, & YAW sw - MODE CONT	
	4	ACA/4 JET sw (2) - ENABLE	
	1,2	ACA PROP sw (2) - ENABLE	
		2. Establish PGNCS total attitude & attitude rate/error display:	Ref para 4.5.3.1 and 4.5.3.2.
	1	ATTITUDE MON sw - PGNS	
		RATE/ERR MON sw - LDG RDR/CMPTR	
		3. Select P25:	
		Key V37E 25E	
		Poss PROG lt - on	
		Key V05 N09E - Call alarm	
		00210 - IMU not on	Perform IMU Power-Up (LGC Operating) procedure (para 4.6.1.3).
		00220 - ISS orientation not known	Perform IMU Orientation Determination Program (P51) (para 4.9.1.1).
		Key KEY REL & RSET	
		FL V37 N--	
		Key XXE, exit P25	
		Fine Preferred Tracking Attitude Routine (R65)	Fine Preferred Tracking Attitude Routine (R65) silently performs automatic trim to tracking attitude if maneuver <15°. If limits are exceeded, crew is notified via FL V50 N18 (R60) that attitude maneuver is required. The roll attitude about LM Z-axis is undefined, but maintained at orientation resulting from maneuver. The crew may select roll attitude, such as heads up, in response to FL V50 N18. Asterisk (*) indicates priority display. Two-second delay is required before LGC will accept crew response.
		4. Attitude Maneuver Routine (R60)	Automatic attitude maneuvers are more efficient (i.e., propellant-time product is lower) than manual attitude maneuvers.

CREW-MAN	PNL	PROCEDURES	REMARKS
		4.6.1.19 Preferred Tracking Attitude Program (P25) (cont)	
		*FL V50 N18 - Perform desired automatic maneuver to final FDAI angles R1 Roll XXX.XX° R2 Pitch XXX.XX° R3 Yaw XXX.XX° To reject attitude maneuver: When within DAP deadband limits, & further adjustment about desired vector is not desired, Key ENTR, exit R60 To perform attitude maneuver:	If final computed FDAI angles result in ±90° yaw, transformation from IMU to FDAI angles in roll and pitch is indeterminate; R1 and R2 will be zero.
		a. To adjust vehicle attitude & have LGC recompute gimbal angles: Select desired attitude control mode - ACA - maneuver as desired	Adjustment is not possible in all cases, including roll attitude adjustment. Ref para 4.5.1.
	3	S/C: PGNS sw - ATT HOLD Key PRO Return to beginning of step 4.	If GUID CONT sw - PGNS and S/C: PGNS sw - AUTO, LGC commands automatic attitude maneuver.
		b. To perform attitude maneuver manually: Select desired attitude control mode - ACA - maneuver as desired Key PRO Return to beginning of step 4.	Ref para 4.5.1.
		c. To perform attitude maneuver automatically:	Automatic trim maneuver is to be considered essential for maneuvering to thrusting attitudes.
	1	GUID CONT sw - PGNS	
	3	S/C: PGNS sw - AUTO Key PRO Go to step 5.	
		5. If PGNCS automatic selected: DSKY displays are blanked until completion of automatic maneuver. Monitor FDAI belly band, with respect to color band on roll bezel, to avoid gimbal lock.	If desired, Key extended verbs or Key V16 N18 - Final FDAI angles R1 Roll XXX.XX° R2 Pitch XXX.XX° R3 Yaw XXX.XX° Key KEY REL Belly band covers separation between hemispheres of FDAI ball. Belly band, in color bands on each side of FDAI roll bezel, would indicate IMU middle gimbal angle ≥ 75°.

LM 3158, LM 3231

CREW-MAN	PNL	PROCEDURES	REMARKS
		4.6.1.19 Preferred Tracking Attitude Program (P25) (cont)	
		5. To stop LM motion if gimbal lock is approached: S/C: PGNS sw - ATT HOLD If manual override & completion of maneuver is desired: Select desired attitude control mode - ACA - maneuver manually Return to step 4.	During this maneuver, LGC will terminate automatic maneuver if S/C: PGNS sw is switched out of AUTO. Ref para 4.5.1.

G & C GENER

LM 3207, LM 3231

CREW-MAN	PNL	PROCEDURES	REMARKS
		4.6.1.19 Preferred Tracking Attitude Program (P25) (cont)	
		6. To terminate P25:	
		a. To terminate P25 only: Key V56E, go to other program in process.	
		b. To terminate all current programs & routines: Key V34E FL V37 N--- Key V37E 00E, go to LGC Idling Program (P00)	
		4.6.1.20 Fresh Start	Purpose of Fresh Start procedure is to establish computer memory configuration from which normal activity can proceed. (V36 can be used to recover from transient malfunctions.)
		LGC Power-Up (required)	Ref para 4.6.1.1.
		1. Key V36E Poss NO DAP lt - on (momentary) Observe DSKY blanks.	Fresh Start can be initiated as follows: Via program if phase table disagreement is detected following restart. (Alarm code 01107 is stored.); via program if self-check is interrupted by restart during its erasable memory check and erasable memory is suspect; by simultaneously pushing mark REJECT pb and RSET pb during restart (GOJAM) (command engine off); or by DSKY enter of V36E (Commands engine off).
		2. Confer with MSFN to determine whether erasable memory restoration is required.	If V36 interrupted state vector integration, present state vector may not be valid. P27 can be used to restore state vector. Some initialization settings can be changed by performing DAP Data Load Routine (R03) if desired. These settings are as follows (states set by Fresh Start): Undocked, unstaged configuration 2-jet translation (RCS system B) Normal ACA scaling Maximum deadband 2.0°/sec KALCMANU rate
		3. Perform LGC Update Program (P27) if erasable memory restoration is required.	Ref para 4.6.1.7.
		Perform IMU Orientation Determination Program (P51) if REFSMMAT is not acceptable.	Ref para 4.9.1.1.

CREW-MAN	PNL	PROCEDURES	REMARKS
		4.6.1.20 Fresh Start (cont)	
		Perform DAP Data Load Routine (R03) if desired. Key V76E if desired.	Ref para 4.6.1.8. DAPBOOLS (flagwood 13) is set to 21322 (para 4.4.13). If this is not satisfactory, select R03 and reload DAP data.
		Reload HIASCENT: Key V21 N01E 3000E 2324E	V36E will destroy stored erasable values, which therefore must be reloaded. V36E also zeroes channel 77 (restart monitor).
		4.6.1.21 ICDU Zero	Purpose of ICDU Zero procedure is to ensure synchronization of IMU CDU counters in LGC, to terminate IMU coarse align mode, and enter inertial mode. ICDU Zero disables DAP for approximately 12 seconds. Attempts to use V37 to change program during 10.56 seconds after ICDU zero, during which DAP is disabled, will cause PROG lt - on with alarm code 01520 (V37 request not permitted at this time) stored for display with V05 N09E. DAP remains disabled if hardware or software restart occurs while DAP is disabled. To recover, repeat V40 N20E.
		LGC Power-Up (required)	Ref para 4.6.1.1.
		1. Key V40 N20E Poss OPR ERR lt - on Exit V40, key RSET NO DAP lt - on Poss PROG lt - on Key V05 N09E - Call alarm 00206 - Zero encode not allowed with coarse align & gimbal lock Key KEY REL	Poss OPR ERR lt - on if mode change or if gyro torquing is in process.
		Perform ISS Coarse Align	Ref para 4.9.1.3.
		2. NO ATT lt - off NO DAP lt - off Poss PROG lt - on Key V05 N09E - Call alarm 00210 - IMU not on Key KEY REL & RSET, exit V40	NO ATT lt - off indicates that ISS is not in coarse align mode
	1	Poss ISS warn lt - on	ISS warn lt logic is updated at this time. (IMU and ICDU fail discretes previously inhibited are reset.)

LM 3207, LM 3231, LM 3235

CREW-MAN	PNL	PROCEDURES	REMARKS
		4.6.1.22 RR CDU Zero	Purpose of RR CDU Zero procedure is to zero rendezvous radar CDU's, determine (internally) RR antenna mode, and update TRACKER lt.
		LGC Power-Up (required)	Ref para 4.6.1.1.
		LGC Self-Test (desired)	Ref para 4.6.1.13.
		1. Key V40 N72E	RR CDU Zero procedure terminates if RR is in process of being turned on or if reposition flag is set.
		Poss OPR ERR lt - on Exit V40 N72, key RSET	OPR ERR lt - on if read sequence of either radar or RR designate is in process or if another program or routine is using either radar or TRACKFLG is set.
		2. When TRACKER lt is updated, it will go on if any of following has occurred. a. RR CDU fails while in RR automatic mode b. RR data fail	
		Poss PROG lt - on Key V05 N09E - Call alarm 00510 - Radar automatic discrete not present Key KEY REL & RSET	Alarm 00510 is called only when RNDZ RADAR sel is not set to LGC.
		4.6.1.23 Load IMU Attitude Error Meters	Purpose of Load IMU Attitude Error Meters procedure is to display crew-specified angles by FDAI error needles. Procedure can be selected only during LGC Idling Program (P00).
		LGC Power-Up (required)	Ref para 4.6.1.1.
	1	1. Establish PGNCS Attitude Rate/Error Display mode: ATTITUDE MON sw - PGNS RATE /ERR MON sw - LDG RDR/CMPTR	Ref para 4.5.3.2.
	3	2. S/C: PGNS sw - OFF NO DAP lt - on	Switch must be off, for V43 procedure to continue. Switch guard may be moved to side position for duration of time S/C: PGNS sw - OFF.
		3. Key V43E	All registers are initially blank.
		Poss OPR ERR lt - on Exit V43, key RSET	OPR ERR lt - on if S/C: PGNS sw - ATT HOLD or AUTO, IMU is in coarse align, P00 is not operating, or if another extended verb is active.

CREW-MAN	PNL	PROCEDURES	REMARKS
		4.6.1.23 Load IMU Attitude Error Meters (cont)	
		FL V21 N22 - Load error angles R1 OGA XXX.XX° R2 IGA XXX.XX° R3 MGA XXX.XX° Load desired angles To terminate: Key V34E	Maximum angle loaded should be ±5°. Any value exceeding ±5° will peg error needles.
		4. V43 - Error meter load verb Verify specified error angles displayed by FDAI error needles.	
		4.6.1.24 Increment LGC Time	Purpose of Increment LGC Time procedure is to change LGC clock time, using increments loaded by crew.
		LGC Power-Up (required)	Ref para 4.6.1.1.
		1. Key V55E Poss OPR ERR lt - on Exit V55, key RSET	OPR ERR lt - on if another extended verb from R76 is active.
		2. FL V21 N24 - Load Δ clock time R1 00XXX hr R2 000XX min R3 0XX.XX sec Accept: Load desired time increments Reject: Key V33E or V34E, exit V55	All registers are initially blank.
		4.6.1.25 Initialize Erasable Dump Via Downlink	Purpose of Initialize Erasable Dump Via Downlink procedure is to perform nondestructive dump of erasable memory to MSFN.
		LGC Power-Up (required)	Ref para 4.6.1.1.
		Communications Basic (required - near earth)	Ref para 4.13.2.1.
		S-Band Steerable Antenna Activation and Checkout (required - lunar distance)	Ref para 4.2.20.

CREW-MAN	PNL	PROCEDURES	REMARKS
		4.6.1.25 Initialize Erasable Dump Via Downlink (cont)	
		1. Initialize erasable dump: Key V74E	V74 should not be selected during AGS Initialization Routine (R47). V74 will always deliver two complete dumps.
		4.6.1.26 Enable W-Matrix Initialization	Purpose of Enable W-Matrix Initialization procedure is to request reinitialization of rendezvous W-matrix.
			Enable W-Matrix Initialization procedure resets RENDW FLG, which then causes LGC to reinitialize rendezvous W-matrix before next use. Flag is set, following initialization, indicating that it can be used again.
			Initialization is required after period of tracking to ensure nonzero rendezvous radar data weighting. Wait for navigation update for limited period of time.
		LGC Power-Up (required)	Ref para 4.6.1.1.
		1. Key V93E	
		4.6.1.27 ORDEAL Initialization	Purpose of ORDEAL Initialization procedure is to align one or both FDAI's to local vertical coordinates. Procedure can be accomplished using PGNCS or AGS data.
		LGC Power-Up (required for use with PGNCS)	Ref para 4.6.1.1.
		IMU Power-Up (LGC Operating) (required for use with PGNCS)	Ref para 4.6.1.3. ISS should be on 15 minutes before thrusting maneuver.
		IMU Orientation Determination Program (P51) (required for use with PGNCS)	Ref para 4.9.1.1.
		AGS Power-Up (required for use with AGS)	Ref para 4.6.2.1.
		AGS alignment valid (required for use with AGS)	PGNCS/AGS Align (desired)
		AGS state vector valid (required)	Ref para 4.9.2.1 or AGS Lunar Align (para 4.9.3.2), AGS Initialization Routine (R47) (para 4.6.1.18), AGS Manual State Vector Update/Initialization (para 4.6.2.7/ 4.6.2.9).
			IMU and/or AGS must be aligned with +Y-axis of reference along (VXR), where V is velocity vector and R is position vector from center of earth or moon.

CREW-MAN	PNL	PROCEDURES	REMARKS
		4.6.1.27 ORDEAL Initialization (cont)	
		1. Establish total attitude display & ORDEAL controls.	Ref para 4.5.3.1 and/or 4.5.3.3.
		2. Obtain altitude setting by selecting one of following:	
		Orbit Parameter Display Routine (R30)	Ref para 4.8.1.2 (average ha and hp). When R30 is used to determine altitude to be set in step 3, average of ha and hp should be performed.
		Ground Track Determination Program (P21) Obtain altitude setting from MSFN. Use AGS altitude: Key DEDA C 577R (0.1 nm) AGS (hp address 403) (ha address 315)	Ref para 4.8.1.1 (for circular orbit).
		3. ORDEAL: ALT SET cont - adjust to setting determined in step 2	
		4. Damp LM rates - select desired attitude control mode	Ref para 4.5.1.
		5. Obtain pitch angle to local horizontal. If PGNCS data required: Key V83E - Request Rendezvous Parameter Display Routine (R31)	Ref para 4.6.1.11.
		6. Poss OPR ERR lt - on (if another extended verb running) Exit R31, key RSET FL V16 N54 R1 Range XXX.XX nm R2 Range rate XXXX.X fps R3 θ XXX.XX° To terminate R31: Key PRO If AGS data desired: Key DEDA C 277R (0.01°)	θ (LGC) and ξ (DEDA) is angle between +Z-axis and local horizontal plane.
		7. ORDEAL: MODE sw - HOLD/FAST SLEW sw - UP, center, DOWN (as required for coarse alignment of proper angles at right)	θ or ξ is from 0° to 360°. (Fast rate is approximately X200 orbit rate.)
		8. ORDEAL: MODE sw - OPR/SLOW SLEW sw - UP, center, DOWN (fine-adjust FDAI precisely)	

CREW-MAN	PNL	PROCEDURES	REMARKS
		4.6.1.28 LGC Erasable Memory Display/Update	This procedure may be performed in P00 only.
		LGC Power-Up (required)	Ref para 4.6.1.1.
		LGC Self-Test (desired)	Ref para 4.6.1.13.
		1. Key V37E 00E	
		2. Review erasable memory: Key V01 N01E FL V01 N01 R1 ----- R2 ----- R3 ----- Key desired register address (octal) Key ENTR	
		3. V01 N01 R1 Register content R2 ----- R3 Register address	
		4. To review next register: Key N15E	
		5. V01 N15 R1 Register content R2 ----- R3 Register address Key ENTR for each succeeding register	
		6. To change data in erasable memory: Key V21 N01E FL V21 N01 R1 ----- R2 ----- R3 ----- Key desired register address (octal) Key ENTR	

LM 999, LM 3207, LM 3231

CREW-MAN	PNL	PROCEDURES	REMARKS
		4.6.1.28 LGC Erasable Memory Display/Update (cont)	
		7. V21 N01 R1 Register content R2 ----- R3 Register address Load desired data. Key ENTR	R1 blank until loaded
		8. To change next register: Key N15E	
		9. V21 N15 R1 Register content R2 ----- R3 Register address Load desired data Key ENTR for each succeeding register.	R1 blank until loaded
		10. Repeat steps 2 thru 5 to verify correct loading of data.	
		4.6.1.29 Restart	Purpose of Restart procedure is to cause computer restart.
		LGC Power-Up (required)	Ref para 4.6.1.1.
		1. Key V69E - Restart RESTART lt - on NO DAP lt - on (momentary)	V69E does not select restart directly. Instead, it brings about "hardware" restart; i.e., it executes too many consecutive TC instructions (tight loop). Initially, all registers are blank unless restartable display is present when restart occurs.
		Poss PROG lt - on Key V05 N09E 01107 - Bad phase table	If alarm code is 01107, Fresh Start is automatically initiated. (Ref para 4.6.1.20.)
		2. Confer with MSFN to determine whether restoration of erasable memory is required.	
		3. To restore erasable memory: Select LGC Update Program (P27).	Ref para 4.6.1.7.

CREW-MAN	PNL	PROCEDURES	REMARKS
		4.6.1.29 Restart (cont)	
		4. Perform IMU Orientation Determination Program (P51) & IMU Realign Program (P52), if required.	Ref para 4.9.1.1; reestablishes REFSMMAT. Ref para 4.9.1.2.
		5. Deleted	
		4.6.1.30 S-Band Antenna Routine (R05)	Purpose of S-Band Antenna Routine (R05) is to compute and display the two steerable S-band antenna gimbal angles, which will point it toward center of earth (for use in lunar orbit).
		LGC Power-Up (required)	Ref para 4.6.1.1.
		LGC Self-Test (desired)	Ref para 4.6.1.13.
		LGC time valid (required)	LGC/CMC Clock Synchronization Routine (R33) (para 4.6.1.15)
		LGC state vector valid (required)	LGC Update Program (P27) (para 4.6.1.7) and, when possible, LM Rendezvous Navigation Program (P20) (para 4.8.2.1). (If P20 is operating, radar sighting marks will automatically be made approximately once per minute.)
		IMU Power-Up (LGC operating) (required)	Ref para 4.6.1.3. ISS should be on 15 minutes before thrusting maneuver.
		IMU Orientation Determination Program (P51) (required)	Ref para 4.9.1.1.
		1. Key V64E Poss OPR ERR lt - on Exit R05, key RSET	OPR ERR lt - on if another extended verb from R76 is active.
		2. FL V06 N51 R1 Pitch XXX.XX° R2 Yaw XXX.XX° R3 -----	<-90° α <+270° (pitch angle). <-90° β <+90° (yaw angle). Display limits are angle conventions, not hardware limits.
		Evaluate pitch & yaw angles with respect to vehicle obstruction to antenna, LOS to earth center. To exit R05: Key PRO To obtain more desirable antenna angles: Maneuver vehicle, using ACA.	
		3. Set S-band antenna to displayed angles: Key PRO	Ref para 4.2.20.

G & C GENERA

CREW-MAN	PNL	PROCEDURES	REMARKS
		4.6.1.31 Interrupt Integration	Purpose of Interrupt Integration procedure is to suspend state vector integration.
		LGC Power-Up (required)	Ref para 4.6.1.1.
		1. Key V96E Verify PROG ind - 00	Selecting Interrupt Integration procedure terminates program in process and selects P00. P00 state vector integration is bypassed until new program is selected. This does not maintain state vector synchronization; therefore, incorrect W-matrix extrapolation may occur if V96E is performed: (1) during P20 mark processing, but only if CSM state vector is being updated (V81 in effect) or (2) during AVETOMID, i.e., after responding to FL V37 when leaving program where average-g was on, but before program lights change. To recover: for item (1) - none required, for item (2) key V93E.
		4.6.1.32 Mode I Attitude Error Display	Mode I displays DAP following attitude errors on FDAI error needles (difference between current CDU angles and DAP commanded angles).
		LGC Power-Up (required)	Ref para 4.6.1.1.
		IMU Power-Up (LGC Operating) (required)	Ref para 4.6.1.3.
	1	1. Select PGNCS Attitude Rate/Error Display: ATTITUDE MON sw - PGNS RATE/ERR MON sw - LDG RDR/CMPTR	Ref para 4.5.3.2.
		2. Key V61E	
		4.6.1.33 Mode II Attitude Error Display	Mode II displays total attitude error (N22-N20) on FDAI error needles. Mode II is automatically selected by LGC program and routine; e.g., (R60).
		LGC Power-Up (required)	Ref para 4.6.1.1.
		IMU Power-Up (LGC Operating) (required)	Ref para 4.6.1.3.

LM 3231

CREW-MAN	PNL	PROCEDURES	REMARKS
		4.6.1.33 Mode II Attitude Error Display (cont)	
		1. Select PGNCS Attitude Rate/Error Display: ATTITUDE MON sw - PGNS RATE/ERR MON sw - LDG RDR/CMPTR	Ref para 4.5.3.2.
		2. Key V62E	
		4.6.1.34 W-Matrix Error Display	The purpose of this procedure is to display W-matrix error information and provide means of reinitializing W-matrix if desired.
		LGC Power-Up (required)	Ref para 4.6.1.1.
		1. Key V67E Poss OPR ERR lt - on Exit V67, key RSET	OPR ERR lt - on if another extended verb from R76 is active.
		2. FL V06 N99 - Position & velocity errors R1 RSS in position XXXXX ft R2 RSS in velocity XXXX.X fps R3 RSS in bias XXXXX mrad	Position, velocity, and bias values are initialization values for each diagonal element of the appropriate submatrix.
		Reject: Key V25E - Load desired values, or key V34E Accept: Key PRO	If new data are loaded and accepted, W-matrix is reinitialized, using loaded data.
		4.6.1.35 Move This Vehicle State Vector to Other State Vector	This extended verb transfers CSM state vector data (in LGC) to LM state vector. Meaningful only when spacecraft are docked or station-keeping.
		LGC Power-Up (required)	Ref para 4.6.1.1.
		1. Key V66E Poss OPR ERR lt - on Exit V66, key RSET	OPR ERR lt - on if this extended verb is used when on lunar surface.

CREW-MAN	PNL	PROCEDURES	REMARKS
		4.6.1.36 <u>Final Automatic Request Terminate Routine (R00)</u>	Purpose of Final Automatic Request Terminate Routine (R00) is to provide standard exit for programs, and option to select any desired program. This procedure also provides description of activity following any V37E XXE.
		LGC Power-Up (required)	Ref para 4.6.1.1.
		1. If R00 is selected by LGC: FL V37 N-- Please perform change of program R1 ----- R2 ----- R3 ----- Key XXE Flashing terminates upon receipt of XXE. Go to step 3.	Assumption: Calling program has successfully completed all its functions or crewman has prematurely terminated program.
		2. If R00 is selected by crew: Key V37E XXE	
		3. If desired program is P70 or P71: Exit R00 (Go to desired program.)	
		4. If desired program is not P70 or P71: Poss PROG lt - on Key V05 N09E - Call alarm 01520	Alarm 01520 indicates (1) IMU is being initialized or (2) program other than P00 has been selected and change of program is disallowed at this time.
		Exit R00 Key KEY REL & RSET PROG lt - off	

RC 1602, LM 3231

CREW-MAN	PNL	PROCEDURES	REMARKS
		4.6.1.37 Erasable Modification Routine (R01)	Purpose of Erasable Modification Routine is to provide manual capability of changing flagword and channel bits. It is not restricted to flagwords, but can modify any legitimate erasable location.
		1. Key V25 N07E R1 (octal) ECADR of erasable location R2 (octal) Bit identification - five digits specifying bits in word to be modified R3 (octal) Action positive nonzero (or nonblank) indicates "1" is to be set into bit positions specified in R2. Zero or blank indicates "0".	R1 is channel location if 30g or below. Octal representation of binary word using binary 1's in bit positions to be modified. Specifically: octal numbers (0000) 1 through 37777 are interpreted as positive nonzero and cause one(s) to be set in bit positions specified in R2; and octal numbers 77777 through 40000 are interpreted as negative and they as well as (0000) 0 and blank cause zero(s) to be set in bit positions specified in R2.
		4.6.1.38 Input ΔRLS for Pinpoint Landing	Purpose of this procedure is to provide a flexible method for crew modification of RLS (in stable member (SM) coordinates, based on latest state vector data) for pinpoint landing.
		LGC Power Up (required)	Ref para 4.6.1.1.
		LGC state vector and landing site vector valid (required)	LGC Update Program (P27) (para 4.6.1.7)
		Communication with MSFN (required)	May be performed as follows: 1. Before selection of P63 (ignition time will be adjusted). 2. In P63 before throttle-up (inputs must be moderate in magnitude - possible small attitude transient at throttle-up). 3. In P63 after throttle-up (inputs must be moderate in magnitude - possible small attitude transient).
		1. Receive & record ΔRLS from MSFN.	
		2. Load ΔRLS Key V25 N69E R1 ΔZ XXXXX ft R2 ΔY XXXXX ft R3 ΔX XXXXX ft	 ΔZ - downrange in SM coordinates. ΔY - crossrange in SM coordinates. ΔX - approximate altitude in SM coordinates. If P63 is reselected, above procedure must be repeated.

LM 3231

CREW-MAN	PNL	PROCEDURES	REMARKS
		4.6.1.39 DSKY 88888 Clear 1. Perform following DSKY entries: V99 N99 V25 N01E 00000E +99999E +99999E +99999 CLR, CLR, CLR 00000E 00000E 00000E In event of operator error or if DSKY does not clear, repeat procedure.	This procedure attempts to clear DSKY relay contamination that is possible cause of short that could light all segments of the DSKY EL numbers (appearing as 8's and +'s).

CREW-MAN	PNL	PROCEDURES	REMARKS
		4.6.2 AGS/CES	
		4.6.2.1 AGS Power-Up	Purpose of AGS Power-Up procedure is to power up AGS and to allow for ASA warmup and stabilization. CB S/C: ASA - close (required from prelaunch).
		CAUTION Do not power up AGS if LMP bus voltage <26.5 vdc. Allow at least 1 second between settings of AGS STATUS sw and CB S/C: AEA.	DC BUS warn lt - on if LMP bus voltage is <26.5 vdc. Rapid cycling could destroy AEA memory.
CDR LMP	11 16	1. CB S/C: AEA - open CB S/C: AEA - open	
	6	AGS STATUS sw - OFF	
		Disable AGS attitude control:	Avoids possible attitude transients during power-up.
CDR	1	GUID CONT sw - PGNS or	
	3	S/C:	
		AGS sw - OFF	LM is free to drift.
		or	
		ROLL, PITCH, & YAW sw - PULSE or DIRECT	LM is free to drift.

CREW-MAN	PNL	PROCEDURES	REMARKS
		4.6.2.1 AGS Power-Up (cont)	
LMP	6	2. AGS STATUS sw - STAND BY	
CDR	1	AGS warn lt - on	AGS CWEA inhibit is removed and ASA voltage is low due to absence of AEA clock.
	1, 2	MASTER ALARM - on	
	1/2	MASTER ALARM pb/lt - reset	
LMP	16	3. CB S/C: AEA - close	Within 20 seconds, AEA can accept CDU discrete from PGNCS and can integrate PGNCS Euler angle increments.
		Note time or start EVNT TMR ind.	Following CB S/C: AEA - close, ASA requires 25 minutes of operation with AGS STATUS sw - STAND BY or OPERATE to stabilize sufficiently for nominal AGS operation. Under emergency conditions, AGS operation with degraded performance is available: Five minutes after ASA activation (CB S/C: AEA close and AGS STATUS SW - STANDBY or OPERATE) provided that, prior to this time, the CB S/C ASA had been closed and AGS STATUS SW - OFF (defined as warm-up mode) for at least 8.5 minutes with coolant flowing (and the ASA initially assumed at the coolant temperature of 40°F). Only 4 minutes are required in the warm-up mode prior to ASA activation for no coolant flow (with an initial assumed nominal ASA temperature of at least 60°F). For this case coolant flow must be initiated at or before ASA activation.
CDR	1	AGS warn lt - off	
		4. Positioning of AEA backup power cb:	
		If PGNCS operating normally:	AEA backup cb should normally be open to prevent sneak path for transient or loss of both power buses due to a single failure; it should be closed if PGNCS fails.
	11	CB S/C: AEA - open	
		If PGNCS fails:	
	11	CB S/C: AEA - close	
		5. 25 min after step 3:	
	11	CB/AC BUS B: AGS - close	

CREW-MAN	PNL	PROCEDURES	REMARKS
		4.6.2.1 AGS Power-Up (cont)	
LMP	6	AGS STATUS sw - OPERATE	
	1,2	MASTER ALARM - on	
	1/2	MASTER ALARM pb/lt - reset	
	1	AGS warn lt - on	AGS warn lt latches on (caused initially by core-priming operation, which, when performed, interferes with program inhibit of hardware alarm). AEA initial state: 1. Engine-off is present. 2. 400, and 410 through 417, are set to 00000.
LMP	2	O2/H2O QTY MON sel - C/W RESET	O2/H2O QTY MON sel should not remain in C/W RESET position. It performs its reset function only at time it is switched into C/W RESET position.
	1	AGS warn lt - off	
	2	O2/H2O QTY MON sel - previous position	
		Key DEDA C 412R+10000	412+10000 indicates self-test was successful.
		6. Perform AEA Readiness Check.	Ref para 4.6.2.12.
		4.6.2.2 AGS Power-Down	
		AGS Power-Up (required)	Ref para 4.6.2.1
LMP CDR	16 11	1. CB S/C: AEA - open CB S/C: AEA - open	CB S/C: AEA is to be opened before AGS STATUS sw - STAND BY. This eliminates detrimental effects of switch closure bounce.
	1	AGS warn lt - on	AGS warn lt - on because ASA voltage is low due to absence of AEA clock.
	1,2	MASTER ALARM - on	
	1/2	MASTER ALARM pb/lt - reset	
LMP	6	2. AGS STATUS sw - STAND BY	
		3. AGS STATUS sw - OFF AGS warn lt - off	
CDR	11	4. CB/AC BUS B: AGS - open	

CREW-MAN	PNL	PROCEDURES	REMARKS
		4.6.2.3 AEA Self-Test	Purpose of AEA Self-Test procedure is to verify correct operation of AEA self-test/CWEA interface, and AEA normal and backup d-c power systems.
		AGS Power-Up (required)	Ref para 4.6.2.1.
		1. Check AEA self-test status:	
LMP	16	CB S/C: AEA - close	
CDR	11	CB S/C: AEA - open	
		Key DEDA C 412R+X0000	X = 1, X = 3, X = 4, X = 7
		If +10000 displayed, go to step 3.	AGS warn lt - on within 5 to 30 seconds of initializing or reinitializing self-test (412+00000) if self-test result code stored in 412 is not +10000.
		2. Reinitiate AEA self-test:	
		Key DEDA C 412+00000E	AGS is operating correctly if self-test output is 412+10000.
		Repeat readout after approx 15 sec:	
		Key DEDA C 412R	
		CAUTION If +10000 is not stored & displayed within 15 sec, AGS computer operations are not recommended. If +00000 remains after 15 sec, test is not being executed.	
		3. Check AEA self-test/CWEA interface:	
		Provide AEA self-test output to CWEA -	
		Key DEDA C 412+70000E	
	1/2	MASTER ALARM pb/lt - reset	
	1	AGS warn lt - on	
	2	O2/H2O QTY MON sel - C/W RESET	
	1	AGS warn lt - off	
	2	O2/H2O QTY MON sel - previous position	
		4. Reinitiate AEA self-test:	
		Key DEDA C 412+00000E	
		Key DEDA C 412R+10000	
		5. Test AEA backup power system:	
CDR	11	CB S/C: AEA - close	
LMP	16	CB S/C: AEA - open	
CDR	1	AGS warn lt - off	AGS warn lt - on and latched indicates failure in AEA backup power system.

CREW-MAN	PNL	PROCEDURES	REMARKS
		4.6.2.3 AEA Self-Test (cont)	
		6. Configure AEA d-c backup power:	AEA backup cb should normally be open; it should be closed if PGNCS fails.
		If PGNCS operating normally:	
LMP	16	CB S/C: AEA - close	
CDR	11	CB S/C: AEA - open	
		If PGNCS fails:	
LMP	16	CB S/C: AEA - close	
CDR	11	CB S/C: AEA - close	
		4.6.2.4 AGS Checkout	Purpose of AGS Checkout procedure is to verify correct operation of AEA and DEDA electroluminescent displays and pushbutton lights.
		AGS Power-Up (required)	Ref para 4.6.2.1.
		1. Perform EL lamp check:	
		Key DEDA C 000+888888	
		Verify:	
		OPR ERR lt - on	OPR ERR lt - on because more than nine pushbuttons have been keyed since last keying CLR pb.
		000 in address indicator	
		+88888 in data indicator	
		2. Complete pushbutton check:	
		Key DEDA C 123-45679C	
		OPR ERR lt - off	
		3. Perform AEA Readiness Check.	Ref para 4.6.2.12.
		4.6.2.5 AGS Gyro & Accelerometer Calibration	Purpose of AGS Gyro and Accelerometer Calibration procedure is to perform in-flight gyro and accelerometer calibration with PGNCS IMU operating. AGS alignment in-flight calibration may be performed provided IMU has been aligned (IMU Orientation Determination Program, P51).
		LGC Power-Up (required)	Ref para 4.6.1.1.
		IMU Power-Up (LGC Operating)/IMU Power-Up (LGC Off)	Ref para 4.6.1.3/4.6.1.4. ISS should be on 15 minutes before thrusting maneuver.
		IMU Orientation Determination Program (P51) (desired)	Ref para 4.9.1.1.
		AGS Power-Up (required)	Ref para 4.6.2.1.

LM 3207, LM 3231

CREW-MAN	PNL	PROCEDURES	REMARKS
		4.6.2.5 AGS Gyro & Accelerometer Calibration (cont)	
		AGS Checkout (desired)	Ref para 4.6.2.4.
		Communications Basic (desired - near earth)	Ref para 4.13.2.1.
		S-Band Steerable Antenna Activation and Checkout (desired - lunar distance)	Ref para 4.2.20.
		1. Establish desired attitude control mode from following:	
		a. AGS Attitude Hold/Rate Command:	Ref para 4.5.1.6.
	1	GUID CONT sw - AGS	
	3	S/C:	
		AGS sw - ATT HOLD	
		ROLL, PITCH, & YAW sw - MODE CONT	
	1	ENG THR CONT: BAL CPL sw - ON	
	3	S/C: DEAD BAND sw - MAX	
		b. PGNCS Attitude Hold/Rate Command	Ref para 4.5.1.3.
	1	GUID CONT sw - PGNS	
	3	S/C:	
		PGNS sw - ATT HOLD	
		ROLL, PITCH, & YAW sw - MODE CONT	
		Key V77E	
		NO DAP lt - off	
		c. During docked flight, request that CSM maintain attitude hold. Establish attitude control mode -	Ref para 4.5.1.7.
		AGS pulse:	
		GUID CONT sw - AGS	
		S/C: AGS sw - AUTO or ATT HOLD	
		ROLL, PITCH, & YAW sw - PULSE	
		ENG THR CONT: BAL CPL sw - ON	
		AGS direct:	Ref para 4.5.1.8.
		GUID CONT sw - AGS	
		S/C: AGS sw - AUTO or ATT HOLD	
		ROLL, PITCH, & YAW sw - DIR	
		ENG THR CONT: BAL CPL sw - ON	
		PGNCS minimum impulse:	Ref para 4.5.1.4.
		GUID CONT sw - PGNS	
		S/C: PGNS sw - ATT HOLD	
		ROLL, PITCH, & YAW sw - MODE CONT	
		Key V76E	

LM 3207, LM 3231

CREW-MAN	PNL	PROCEDURES	REMARKS
		4.6.2.5 AGS Gyro & Accelerometer Calibration (cont) 2. Read out & record gyro and accelerometer bias-compensation coefficients: X-accelerometer Key DEDA C 540R (0.001/0.01 fps sq) Y-accelerometer Key DEDA C 541R (0.001/0.01 fps sq) Z-accelerometer Key DEDA C 542R (0.001/0.01 fps sq) X-gyro Key DEDA C 544R (0.01°/hr) Y-gyro Key DEDA C 545R (0.01°/hr) Z-gyro Key DEDA C 546R (0.01°/hr)	Parenthetical quantization notation: lunar mission/ earth mission.

G & C
GENER

LM 3207, LM 3208

CREW-MAN	PNL	PROCEDURES	REMARKS
		4.6.2.5 AGS Gyro & Accelerometer Calibration (cont)	
		3. Establish attitude control mode from following:	
		a. AGS pulse	In first 30 seconds of this mode, AGS accelerometers are calibrated; this requires that RCS be inhibited for best performance. RCS can be inhibited by S/C: AGS sw - OFF. Ref para 4.5.1.7.
	1	GUID CONT sw - AGS	
	3	S/C:	
		AGS sw - AUTO or ATT HOLD	
		ROLL, PITCH, & YAW sw - PULSE	
		DEAD BAND sw - MAX or MIN	
	1	ENG THR CONT: BAL CPL sw - ON	
		b. AGS direct	Ref para 4.5.1.8.
		GUID CONT sw - AGS	
	3	S/C:	
		AGS sw - AUTO or ATT HOLD	
		ROLL, PITCH, & YAW sw - DIRECT	
		DEAD BAND sw - MAX or MIN	
	1	ENG THR CONT: BAL CPL sw - ON	
		c. PGNCS minimum impulse	Ref para 4.5.1.4.
		GUID CONT sw - PGNS	
	3	S/C:	
		PGNS sw - ATT HOLD	
		ROLL, PITCH, & YAW sw - MODE CONT	
		Key V76E	
		NO DAP lt - on	
		d. During docked flight, request that CSM maintain drifting flight.	
		4. Establish attitude & exercise ICDU fine-align switches.	This step eliminates possibility of degraded AGS gyro calibration due to coarse or fine ICDU switching transients.
		a. Monitor ICDU angles	
		Key V16 N20E	
		R1 OGA XXX.XX°	
		R2 IGA XXX.XX°	
		R3 MGA XXX.XX°	
		b. Obtain desired ICDU angles by either of following:	
		(1) Maneuver LM via ACA until DSKY display of ICDU angles reads approx 22.5° or desired odd multiple of 22.5°.	
		(2) Request that CSM maneuver until DSKY display of ICDU angles reads approx 22.5° or desired odd multiple of 22.5°.	
		c. Perform ICDU Zero procedure.	Ref para 4.6.1.21.
		d. Establish free drift rate of <0.075°/sec for docked flight; <0.1°/sec, for undocked flight.	
		Display LM attitude rates on FDAI error needles:	
		Key V60E	

LM 3231

CREW-MAN	PNL	PROCEDURES	REMARKS
		4.6.2.5 AGS Gyro & Accelerometer Calibration (cont)	
		5. Command gyro-accelerometer calibration: Key DEDA C400+60000E	If AGS is removed from calibrate mode before 32 seconds, initial value of accelerometer constants will be maintained.
		6. Display one gyro bias compensation coefficient from following: X-gyro Key DEDA C 544R (0.01°/hr) Y-gyro Key DEDA C 545R (0.01°/hr) Z-gyro Key DEDA C 546R (0.01°/hr)	Readout of gyro bias-compensation coefficient places this quantity on AGS downlink (if lunar telemetry is established and COMM: TLM PCM sw - HI) to aid ground evaluation of calibration.
		7. Verify calibration complete: Key DEDA C 400R+00000	Display should appear within 302 seconds.
		8. Read out & record gyro & accelerometer bias-compensations coefficients: X-accelerometer Key DEDA C 540R (octal) Y-accelerometer Key DEDA C 541R (octal) Z-accelerometer Key DEDA C 542R (octal) X-gyro Key DEDA C 544R (0.01°/hr) Y-gyro Key DEDA C 545R (0.01°/hr) Z-gyro Key DEDA C 546R (0.01°/hr)	If AGS is removed from calibrate mode before 302 seconds, updated gyro constants will be used by AGS. If calibrate mode is exited before 180 seconds, reload initial gyro-calibration constants. Readout of these quantities places them on AGS downlink. If prelaunch specified failure limits on change in bias-compensation coefficients are exceeded, reload initial bias-compensation coefficients after concurrence from MSFN.
		4.6.2.6 AGS Manual Absolute Time Initialization	Purpose of AGS Manual Absolute Time Initialization procedure is to provide specific base time value from which time incrementing continues (LGC not operating).
		AGS Power-Up (required)	Ref para 4.6.2.1
		AGS Checkout (desired)	Ref para 4.6.2.4
		MSFN receiving AGS telemetry (LM in LOS to MSFN)	
		Communications Basic (required - near earth)	Ref para 4.13.2.1.

G & C GENERAL

CREW-MAN	PNL	PROCEDURES	REMARKS
		4.6.2.6 AGS Manual Absolute Time Initialization (cont)	
		S-Band Steerable Antenna Activation (High Power) (required - lunar distance)	Ref para 4.2.20.
		1. Enter initial value in AGS time address: Key DEDA C 377+XXXXX (0.1 min)	Select convenient AGS time bias (e.g., in tens of hours), subtract AGS time bias from planned time of AEA ENTR (in GET), and convert remainder to tenths of minutes for DEDA entry of initial value (XXXXX).
		Key DEDA ENTR	Entry to be made at planned time of AEA ENTR.
		2. Receive & record AGS time bias from MSFN (GET minus AGS time).	MSFN obtains difference via ground checks and AGS telemetry.
		4.6.2.7 AGS Manual LM State Vector Update/Initialization	
		AGS Power-Up (required)	Ref para 4.6.2.1.
		AGS Checkout (desired)	Ref para 4.6.2.4.
		AGS Calibration/AGS Initialization Routine (R47) (required)	Ref para 4.6.2.5 or 4.6.1.18. AEA clock overflows 4396 minutes (approximately 73 hours) after initialization at zero.
		1. Obtain LM state vector & epoch time from MSFN, and reset DEL 32 (Downlink Initialize Flag) C563 + 00000E	Minus is set, plus is reset. Resetting DEL 32 and completing manual state vector update before re-initiating AGS automatic rendezvous radar LM state vector update (Raw Data Transfer via LGC) para 4.8.2.3 avoids possible anomolous state vector update.
		CAUTION State vector is invalid if LM thrusting occurs between epoch point & update time, or if this time exceeds 136.5 min.	
		2. Enter X-component of LM position: Key DEDA C 240±XXXXXE (100/1000 ft)	Parenthetical quantization notation: lunar mission/earth mission.
		3. Enter Y-component of LM position: Key DEDA C 241±XXXXXE (100/1000 ft)	
		4. Enter Z-component of LM position: Key DEDA C 242±XXXXXE (100/1000 ft)	
		5. Enter X-component of LM velocity: Key DEDA C 260±XXXXXE (0.1/1 fps)	

CREW-MAN	PNL	PROCEDURES	REMARKS
		4.6.2.7 AGS Manual LM State Vector Update/Initialization (cont)	
		6. Enter Y-component of LM velocity: Key DEDA C 261±XXXXXE (0.1/1 fps)	
		7. Enter Z-component of LM velocity: Key DEDA C 262±XXXXXE (0.1/1 fps)	
		8. Enter LM epoch time: Key DEDA C 254+XXXXXE (0.1 min)	
		CAUTION Epoch data should be valid for exact AGS time indicated. Epoch time for updates when LM is on lunar surface should be within 0.5 hr of nominal lift-off.	Entry errors (steps 2 through 8) may be corrected any time before step 9. If data are not valid for exact 0.1 minute indicated, errors of 3 miles (lunar mission) or 12 miles (earth mission) or more could result.
		9. Command AEA to update LM state vector: Key DEDA C 414+20000E	
		10. Verify LM state vector update complete: Key DEDA C 414R+00000	Display should appear within 2 seconds after step 9.
		4.6.2.8 Load AGS Contingency LM Lunar Touchdown State Vector	This procedure shall be performed approximately 7 minutes before PDI (after state vector update), to prepare AGS for immediate ascent after LM touchdown (accomplished by keying DEDA C 414+20000E to update AGS state vector to values in procedure). This procedure may also be performed at any time on lunar surface when LGC is not available for AGS state vector update (R47).
		AGS Power-Up (required)	Ref para 4.6.2.1.
		AGS Checkout (desired)	Ref para 4.6.2.4.
		AGS time valid (required)	AGS Manual Absolute Time Initialization (para 4.6.2.6) or AGS Initialization Routine (R47) (para 4.6.1.18).
		1. Read out landing site radius: Key DEDA C 231R (100 ft)	

CREW-MAN	PNL	PROCEDURES	REMARKS
		4.6.2.8 Load AGS Contingency LM Lunar Touchdown State Vector (cont)	
		Enter contents of address 231 into X-component of LM position: Key DEDA C 240+XXXXXE (100 ft)	
		Enter estimated time of touchdown +6 min. (AGS absolute time of landing +X for TD+X aborts): Key DEDA C 254+XXXXXE (0.1 min)	To achieve satisfactory pericynthion, value entered in 254 should be ±6 minutes of lift-off.
		Enter lunar rotation rate: Key DEDA C 261+YYYYYE (0.1 fps) Key DEDA C 262-ZZZZZE (0.1 fps)	YYYYY=15.2 sin (i) ZZZZZ=15.2 cos (i) i=angle (measured clockwise) from west to AGS Z-axis
		4.6.2.9 AGS Manual CSM State Vector Update/Initialization	
		AGS Power-Up (required) AGS Checkout (desired) AGS Calibration/AGS Initialization Routine (R47) (required)	Ref para 4.6.2.1. Ref para 4.6.2.4. Ref para 4.6.2.5/4.6.1.18. AEA clock overflows 4396 minutes (approximately 73 hours) after initialization at zero.
		1. Obtain CSM state vector & epoch time from MSFN, and reset DEL 32 (Downlink Initialize Flag) C563+00000E CAUTION State vector is invalid if CSM thrusting occurs between epoch point & update time, or if time exceeds 136.5 min.	Minus is set, plus is reset. Resetting DEL 32 and completing manual state vector update before re-initiating AGS automatic rendezvous radar LM state vector update (Raw Data Transfer via LGC) para 4.8.2.3. avoids possible anomalous state vector update.
		2. Enter X-component of CSM position: Key DEDA C 244±XXXXXE (100/1000 ft)	Parenthetical quantization notation: lunar mission/earth mission.
		3. Enter Y-component of CSM position: Key DEDA C 245±XXXXXE (100/1000 ft)	
		4. Enter Z-component of CSM position: Key DEDA C 246±XXXXXE (100/1000 ft)	
		5. Enter X-component of CSM velocity: Key DEDA C 264±XXXXXE (0.1/1 fps)	
		6. Enter Y-component of CSM velocity: Key DEDA C 265±XXXXXE (0.1/1 fps)	

CREW-MAN	PNL	PROCEDURES	REMARKS
		4.6.2.9 AGS Manual CSM State Vector Update/Initialization (cont)	
		7. Enter Z-component of CSM velocity: Key DEDA C 266±XXXXXE (0.1/1 fps)	
		8. Enter CSM epoch time: Key DEDA C 272±XXXXXE (0.1 min)	
		CAUTION CSM epoch time must be a valid past-AGS time at multiple of 0.1 min.	Entry errors (steps 2 through 8) may be corrected any time before step 9.
		9. Command AEA to update CSM state vector: Key DEDA C 414+30000E	
		10. Verify CSM state vector update complete: Key DEDA C 414R+00000	Display should appear within 2 seconds after step 9.
		4.6.2.10 Deleted	

G & C GENERA

CREW-MAN	PNL	PROCEDURES	REMARKS
		4.6.2.11 Rate Gyro Check	Rate Gyro Check procedure is to be accomplished only under PGNS control.
		1. Set controls for checkout:	Complete checkout if abnormal condition is noted at any point. Check any additional abnormalities before proceeding to malfunction diagnostic.
	16	CB S/C: ATCA (AGS) - close	
	1	RATE SCALE sw - 25°/SEC	
	3	S/C: GYRO TEST POS RT sw - OFF	
		2. S/C:	
		GYRO TEST ROLL sw - ROLL	
		GYRO TEST POS RT sw - POS RT & HOLD	
	1,2	FDAI roll rate ind - +5°	
	3	S/C: GYRO TEST ROLL sw - PITCH	
	1,2	FDAI pitch rate ind - +5°	
	3	S/C: GYRO TEST ROLL sw - YAW	
	1,2	FDAI yaw rate ind - +5°	
	3	S/C: GYRO TEST POS RT sw - NEG RT & HOLD	
	1,2	FDAI yaw rate ind - -5°	
	3	S/C: GYRO TEST ROLL sw - PITCH	
	1,2	FDAI pitch rate ind - -5°	
	3	S/C: GYRO TEST ROLL sw - ROLL	
	1,2	FDAI roll rate ind - -5°	
	3	S/C: GYRO TEST POS RT sw - OFF	
	1	3. RATE SCALE sw - 5°/SEC	
	3	GYRO TEST POS RT sw - POS RT & HOLD	
	1,2	FDAI roll rate ind - +5°	
	3	S/C: GYRO TEST ROLL sw - PITCH	
	1,2	FDAI pitch rate ind - +5°	
	3	S/C: GYRO TEST ROLL sw - YAW	
	1,2	FDAI yaw rate ind - +5°	

LM 2013

CREW-MAN	PNL	PROCEDURES	REMARKS
		4.6.2.11 Rate Gyro Check (cont)	
	3	S/C: GYRO TEST POS RT sw - NEG RT & HOLD	
	1,2	FDAI yaw rate ind - -5°	
	3	S/C: GYRO TEST ROLL sw - PITCH	
	1,2	FDAI pitch rate ind - -5°	
	3	S/C GYRO TEST ROLL sw - ROLL	
	1,2	FDAI roll rate ind - -5°	
	3	S/C: GYRO TEST POS RT sw - OFF	
		4.6.2.12 AEA Readiness Check	Purpose of AEA Readiness Check procedure is to verify status of AEA descent-section staging flag, lunar surface flag, and staging sequence counter.
		AGS Power-Up (required)	Ref para 4.6.2.1.
		AGS Self-Test (required)	Ref para 4.6.2.3.
		1. Descent section staging flag status check: Key DEDA C 574R Negative number = staged; positive number = unstaged If incorrect: Key DEDA C 574+00000E (if unstaged); or -00000E (if staged)	
		2. Lunar surface flag status check: Key DEDA C 604R Negative number = on lunar surface; positive number = not on lunar surface If incorrect; Key DEDA C 604+00000E if not on lunar surface; or -00000E if on lunar surface.	-00000 - on lunar surface +00000 - not on lunar surface
		3. Staging sequence counter status check: Key DEDA C 612R If unstaged & +00000 not displayed: Key DEDA C 612+00000E If staged & +00006 not displayed: Key DEDA C 612+00007E	

LM 3231

CREW-MAN	PNL	PROCEDURES	REMARKS
		4.6.2.13 AGS Orientation to Initial Computed Steering Attitude	Purpose of AGS Orientation to Initial Computed Steering Attitude procedure is to offer crew minimum fuel option or minimum time option for AGS orientation to initial computed steering attitude. The normally used minimum fuel option is presented first in a continuous and complete format. The minimum time option and other available procedural choices are presented in a format relating to the minimum fuel option procedure.
		AGS Power-Up (required)	Ref para 4.6.2.1.
		AGS alignment valid (required)	Backup AGS Alignment (AGS body axis alignment and PGNCS IMU) (para 4.9.2.2) Backup AGS Alignment (AGS body axis alignment and AOT) (para 4.9.2.3) AGS Lunar Alignment (para 4.9.3.2).
		AGS LM state vector valid (required)	AGS Initialization Routine (R47) (para 4.6.1.18), AGS Manual LM State Vector Update/Initialization, procedure (para 4.6.2.7), or AGS Manual Rendezvous Radar LM State Vector Update procedure (para 4.8.2.2)
		AGS CSM state vector valid (required)	AGS Initialization Routine (R47) (para 4.6.1.18), AGS Manual CSM State Vector Update/Initialization procedure (para 4.6.2.9)
		AGS Wb Vector Update (required if applicable to mission)	Ref para 4.6.2.15.
		AGS Manual Rendezvous Radar LM State Vector Update (required)	Ref para 4.8.2.2.
			Valid AGS LM state vector is not applicable when this procedure is used as part of AGS Manual Rendezvous Radar LM State Vector Update.
	1	1. Establish AGS Attitude Error Display mode: RATE/ERR MON sw - LDG RDR/CMPTR	Ref para 4.5.3.4. If total attitude display is desired, establish AGS Total Attitude Display mode (para 4.5.3.3).
		2. Establish attitude control mode AEA attitude hold submode - Key DEDA C 400+00000E	AEA attitude hold submode configuration is normally established after maneuver in which ABORT or ABORT STAGE pb was used.

CREW-MAN	PNL	PROCEDURES	REMARKS
		4.6.2.13 AGS Orientation to Initial Computed Steering Attitude (cont)	
	1	GUID CONT sw - AGS	
	3	S/C: ROLL, PITCH, & YAW sw - MODE CONT	
		AGS Attitude Hold/Rate Command Mode:	Ref para 4.5.1.6.
	3	S/C: AGS sw - ATT HOLD	
		S/C: DEAD BAND sw - MAX	
		Select guidance steering from following:	
		X-axis guidance steering, Z-axis parallel to CSM orbit plane -	
		Key DEDA C 623+00000E	
		Key DEDA C 400+10000E; or	
		With yaw orientation specified by Wb vector -	Wb vector is provided for S-band LOS angle for ascent from far western lunar landing sites. Checkout and/or other use of Wb vector is possible for earth-orbital flights.
		Key DEDA C 623+10000E	
		Key DEDA C 400+10000E; or	
		Acquisition Z-axis steering -	
		Key DEDA C 507+00000E	
		Key DEDA C 400+20000E; or	
		Thrust guidance Z-axis steering -	
		Key DEDA C 507+10000E	
		Key DEDA C 400+20000E	
		3. Orient LM to computed steering attitude:	
		a. Manual:	Minimum fuel option - preferred method for AGS orientation of LM.
		S/C:	
		ROLL, PITCH, & YAW sw - PULSE or DIRECT	
		DEADBAND sw - MIN	
		S/C: AGS sw - AUTO	
		ACA - null attitude errors	Attitude error needles must be nulled by "flying-to" needles. A "fly-from" null will be a false null and will result in large attitude excursions when vehicle is returned to automatic control. Avoid IMU gimbal lock.
		S/C: ROLL, PITCH, & YAW sw - MODE CONT	
		CAUTION	
		Orientation in auto (minimum time option) with maximum deadband (after staging) can overload AEA counters & lose AEA alignment.	
		b. Automatic:	Minimum time option (ABRUPT 5° and/or 10°/sec maneuver)
		S/C: DEAD BAND sw - MIN	
		S/C: AGS sw - AUTO	

G & C GENERAL

CREW-MAN	PNL	PROCEDURES	REMARKS
		4.6.2.14 AGS Accelerometer Calibration	Purpose of AGS Accelerometer Calibration procedure is to calibrate AGS accelerometers without using PGNCS IMU.
		CAUTION AGS accelerometer calibration requires unaccelerated flight, & rotation rates $\leq 0.1°$/sec.	Time to complete procedure is approximately 302 seconds.
		AGS Power-Up (required)	Ref para 4.6.2.1.
		AGS Checkout (desired)	Ref para 4.6.2.4.
		Communications Basic (desired - near earth)	Ref para 4.13.2.1.
		S-Band Steerable Antenna Activation and Checkout (desired lunar distance)	Ref para 4.2.20.
	1	1. Establish Attitude Rate Display mode: RATE SCALE sw - 5°/SEC	Ref para 4.5.3.5.
		2. Establish desired attitude control mode from following:	
	3 1	a. AGS Pulse: GUID CONT sw - AGS S/C: AGS sw - AUTO or ATT HOLD ROLL, PITCH, & YAW sw - PULSE DEAD BAND sw - MAX or MIN ENG THR CONT: BAL CPL sw - ON	Ref para 4.5.1.7.
	3 1	b. AGS Direct: GUID CONT sw - AGS S/C: AGS sw - AUTO or ATT HOLD ROLL, PITCH, & YAW sw - DIRECT DEAD BAND sw - MAX or MIN ENG THR CONT: BAL CPL sw - ON	Ref para 4.5.1.8.
	1 3	c. PGNCS Attitude Hold/Rate Command GUID CONT sw - PGNS S/C: PGNS sw - ATT HOLD ROLL, PITCH, & YAW sw - MODE CONT Key V77E NO DAP lt - off	Ref para 4.5.1.3. In-flight accelerometer-only calibration is acceptable with RCS not inhibited, but calibration accuracy may be degraded.

LM 3231

CREW-MAN	PNL	PROCEDURES	REMARKS
		4.6.2.14 AGS Accelerometer Calibration (cont)	
		d. During docked flight, request that CSM maintain drifting flight.	
		3. Read out & record accelerometer bias-compensation coefficients: X-Accelerometer Key DEDA C 540R (0.001/0.01 fps sq) Y-Accelerometer Key DEDA C 541R (0.001/0.01 fps sq) Z-Accelerometer Key DEDA C 542R (0.001/0.01 fps sq)	Parenthetical quantization notation: lunar mission/ earth mission.
		4. Command accelerometer calibration: Key DEDA C 400+70000E Note time or start EVNT TMR ind	
		5. 35 seconds after beginning step 4. Resume attitude control: Key DEDA C 400+00000E Establish desired attitude control mode	Although AGS accelerometer calibration requires only approximately 32 seconds to complete, AEA remains in calibrate mode for 302 seconds. Calibration may be manually terminated after 35 seconds by keying DEDA C 400+00000E (attitude hold).
		6. Repeat step 3	Readout of these quantities places them on AGS downlink.
		4.6.2.15 AGS Wb Vector Update	Purpose of AGS Wb Vector Update procedure is to maintain S-band LOS angles for ascent from far western lunar landing sites. Checkout or other use of yaw orientation is possible for earth-orbital flights.
		AGS Power-Up (required)	Ref para 4.6.2.1.
		AGS Checkout (desired)	Ref para 4.6.2.4.
		1. Receive & record Wb vector components from MSFN, & enter Wb vector components: X-component Key DEDA C 514±XXXXXE (octal) Y-component Key DEDA C 515±XXXXXE (octal) Z-component Key DEDA C 516±XXXXXE (octal)	Nominally, appropriate Wb vector is loaded before launch.

G & C GENER

CREW-MAN	PNL	PROCEDURES	REMARKS
		4.6.2.16 <u>AGS Lunar Surface Gyro Calibration</u>	Purpose of AGS Lunar Surface Gyro Calibration procedure is to reestimate gyro-drift-compensation coefficients on lunar surface.
		AGS Power-Up (required)	Ref para 4.6.2.1.
		AEA Self-Test (desired)	Ref para 4.6.2.3.
		AGS Lunar Azimuth Store (required)	Ref para 4.6.2.17.
		AGS alignment (required)	PGNCS/AGS Align procedure (para 4.9.2.1) or AGS Lunar Align (400+40000) (para 4.9.3.2).
		S-Band Steerable Antenna Activation and Checkout (desired)	Ref para 4.2.20. Required to downlink calibration data
		1. Read out & record gyro-drift-compensation coefficients: Key DEDA C 544R (0.01°/hr) C 545R (0.01°/hr) C 546R (0.01°/hr)	Readout of coefficients places them on AGS downlink.
		2. Enter appropriate lunar rotational rate information: Key DEDA C 640±XXXXX (octal) C 641±XXXXX (octal) C 642±XXXXX (octal)	AGS Flight Program 7 (FP-7) includes routines for calibrating gyros without restriction on lunar latitude or spacecraft alignment.
		3. Command gyro calibration: Key DEDA C 400+60000E	
		4. Read out gyro calibration status: C 400R	Readout automatically changes to zero after 302 seconds of calibration, to indicate completion of calibration.
		5. Read out & record gyro-drift-compensation coefficients after completion of calibration: Key DEDA: C 544R (0.01°/hr) C 545R (0.01°/hr) C 546R (0.01°/hr) Compare with previous values	Allowable differences: ±0.90°/hr prelaunch to in-flight ±0.70°/hr in-flight to in-flight (<24 hours)

LM 3248

CREW-MAN	PNL	PROCEDURES	REMARKS
		4.6.2.17 AGS Lunar Azimuth Store	Purpose of AGS Lunar Azimuth Store procedure is to store azimuth angle for possible later use by AGS Lunar Align procedure and to indicate to AGS that LM is on lunar surface. (Lunar surface flag is set by this procedure.)
		AGS Power-Up (required)	Ref para 4.6.2.1.
		AGS Self-Test (desired)	Ref para 4.6.2.3.
		PGNCS/AGS Align	Ref para 4.9.2.1.
		1. Immediately after touchdown, command store lunar azimuth: Key DEDA C 413+10000E	Any entry (+10000 is suggested) causes lunar azimuth to be stored and lunar surface flag to be set.
		4.6.2.18 AGS Rescaling From Lunar to Earth Mission	Purpose of AGS Rescaling From Lunar to Earth Mission procedure is to provide method of modifying scaling in AEA program when mission changes from lunar to earth.
		NOTE Not included in the following list are modified targeting J constants. New values will be determined when a backup mission is established.	
		DEDA Address / Entry / Parameter	DEDA scale factors; to be entered first because they are for use in input-processing other DEDA entries.
		651 / +20000 / B13VSF	
		653 / +32756 / B23RSF	
		656 / +15367 / B22RSF	
		677 / +20305 / B23SF	
		304 / +07839 / 3K4	Sine of TPI central angle limit
		446 / +00034 / 4K25	Eng cutoff compensation
		454 / +00100 / 4K26	ΔVG threshold
		466 / +00015 / 5K26	VG threshold
		473 / -07332 / 4K27	Descent stage bias
		526 / +13560 / 2K11	VF limit
		607 / +12000 / K55	Altitude rate scaling
		634 / +00020 / 1K35	Accelerometer bias threshold
		636 / +62026 / 2K1	Gravity constant
		637 / +50732 / 2K2	1/2K1
		660 / +00100 / 4K34	aT lower limit

G & C GENERAL

CREW-MAN	PNL	PROCEDURES	REMARKS
		4.6.2.18 AGS Rescaling From Lunar to Earth Mission (cont)	
		DEDA Address / Entry / Parameter	
		661 / +00007 / 4K35	Ullage threshold
		674 / -15752 / 2K4	-2(2K1)
		534, 535, 536 / (Accelerometer scale factors) / 1K18, 1K20, 1K22	Accelerometer scale factors; octal number must be replaced by number equal to one-fourth of previous value as follows: 1. Read existing value. 2. Convert octal readout to binary. 3. Round constant by adding 1 to second least significant bit. 4. Drop two least significant bits and add two bits at most significant end of word. Bits added are zeros if readout was plus; ones, if readout was minus. Regroup as five octal digits. 5. Enter into original address with original sign.
		540, 541, 542 / (Accelerometer bias compensation constants) / 1K19, 1K21, 1K23	Accelerometer bias-compensation constants (decimal quantities, scaled at 0.001 fps sq) are rescaled as follows: 1. Readout and record accelerometer bias compensation constants 2. Change BACCSF - Key DEDA C657+23420 3. Round accelerometer bias-compensation constant by adding 0.005 4. Reenter accelerometer bias constant - Key DEDA C 540 (541, 542) +XXXXX (0.01 fps sq)
		657 / (DEDA scale factor) +23420 / BACCSF	
		537 / (X-gyro mass unbalanced compensation constant) / 1K14	Existing octal number must be replaced by number equal to four times its former value. Following is method for obtaining new value: 1. Read existing value. 2. Convert octal readout to binary. 3. Drop two most significant bits and add two zeros at least significant end of word. Regroup as five octal digits. 4. Enter new value into original location with original sign.

CREW-MAN	PNL	PROCEDURES	REMARKS
		4.6.2.19 AGS Power-Up From AGS Partial Power-Down	
CDR	11	1. CB/AC BUS B: AGS - close	AGS warn lt latches on (caused initially by core priming operation which, when performed, interferes with program inhibit of hardware alarm).
LMP	6	AGS STATUS sw - OPERATE	
	1,2	MASTER ALARM - on	
	1/2	MASTER ALARM pb/lt - reset	
	1	AGS warn lt - on	AEA initial state: 1. Engine-off is present. 2. Addresses 400 and 410 through 417 are set to 00000.
	2	O_2/H_2O QTY MON sel - C/W RESET	O_2/H_2O QTY MON sel should not remain in C/W RESET position. It performs its reset function only at time it is switched into C/W RESET position.
	1	AGS warn lt - off	For AGS to operate correctly, 412 output must be 10000.
	2	O_2/H_2O QTY MON sel - previous position	
	6	Key DEDA C 412R +10000	
		2. Perform AEA Readiness Check	Ref Para 4.6.2.12
		4.6.2.20 AGS Partial Power-Down	AGS Partial Power Down procedure may be used for lunar stay to eliminate possibility of bias shift resulting from complete power-down.
		AGS Power-Up (required)	Ref para 4.6.2.1.
LMP	16	1. CB S/C: AEA - open	CB S/C: AEA - open before AGS STATUS sw - STAND BY. This eliminates detrimental effects of switch closure bounce.
	1	AGS warn lt - on	AGS warn lt - on because of improper ASA power outputs due to absence of AEA clock.
	1,2	MASTER ALARM - on	
	1/2	MASTER ALARM pb/lt - reset	
	6	2. AGS STATUS sw - STAND BY	
	16	CB S/C: AEA - close	
		AGS warn lt - off or AGS warn lt - on	
	2	02/H2O QTY MON sel - C/W RESET & return to previous position	Opening CB S/C: AEA in step 1 may cause AEA to issue test-failure signal, which causes AGS warn lt to latch on.
		AGS warn lt - off	
CDR	11	3. CB/AC BUS B: AGS - open	

G & C GENERA

CREW-MAN	PNL	PROCEDURES	REMARKS
		4.6.3 RADAR	
		4.6.3.1 Rendezvous Radar Power-Up	Assumption: Rendezvous Radar Initial Activation & Check-out procedure has been completed. Para 4.6.3.2.
	11	CB HTR: RNDZ RDR OPR - close (required) CB HTR: RNDZ RDR STBY - open (required)	Circuit breaker shall be closed for at least 1 hour 45 minutes prior to operation (time required to warm up high power multiplier (HPM) from cold soak to normal operating temperature (-40°F to +10°F) with LM bus voltage of 29 volts.) Circuit breaker shall be closed for at least 45 minutes prior to self test (time required to warm up HPM from cold soak to minimum operating temperature (-40°F to -5°F) with LM bus voltage of 29 volts). Adequate RR accuracy for an abort from the lunar surface can be assured with the following warmup (28 volts at antenna).

Lunar Surface Antenna Position	Lunar Surface Warmup Time using operate heaters only (-40°F +10°F, HPM)	Lunar Surface Warmup time using operate heaters until HPM reaches -5°F and using concurrent heater /electronics operation to complete warmup (-40°F to +10°F, HPM)
AOT Alignment	45 minutes	32 minutes (activate electronics after 25 minutes, HPM at -5°F)
Boresight LM +X	32 1/2 minutes	26 minutes (activate electronics after 20 minutes, HPM at -5°F)
Boresight at sun	20 minutes	18 minutes (activate electronics after 14 minutes, HPM at -5°F)

CAUTION

HPM may be damaged if operated at temperatures below -5°F

	3	1. Select display mode: HTR CONT: TEMP MON sel - RNDZ RADAR	Ref para 4.5.3.13.

CREW-MAN	PNL	PROCEDURES	REMARKS
		4.6.3.1 Rendezvous Radar Power-Up (cont)	
		2. Verify rendezvous radar temperature: HTR CONT: TEMP ind - ≥ +10°F	Wait until HTR CONT: TEMP ind - ≥ +10°F before continuing procedure.
	11	3. CB/AC BUS A: RNDZ RDR - close Wait 30 sec. CB PGNS: RNDZ RDR - close	Prevents: (1) Probable high-rate driving of antenna into stops and (2) probable unpredictable performance during gyro spin-up.
		RNDZ RADAR: NO TRACK lt - on	This light is normally on when radar is energized but is not tracking.
		4.6.3.2 Rendezvous Radar Initial Activation & Checkout	
		LGC Power-Up (required)	Ref para 4.6.1.1.
		LGC Self-Test (desired)	Ref para 4.6.1.13.
		ATCA Power-Up (required)	Ref para 4.2.4.
	11	CB HTR: RNDZ RDR OPR - close (required) CB HTR: RNDZ RDR STBY - open (required)	Circuit breaker shall be closed for at least 45 minutes prior to self test (time required to warm up HPM from cold soak to minimum operating temperature (-40°F to -5°F) with LM bus voltage of 29 volts).
	1	1. Select displays: SHFT/TRUN ∡ sw - ±50° RATE/ERR MON sw - RNDZ RADAR RNG/ALT MON sw - RNG/RNG RT	Ref para 4.5.3.6.
	12	2. RR GYRO SEL sw - PRIM	To avoid possible gyro logic voting problems, use PRIM position at all times unless primary gyro fails, at which time SEC should be selected. Failure of primary gyro while in mode I is indicated by gyration of FDAI shaft and trunnion needles.

G & C
GENERA

CREW-MAN	PNL	PROCEDURES	REMARKS
		4.6.3.2 Rendezvous Radar Initial Activation & Checkout (cont)	
	3	3. HTR CONT: TEMP MON sel - RNDZ RADAR	Ref para 4.5.3.13.
		HTR CONT: TEMP ind - $\geq$ +10°F	Wait until HTR CONT: TEMP ind - $\geq$ +10° F before continuing procedure.
		4. RNDZ RADAR sel - SLEW	Data-no-good signal to CWEA is inhibited.
		5. Release rendezvous radar antenna restraining device: a. Remove locking PIP pin from T-handle mechanism on left side of AOT guard. b. Pull T-handle down to release antenna & take up cable slack until detent is engaged. c. Reinsert locking PIP pin.	RR antenna must remain stowed or in 0° trunnion angle, 283° shaft angle before undocking, to prevent CSM RCS plume-impingement damage.
	11	6. Apply power to rendezvous radar: CB/AC BUS A: RNDZ RDR - close (after 30 sec.) CB PGNS: RNDZ RDR - close	Prevents: (1) Probable high-rate driving of antenna into stops and (2) probable unpredictable performance during gyro spin-up.
	3 1	7. RNDZ RADAR: NO TRACK lt - on RNG/ALT ind pwr/sig fail lt - on	
	3	8. Bring rendezvous radar antenna to mode I with shaft & trunnion angles at 0°: RNDZ RADAR: SLEW RATE sw - HI Hold RNDZ RADAR: SLEW sw - LEFT (trunnion angle display on FDAI deflects to right & returns to 0°.) RNDZ RADAR SLEW RATE sw - LO Hold RNDZ RADAR: SLEW sw - DOWN (Shaft angle display on FDAI reaches 0°.)	Trunnion slew at low rate can result in large amplitude oscillation near 90°.
		9. If docked with CSM, verify: CSM RCS thruster B-3 - off RNDZ RDR transponder - off	
		10. Select rendezvous radar display: X POINTER SCALE sw - HI	Ref para 4.5.3.7.
		11. RNDZ RADAR: SLEW RATE sw - HI	
		12. Verify: RADAR: NO TRACK lt - on RNG/ALT ind pwr/sig fail lt - on	

CREW-MAN	PNL	PROCEDURES	REMARKS
		4.6.3.2 Rendezvous Radar Initial Activation & Checkout (cont)	
		13. RNDZ RADAR: SLEW RATE sw - LO	
	AOT	14. Confirm nulling can be achieved with: RR GYRO SEL sw - AUTO & SEC.	
		15. RR GYRO SEL sw - PRIM	
	3	16. Hold RNDZ RADAR: SLEW sw - UP or DOWN, as required, until shaft angle display on FDAI reaches 0°.	
		17. RNDZ RADAR sel - AUTO TRACK	
		CAUTION Monitor FDAI & prevent trunnion angle from exceeding 50° meter limit. Performance monitoring above meter limit is not possible. If trunnion is permitted to drift above meter limit, unstable performance may occur.	
		18. RADAR TEST sw - RNDZ	RR antenna will cycle and drift during self-test. Track lockup takes approximately 12 seconds.
		RADAR: TEST/MON sel - positions indicated in chart, & observe values given for each radar.	Values given are extremes of tolerance for each function.

Rendezvous Radar					
Electronics Assembly*	Antenna Assembly	AGC	Xmtr Pwr	Shaft Err	Trun Err
27	34	1.3 to 1.7	2.3 to 2.7	2.2 to 2.6	2.2 to 2.6
34	40	1.5 to 1.9	2.8 to 3.2	2.2 to 2.6	2.2 to 2.6
36	42	1.2 to 1.6	2.8 to 3.2	2.2 to 2.6	2.2 to 2.6
40	23	1.4 to 1.8	2.8 to 3.2	2.2 to 2.6	2.2 to 2.6
42	44	1.4 to 1.8	2.5 to 2.9	2.2 to 2.6	2.2 to 2.6

*Assignment of rendezvous radar electronics assemblies to vehicles as of 8/31/71 is:
LM11 - RREA 36; LM12 - RREA 40; spares - RREA 34, 42; hold - RREA 27

LM 3214, LM 3231

CREW-MAN	PNL	PROCEDURES	REMARKS
		4.6.3.2 Rendezvous Radar Initial Activation & Checkout (cont)	
		RADAR: NO TRACK lt - off	
	1	RNG/ALT ind pwr/sig fail lt - off	
		19. To set No RR Monitor flag: Key V25 N07E - Load flagword generator R1 101E - ECADR of No RR Monitor flag R2 10E - Bit identification, bit 4 R3 1E - Set bit (to reset load 0)	Enables display of RR data on DSKY in all RR antenna positions.
	3	20. RNDZ RADAR sel - LGC	
		21. Perform RR/LR Self-Test (R04), steps 22 through 25.	
		22. Key V63E Poss OPR ERR lt - on Exit R04, key RSET	Because LM RR self-test cannot be performed with CSM RR transponder radiating, it is assumed that CSM has disabled its transponder. OPR ERR lt - on if another extended verb from R76 is active or if another program or routine is using either radar, or TRACKFLG is set.
		23. FL V04 N12 R1 Option code for assumed test 00004 R2 LGC assumed option (RR) 00001 R3 ----- Key PRO	
		24. FL V16 N72 - RR CDU angles R1 Trunnion XXX.XX° R2 Shaft XXX.XX° R3 ----- Verify trunnion & shaft angles with FDAI Key PRO	RR CDU angles will change at 0.5 hertz due to RR antenna cycling and drift during self-test.
		25. FL V16 N78 R1 XXX.XX nm Range R2 XXX.X fps Range rate R3 XXBXX min-sec TFI Verify: R1 - XXX.XX +/-0.2 nm R2 - -0XXX.X +1-20 fps Key V34E - Terminate Exit R04	Values are flight values. All pad values will be decrement of these. Tolerance shall be ±0.20 nm of range at ambient temperature and ±20.0 fps of range rate at ambient temperature. Initial abnormal values loaded in rendezvous radar range output shift register during rendezvous radar power-up (-9899.5 fps typical) may be ignored.

LM 3249

CREW-MAN	PNL	PROCEDURES	REMARKS

4.6.3.2 Rendezvous Radar Initial Activation & Checkout (cont)

Rendezvous Radar Electronics Assembly*	Rendezvous Radar Antenna Assembly	R DSKY (nm)	R ind (nm)	R dot DSKY (fps)	R dot ind (fps)
27	34	195.40+/-0.2	196+/-2	-489.0+/-20	-487+/-20
34	40	195.30+/-0.2	195+/-2	-490.5+/-20	-488+/-20
36	42	194.88+/-0.2	195+/-2	-499.5+/-20	-497+/-20
40	23	195.64+/-0.2	196+/-2	-502.5+/-20	-500+/-20
42	44	195.6 +/-0.2	196+/-2	-498.0+/-20	-496+/-20

*Assignment of rendezvous radar electronics assemblies to vehicles as of 8/31/71 is: LM10 - RREA 38; LM11 - RREA 36; LM12 - RREA 40; Spares - RREA 34, 42; hold - RREA 27.

26. RADAR: TEST/MON sel - SHAFT ERR

27. RADAR: SIGNAL STRENGTH ind - verify needle deflection at 0.5 hertz from 2.2 to 2.6 VDC (nominal)

28. RADAR: TEST/MON sel - TRUN ERR

29. Repeat step 27.

30. RNDZ RADAR sel - SLEW
RNDZ RADAR: NO TRACK lt - on
RNG/ALT ind pwr/sig fail lt - on

31. RNDZ RADAR: SLEW sw - null shaft & trunnion angles

32. RNDZ RADAR sel - AUTO TRACK

33. RNDZ RADAR: NO TRACK lt - off
RNG/ALT ind pwr/sig fail lt - off

34. Allow approx 15 sec for lock-on. Verify rendezvous radar lock-on.

G & C GENERAL

LM 3214

CREW-MAN	PNL	PROCEDURES	REMARKS
		4.6.3.2 Rendezvous Radar Initial Activation & Checkout (cont)	
	1	35. Verify reversals every two seconds, of the following: FDAI shaft and trunnion 2° to 8° in amplitude, until beyond display range due to drift. X pointer ind AZ RT & ELEV RT - full scale (both polarities)	Needle motion will be barely perceptible at ± 50°.
		CAUTION Monitor FDAI & prevent trunnion angle from exceeding 50° meter limit (by going to next step). Performance monitoring above meter limit is not possible. If trunnion is permitted to drift above meter limit, unstable performance may occur.	
	3 1,2 2 1/2	36. RADAR TEST sw - OFF MASTER ALARM - on RNDZ RDR caut lt - on MASTER ALARM pb/lt - reset	If docked to CSM, position antenna to 0° -0°, RNDZ RADAR: SLEW RATE sw - HI, slew shaft downward for 15 seconds (to mechanical stop), CB PGNS: RNDZ RDR - open, then CB/AC BUS A: RNDZ RDR - open.

CREW-MAN	PNL	PROCEDURES	REMARKS
		4.6.3.3 Rendezvous Radar Coarse Align	Purpose of Rendezvous Radar Coarse Align procedure is to drive rendezvous radar shaft and trunnion to angles specified by crew. Procedure can be performed only when no other extended verb is active, or when P20 is not in process. Continuous designate mode inhibits RR Gimbal Monitor Routine (25).
		LGC Power-Up (required)	Ref para 4.6.1.1.
		LGC Self-Test (desired)	Ref para 4.6.1.13.
		Rendezvous Radar Power-Up or Initial Activation and Checkout (required)	Ref para 4.6.3.1 and para 4.6.3.2.
	3	1. RNDZ RADAR sel - LGC Key V41 N72E Poss OPR ERR lt - on Exit V41 N72, key RSET	If remoding or repositioning, delay until complete before proceeding to step 2. OPR ERR lt - on if another extended verb is active, P20/P22 in use, or designate or read sequence in process, or TRACKFLG is set.
		2. FL V21 N73 - Load New RR angles	All registers initially blank. For AOT, docking, and lunar-stay operations, stow RR antenna as follows: Shaft: AOT -77° (+283); Docking -50° (+310); Sub-Solar Point Lunar Stay 90° Trunnion: AOT 0°; Docking 0°; Sub-Solar Point Lunar Stay 180° Stow position for impingement or for lunar stay with nominal sun conditions is same as AOT position.
		R1 Trunnion XXX.XX° R2 Shaft XXX.XX° R3 ----- Accept: Load desired angles Reject: Key V34E	Trunnion angle must be less than ±50° to prevent excessive heating due to servo-loop oscillation. The antenna is stowed to provide minimum optical obstruction, maximum clearance, and acceptable RR temperature limits (>-50° and < +150°F).
		3. FL V04 N12 - Option R1 00006 - Assumed RR designate mode R2 00002 - LGC assumed option (continuous designate) R3 ----- R2 1 - Lock-on 2 - Continuous designate Accept: Key PRO Reject: Key V22E - Key 1E (lock-on)	Limits for continuous designate are extended additional 15° in shaft (mode I) beyond normal (-85° to -70° or +275° to +290°). Continuous designate mode must be terminated by DSKY entry V44E. If rendezvous radar antenna position remode or reposition is in process, it will be completed before continuous designate is terminated.

CREW-MAN	PNL	PROCEDURES	REMARKS
		4.6.3.3 Rendezvous Radar Coarse Align (cont)	
		4. V41 - Coarse-align CDU's To monitor RR trunnion & shaft angles during coarse align: Key V16 N72E R1 Trunnion XXX.XX° R2 Shaft XXX.XX° R3 ----- When finished with display: Key KEY REL	
		5. Poss PROG lt - on Key V05 N09E - Call alarm 00502 - Bad angle inputs 00503 - No data-good discrete in 30-sec designate Key KEY REL & RSET	
		4.6.3.4 Rendezvous Radar Manual Designation to Mode II	
		Rendezvous Radar Power-Up (required)	Ref para 4.6.3.1.
		Rendezvous Radar Initial Activation & Checkout (required)	Ref para 4.6.3.2.
		Rendezvous Radar Coarse Align (required)	Ref para 4.6.3.3.
	1	1. RATE/ERR MON sw - RNDZ/RADAR	
	3	2. RNDZ RADAR: SLEW RATE sw - HI SLEW sw - RIGHT until trunnion angle jumps to zero from extreme right of scale	

LM 3231

CREW-MAN	PNL	PROCEDURES	REMARKS
		4.6.3.5 Rendezvous Radar Manual Side-Lobe Acquisition Check & Main-Lobe Acquisition Verification	
		COAS Lighting Check	Ref para 4.2.9.
		Rendezvous Radar Power-Up (required)	Ref para 4.6.3.1.
		or Rendezvous Radar Initial Activation & Checkout (required)	Ref para 4.6.3.2.
		CSM maintaining preferred tracking attitude	
		Communications Basic (required - near earth)	Ref para 4.13.2.1.
		S-Band Steerable Antenna Activation and Checkout (required - lunar distance)	Ref para 4.2.20.
			This procedure is normally entered from LM Rendezvous Navigation Program (P20) (para 4.8.2.1) or AGS Manual Rendezvous Radar LM State Vector Update procedure; therefore, requirements and switch settings for these procedures are not repeated in this procedure.
			Figure 4-12 data are taken from rendezvous radar P-23, figures 4-17 through 4-21 are from test data compiled on RR electronic assembly No. 9 and antenna assembly No. 7, and per transponder simulator LSW410-3070. Transponder simulator doubles true single-path attenuation and exaggerates AGC differences between side-and main-lobe peaks.
		1. Select RR display:	
	1	SHFT/TRUN ⅟ sw - ±50°	
		RATE/ERR MON sw - RNDZ RADAR	Ref para 4.5.3.6.
		RNG/ALT MON sw - RNG/RNG RT	
	3	RADAR: TEST/MON sel - AGC	Ref para 4.5.3.10.
		2. If CSM is not visible, go to step 4.	
		Turn on COAS:	
		Remove COAS from overhead position.	
		Set COAS detent for forward (left window) position.	
		Install COAS in forward position.	
	8	COAS sw - FWD	
		ACA - maneuver LM to bring CSM to center of COAS reticle	
		COAS sw - OFF	

CREW-MAN	PNL	PROCEDURES	REMARKS
		4.6.3.5 Rendezvous Radar Manual Side-Lobe Acquisition Check & Main-Lobe Acquisition Verification (cont)	
		3. If shaft & trunnion angles are not nulled and RNDZ RADAR: NO TRACK lt - on:	Approximately 15 seconds are required for lockup.
	3	RNDZ RADAR sel - SLEW	
		RNDZ RADAR: SLEW sw - slew to null shaft & trunnion angles	
		RNDZ RADAR sel - LGC or AUTO TRACK	Selection is based on procedure referencing this procedure.
		RNDZ RADAR: NO TRACK lt - off (after approx 15 sec)	
		4. If RNDZ RADAR: NO TRACK lt - on, go to step 6	
	1	RANGE ind - note range	At low AGC levels (approximately 0.5 vdc), RANGE ind will display unstable sequence of range values. In this case, acquisition is likely to have been made on side lobe.
	3	RADAR: SIGNAL STRENGTH ind - note AGC level (See figure 4-17 for main lobe).	Figure 4-17 is a nomogram illustrating nominal AGC level versus range. Adjustment for RR transponder gain (if CSM attitude is off-nominal) or RR transponder transmitter output power degradation can be made using signal strength in dbm. RR electronic assembly and RR transponder temperatures as they affect RR AGC are not compensated for in the nomograph. However, Apollo 9 AGC tracked "ambient" curve closely; therefore, RR P-18 ambient curve was selected for this nomogram. AGC values 12 to 18 db down from nominal indicate probable side-lobe acquisition. Variations in AGC values are due to several variables: CSM orientation produces ±6-db variation, CSM transponder output produces variations, and RR temperature also produces variations. Therefore, signal strength versus range may not always discriminate between main- and side-lobe lockup.

CREW-MAN	PNL	PROCEDURES	REMARKS
		4.6.3.5 Rendezvous Radar Manual Side-Lobe Acquisition Check & Main-Lobe Acquisition Verification (cont)	
	1	RANGE ind - verify AGC is nominal for display range	
		If AGC is not nominal: a. Verify transponder signal strength receiver on LM AGC indicator. Determine LOS angles from LM to CSM using voice and/or COAS. b. Determine AGC variation as a function of CSM transponder altitude with respect to LOS to LM. c. Determine if AGC maximum value reflects side lobe or main lobe acquisition.	
		5. Acquire main lobe from side lobe: If shaft & trunnion angles on FDAI are not at null:	Figure 4-19 shows projected view of shaft and trunnion angles vs. AGC angles for RR main and side lobes.
	3	S/C: PGNS sw (or AGS sw) - ATT HOLD ACA - maneuver to null shaft & trunnion angles RNDZ RADAR sel - SLEW RNDZ RADAR: SLEW sw - slew (in shaft or trunnion) to find symmetric stable lock-on peak	
		Determine middle point between twin peaks.	Lowest dip between twin peaks (middle point) is based on approximately 4-second slewing from peak to peak or on splitting difference between shaft (or trunnion) angles at two peaks.
		RNDZ RADAR: SLEW sw - slew in other axis to find higher AGC peak.	
		RNDZ RADAR sel - LGC or AUTO TRACK	Selection is based on procedure referencing this procedure.
		RNDZ RADAR: NO TRACK lt - off (after approx 15 sec)	Approximately 15 seconds are required for lockup.
		6. To obtain initial lock-on: RNDZ RADAR sel - SLEW RNDZ RADAR: SLEW sw - slew to null shaft & trunnion angles	Note any AGC peaks in event AGC is zero at shaft and trunnion null.
		7. When AGC response is observed: RNDZ RADAR: SLEW sw - search for highest peak or pair of peaks; note shaft & trunnion angles RNDZ RADAR sel - LGC or AUTO TRACK	Selection is based on procedure referencing this procedure.

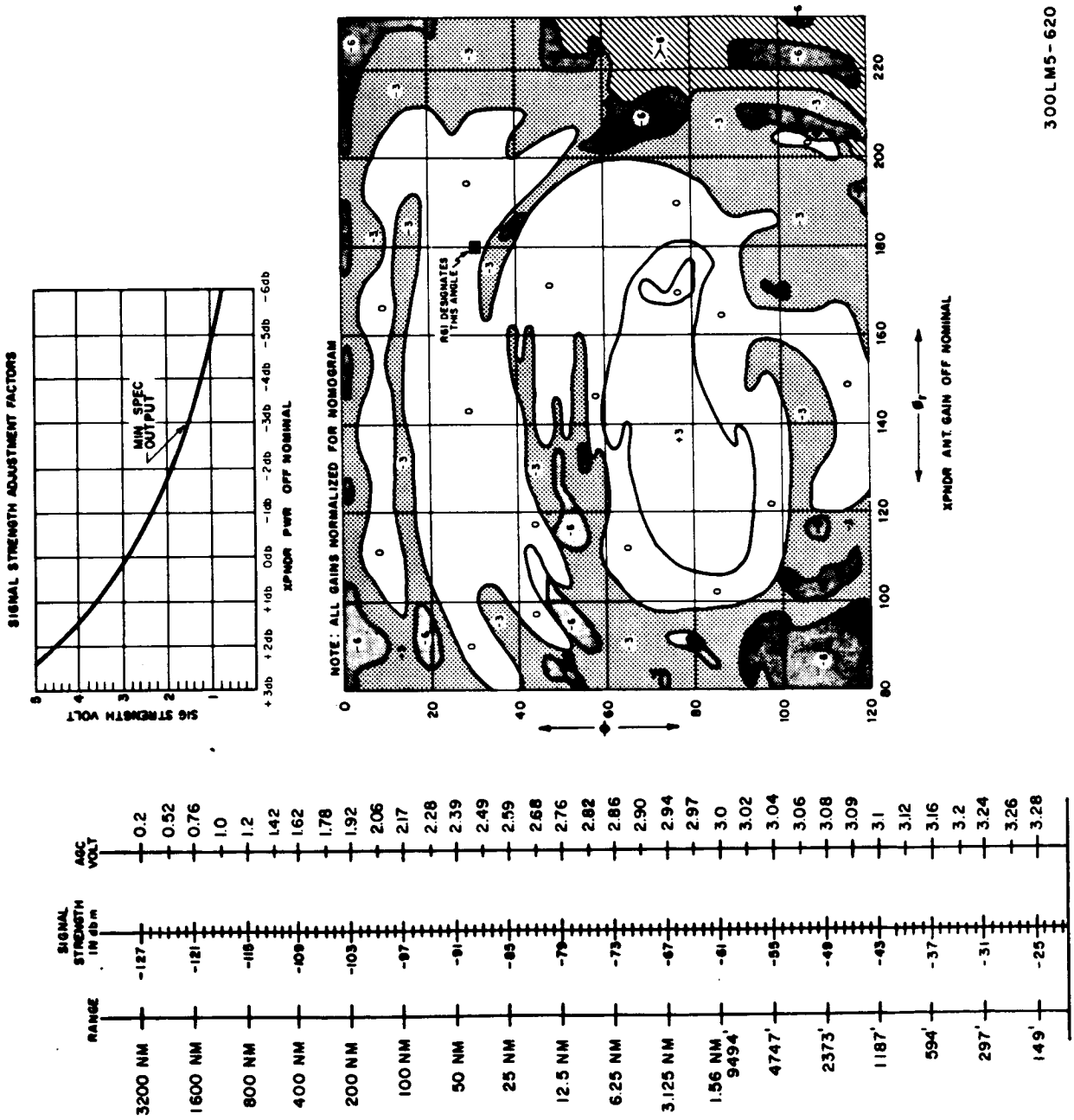

300LM5-620

Figure 4-17. Nomogram for Interpretation of Rendezvous Radar AGC (Normalized to -109 dbm 400 nm)

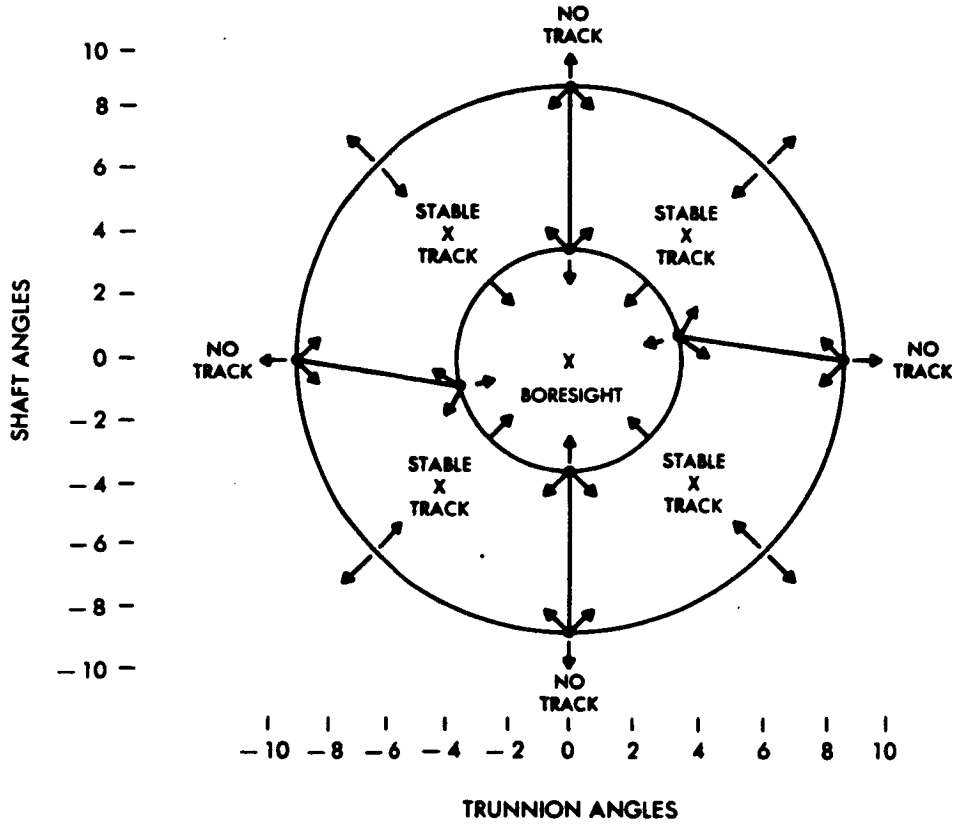

Figure 4-18. Test Data, Designation Loci To Stable Tracking Angles

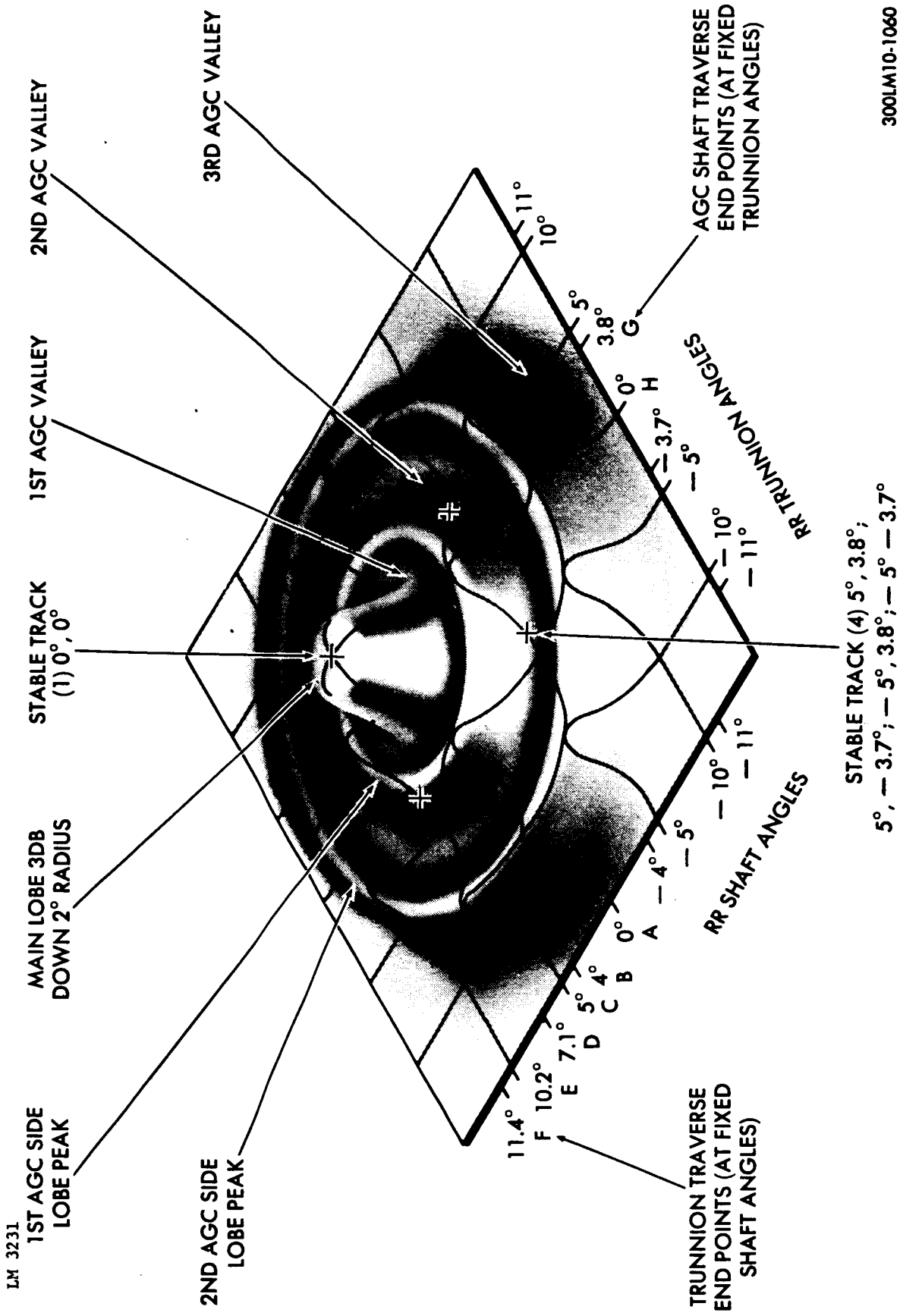

Figure 4-19. Test Data, AGC Signal Surface at Close Range (< 4 nm)

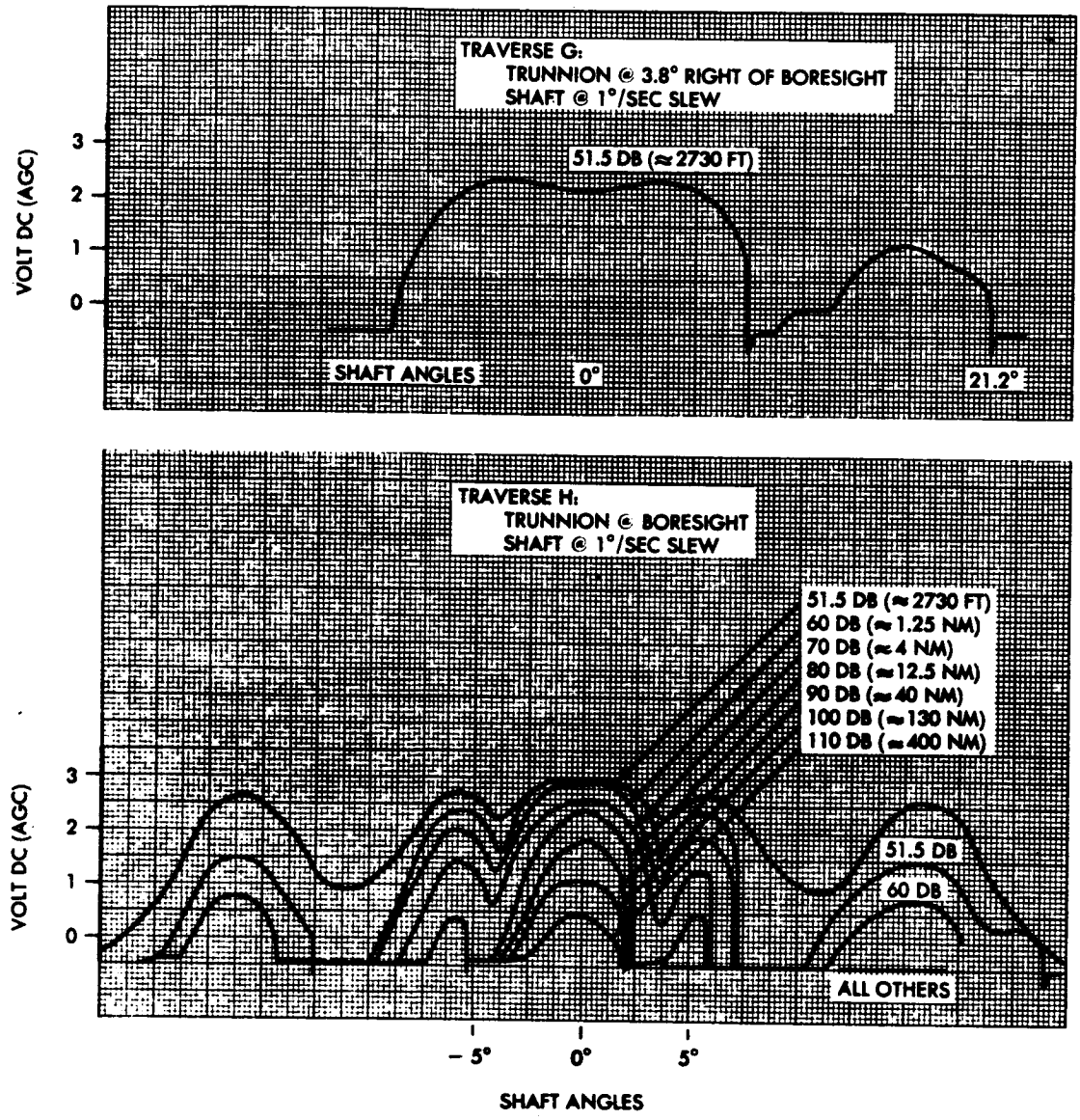

A-300LM5-605

Figure 4-20. Test Data, Rendezvous Radar Shaft Traverses at Fixed Trunnion Values

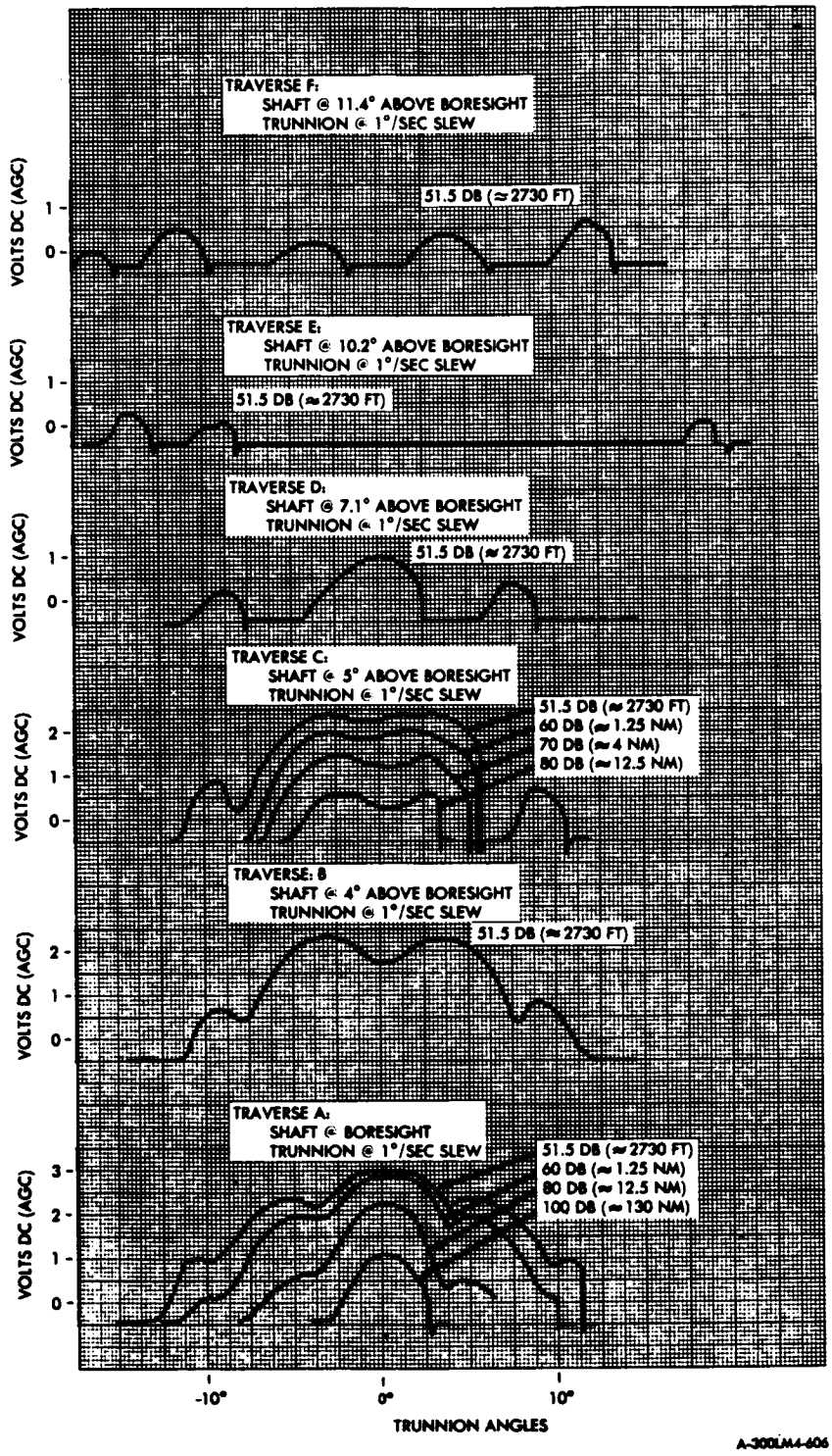

Figure 4-21. Test Data, Rendezvous Radar Trunnion Traverses at Fixed Shaft Values

LM 3231

CREW-MAN	PNL	PROCEDURES	REMARKS
		4.6.3.5 Rendezvous Radar Manual Side Lobe Acquisition Check & Main-Lobe Acquisition Verification (cont)	
		RNDZ RADAR: NO TRACK lt - off (after 15 sec)	Approximately 15 seconds are required for lockup.
		If RNDZ RADAR: NO TRACK lt - on, return to step 4	No lock-on implies AGC peaks were from second side lobe (second side-lobe lock-on is not possible at >0.5 nm range) or from first side lobe at range too great for lock-on. (See figure 4-17.)
	3	RNDZ RADAR sel - SLEW RNDZ RADAR: SLEW sw - slew to previous shaft & trunnion angles; search for higher AGC peak in other axis, starting from highest peak previously found or from bisection of pair of highest peaks previously found	
		Return to beginning of step 7.	
		4.6.3.6 Terminate Rendezvous Radar Continuous Designate	Purpose of Terminate Rendezvous Radar Continuous Designate procedure is to clear continuous designate and designate (internal) flags, disable RR CDU error counters, and enable RR Monitor Routine (R25). Procedure may be selected at any time, but has no effect unless Rendezvous Radar Coarse Align (option 2) is in process. If remode or reposition is in process, termination will be delayed until remode or repositioning is completed.
		LGC Power-up (required)	Ref para 4.6.1.1.
		1. Key V44E	
		4.6.3.7 Landing Radar Power-Up	
	3	1. Select displays mode & verify landing radar temperature: HTR CONT: TEMP MON sel - LDG RADAR Monitor HTR CONT: TEMP ind	Temperature limits are determined by management curves and are mission dependent.
	11	2. CB PGNS: LDG RDR - close	
	3	3. Monitor velocity transmitter power: RADAR: TEST MON sel - VEL XMTR SIGNAL STRENGTH ind - >2.1 vdc	Signal strength noted in OCP testing: approximately 3.0 vdc. (Transmitter power is temperature-dependent.)
		4. Monitor altimeter transmitter power: RADAR: TEST MON sel - ALT XMTR SIGNAL STRENGTH ind - >2.1 vdc	Signal strength noted in OCP testing: approximately 3.0 vdc. (Transmitter power is temperature-dependent.)

CREW-MAN	PNL	PROCEDURES	REMARKS
		4.6.3.8 Landing Radar Checkout	
		LGC Power-Up (required)	Ref para 4.6.1.1.
		LGC Self-Test (desired)	Ref para 4.6.1.13.
		Landing Radar Power-Up (required)	Ref para 4.6.3.7.
		1. Select landing radar display:	
	1	RATE/ERR MON sw - LDG RDR/CMPTR	
		MODE SEL sw - LDG RADAR	
		RNG/ALT MON sw - ALT/ALT RT	
		X POINTER SCALE sw - HI MULT	
		2. Select self-test mode:	
	3	RADAR TEST sw - LDG	
		3. Verify self-test signal values:	Record self-test signal for mission evaluation (to nearest 50 feet).
	1	ALT ind - 7700 to 8100 ft	Nominal altitude display is 8000 ft.
	3	ALT RATE ind - 478 to - 482 fps	Nominal altitude rate is -480 fps.
	1	X pointer ind - off scale, to right and up	
		4. Perform LR/RR Self-Test (R04):	
		Key V63E	
		Poss OPR ERR lt - on	OPR ERR lt - on if another extended verb from R76 is active or if another program or routine is using either radar, or TRACKFLG is set.
		Exit R04, key RSET	
		5. FL V04 N12	
		R1 00004 - Option code for assumed test	
		R2 00001 - LGC assumed option (RR)	
		R3 -----	
		Key Reject: V22E, 2E (load LR option), PRO	LGC supplies LR parameters to MSFN via downlink.
		6. FL V16 N66	Self-test simulated slant range to lunar surface.
		R1 Range XXXXX ft	
		R2 LR position 0000X	
		R3 -----	
		R2 0000X - 1 - LR position 1	
		0000X - 2 - LR position 2	
		Verify R1 is 08276 to 08296 ft ± 2 counts on LGC (approximately 11 ft)	Record for mission evaluation, nominal range: 08286 ft.
		If antenna position change check is not desired: Key PRO, go to step 12.	

CREW-MAN	PNL	PROCEDURES	REMARKS
		4.6.3.8 Landing Radar Checkout (cont)	
	3	7. RADAR: LDG ANT sw - AUTO R2 - 00001	
		8. RADAR: LDG ANT sw - DES R2 - 00001	
		9. RADAR: LDG ANT sw - HOVER R2 - 00002 PROG lt - on Key V05 N09E - Call alarm 00522 - LR position change Key KEY REL & RSET	LR position change during LR read cycle.
		10. RADAR: LDG ANT sw - DES R2 - 00001	
		11. RADAR: LDG ANT sw - AUTO R2 - 00001 Key PRO	
		12. FL V16 N67 - Simulated velocities R1 X XXXXX fps R2 Y XXXXX fps R3 Z XXXXX fps Verify R1 is -00493 to -00497 Verify R2 is +01860 to +01864 Verify R3 is +01329 to +01333	
	3	13. RADAR TEST sw - OFF ALT lt - on VEL lt - on RSET pb - push ALT lt - off VEL lt - off	ALT and VEL lts - on since data-good is lost when RADAR TEST sw - OFF in R04.
		14. To terminate R04: Key V34E	

CREW-MAN	PNL	PROCEDURES	REMARKS
		4.6.3.9 Command Landing Radar to Position 2	Purpose of this extended verb is to drive LR antenna to position No. 2 (final approach and landing) and to cause HIGATJOB (high rate) to occur within 2 seconds if LR is stuck in position number 2 during P63 powered flight.
		LGC Power-Up (required)	Ref para 4.6.1.1.
		Landing Radar Power-Up (required)	Ref para 4.6.3.7.
		1. Key V59E Poss OPR ERR lt - on Exit V59, Key RSET Poss PROG lt - on Key V05 N09E - Call alarm 00523 - LR did not achieve position 2 Key KEY REL & RSET	OPR ERR lt - on if average g is off and TRACKFLG is set another program or routine is using either radar, or if average g is on and P63, P64, or P66 is not in progress. Alarm occurs only with average g off.
		4.6.3.10 Landing Radar Spurious Test Routine (R77)	The purpose of Landing Radar Spurious Test Routine (R77) is to provide landing radar range and velocity data for input on LGC downlink at one/second rate (when desired). Landing radar data are placed on downlink regardless of status of landing radar range-data-good and Velocity-data-good discretes. Some portion of test (minimal) must be performed while MSFN is receiving LGC downlink telemetry data.
		LGC Power-Up (required)	Ref para 4.6.1.1.
		LGC Self-Test (desired)	Ref para 4.6.1.13.
		Landing Radar Power-Up (required)	Ref para 4.6.3.7.
		Landing Radar Checkout (desired)	Ref para 4.6.3.8.
		Communications Basic (required - near earth)	Ref para 4.13.2.1.
		S-Band Steerable Antenna Activation and Checkout (required - lunar distance)	Ref para 4.2.20.

LM 3231

CREW-MAN	PNL	PROCEDURES	REMARKS
		4.6.3.10 Landing Radar Spurious Test Routine (R77) (Cont)	
		1. Key V78E Poss OPR ERR lt - on Exit R77, key RSET	Routine may be called only when no other program or routine is using either radar, or TRACKFLG is set.
		2. To terminate routine: Key V79E	
		4.6.3.11 Landing Radar Power-Down	
		1. CB PGNS: LDG RDR - open	

PARA	TITLE	PAGE
4.7	Prethrust	4.7-2
4.7.1	PGNCS/AGS	4.7-2
4.7.1.1	External ΔV (LGC P30, AEA 410+50000)	4.7-2
4.7.1.2	Coelliptic Sequence Initiation (LGC P32, AEA (410+10000)	4.7-7
4.7.1.3	Constant Δ Altitude (LGC P33, AEA 410+20000)	4.7-14
4.7.1.4	Transfer Phase Initiation (LGC P34, AEA 410+30000, Search; & 410+40000, Execute)	4.7-20
4.7.1.5	Transfer Phase Midcourse (LGC P35, AEA 410+40000)	4.7-28
4.7.2	PGNCS	4.7-32
4.7.2.1	Rendezvous Out-Of-Plane Display Routine (R36)	4.7-32
4.7.2.2	Target ΔV Program (CSM) (P76)	4.7-33
4.7.2.3	Target ΔV Program (LM) (P77)	4.7-34
4.7.3	AGS	4.7-34A
4.7.3.1	AGS Out-Of-Plane Maneuver	4.7-34A
4.7.3.2	AGS Orbit Insertion	4.7-36
4.7.4	CSM Backup	4.7-38
4.7.4.1	CSM Coelliptic Sequence Initiation Targeting Program (P72)	4.7-38
4.7.4.2	CSM Constant Δ Altitude Targeting Program (P73)	4.7-41
4.7.4.3	CSM Transfer Phase Initiation Targeting Program (P74)	4.7-43
4.7.4.4	CSM Transfer Phase Midcourse Targeting Program (P75)	4.7-46

CREW-MAN	PNL	PROCEDURES		REMARKS
		4.7 PRETHRUST		
		4.7.1 PGNCS/AGS		
		Prethrust PGNCS/AGS procedures are in a two-column format to facilitate presenting these procedures as separate PGNCS or AGS procedures, and as integrated PGNCS and AGS procedures: LGC in control and AEA in a followup condition ready to assume control. The left column presents the PGNCS procedures; the right column, AGS procedures.		
		4.7.1.1 External ΔV (LGC P30, AEA 410+50000)		Purpose of PGNCS External ΔV (P30) procedure is to accept targeting parameters from source(s) external to LGC and, from these data, compute velocity and other initial conditions required by LGC for desired maneuver. PGNCS-required parameters are TIG and ΔV vector. AGS External ΔV (410+50000) procedure accepts targeting parameters externally or from CSI, CDH, or TPI guidance routines. This procedure is used for all AGS-controlled thrusts, except AGS Orbit Insertion. Rendezvous Out-of-Plane Display Routine (R36) (para 4.7.2.1) may be used with External ΔV and RCS Thrust Program (P41) With AGS Followup/In Control procedure (para 4.10.1.3) for plane-change initiation (PCI) maneuver. This is accomplished by obtaining ΔVY targeting of external ΔV, followed by plus or minus Y-axis translation PCI maneuver using RCS. PCI is targeted to occur at approximately 30 minutes, or 90° phase angle, before CDH. It forces node at CDH and allows out-of-plane component of ΔV at CDH to achieve coplanar orbits.
		LGC Power-Up (required)		Ref para 4.6.1.1.
		LGC Self-Test (desired)		Ref para 4.6.1.13.

CREW-MAN	PNL	PROCEDURES		REMARKS
		4.7.1.1 External ΔV (LGC P30, AEA 410+50000) (cont)		
		LGC time valid (required)		LGC/CMC Clock Synchronization Routine (R33) (para 4.6.1.15)
		LGC state vector valid (required)		LGC Update Program (P27) (para 4.6.1.7)
		External ΔV data received (required)		LGC Update Program (P27) (para 4.6.1.7)
		IMU Power-Up (LGC Operating) (desired)		Ref para 4.6.1.3. ISS should be on 15 minutes before thrusting maneuver.
		IMU Orientation Determination Program (P51) (desired)		Ref para 4.9.1.1.
			AGS Power-Up (required)	Ref para 4.6.2.1.
			AEA Self-Test (desired)	Ref para 4.6.2.3.
			AGS time valid (required)	AGS Manual Absolute Time Initialization procedure (para 4.6.2.6) or AGS Initialization Routine (R47) (para 4.6.1.18)
			AGS LM/CSM state vector valid (required)	AGS Initialization Routine (R47) (para 4.6.1.18) or AGS Manual LM State Vector Update/Initialization procedure (para 4.6.2.7) and AGS Manual CSM State Vector Update/Initialization (para 4.6.2.9)
				If GUID CONT sw - AGS, select AEA attitude hold: Key DEDA C 400+00000E, or S/C: AGS sw - ATT HOLD. Prevents possible attitude maneuver change of 5° and/or 10°/sec if AEA attitude hold not selected when in AGS control.
			AGS Wb vector valid (desired)	AGS Wb Vector Update (para 4.6.2.15). Valid Wb vector is required if

PRETHR

LM 3231

CREW-MAN	PNL	PROCEDURES		REMARKS
		4.7.1.1 External ΔV (LGC P30, AEA 410+50000) (cont)		
				steering selector address 623 = +10000.
			AGS Alignment valid (desired)	PGNCS/AGS Align (para 4.9.2.1), Backup AGS Alignment (Using AGS Body-Axis Alignment and PGNS IMU) (para 4.9.2.2), or Backup AGS Alignment (Using AGS Body-Axis Alignment and AOT) (Para 4.9.2.3)
			1. If targeting parameters are not computed by CSI, CDH, or TPI guidance routines, receive & record targeting parameters from MSFN.	
		1. Key V37E 30E		Initiate P30 at least 15 minutes before TIG.
			2. Select external ΔV routine: Key DEDA C 410+50000E	External ΔV routine must be selected before entering targeting parameters because Orbit Insertion, CSI, CDH, and TPI routines use some AEA memory locations that contain external ΔV and tig targeting parameters
		2. FL V06 N33 - TIG R1 00XXX hr R2 000XX min R3 0XX.XX sec Accept: Record TIG Key PRO Reject: Key V25E - Load desired TIG		External ΔV components are given in local vertical coordinate frame at time of ignition (tigD). At TIG time bias (external ΔV) (7K1) (nominally 30 seconds) before targeted ignition time, no change in ΔV targeting parameters may be entered. In addition, thrust should not be initiated before 7K1 seconds before targeted ignition time.
		3. FL V06 N81 - ΔV (LV) R1 X XXXX.X fps R2 Y XXXX.X fps R3 Z XXXX.X fps Accept: Key PRO Reject: Key V25E - Load desired ΔV data		Stored components of impulsive ΔV along LM local vertical axes at TIG.

CREW-MAN	PNL	PROCEDURES		REMARKS
		4.7.1.1 External ΔV (LGC P30, AEA 410+50000) (cont)		
				Parenthetical quantization notation: lunar mission/earth mission.
			3. If targeting parameters are received from MSFN (step 1), enter components of external ΔV and tigD: Horizontal component ΔVx - Key DEDA C 450+XXXXXE (0.1/1 fps)	Positive value of ΔVx indicates component of velocity-to-be-gained in posigrade direction.
			Out-of-CSM plane component ΔVy - Key DEDA C 451+XXXXXE (0.1/1 fps)	Positive value of ΔVy indicates component of velocity-to-be-gained opposite to CSM angular momentum vector.
			Radial component ΔVz - Key DEDA C 452±XXXXXE (0.1/1 fps)	Positive value of ΔVz indicates component of velocity-to-be-gained toward gravitational source.
			tigD - Key DEDA C 373+XXXX.XE (0.1 min)	
		4. FL V06 N42 - Calculated thrusting parameters R1 Ha XXXX.X nm R2 Hp XXXX.X nm R3 ΔV XXXX.X fps Coordinate data with MSFN, if available. Accept: Key PRO Reject alternatives: a. Key V34E - reselect P30 & adjust aim parameters. b. Key V34E - select P27 & load new aim parameters via uplink.		Apofocus and perifocus altitudes are measured above launch pad radius in earth orbit; above lunar radius at most recently defined landing site, in lunar orbit. ΔV is magnitude of velocity to be gained at TIG. Maximum altitude display value is 9999.9 nm.
		5. FL V16 N45 - Maneuver data R1 M XXXXX R2 TFI XXBXX min-sec R3 MGA XXX.XX°		M will be 00000 because RR tracking data are normally not taken during P30. TFI is minus before TIG and plus after. Maximum TFI reading is 59:59. MGA at TIG if LM +X-axis is aligned to initial thrust direction, using current IMU alignment; -00002 if IMU orientation is unknown.

PRETHRU

CREW-MAN	PNL	PROCEDURES		REMARKS
		4.7.1.1 External ΔV (LGC P30, AEA 410+50000) (cont)		
				If MGA is not satisfactory, P52 may be selected by keying V37E 52E.
		6. Begin countdown to TIG: Set EVNT TMR ind to count-down Load TIG into EVNT TMR ind a. Use TFI from step 5 or b. Use MSFN time Key PRO		Ref para 4.13.6.
			4. Begin countdown to TIG: Set EVNT TMR ind to count-down. Load time-to-go to ignition into EVNT TMR ind: a. Key DEDA C310R TΔ or b. Use MSFN time.	Ref para 4.13.6.
		7. FL V37 N-- Key XXE		

CREW-MAN	PNL	PROCEDURES		REMARKS
		4.7.1.2 Coelliptic Sequence Initiation (LGC P32, AEA 410+10000)		
		LGC Power-Up (required)		Ref para 4.6.1.1.
		LGC Self-Test (desired)		Ref para 4.6.1.13.
		LGC time valid (required)		LGC/CMC Clock Synchronization Routine (R33) (para 4.6.1.15)
		LGC state vector valid (required)		LGC Update Program (P27) (para 4.6.1.7) and, when possible, LM Rendezvous Navigation Program (P20) (para 4.8.2.1). If P20 is operating, radar sighting marks are automatically made approximately once per minute. Number of marks (M) is displayed in R1 with N45.
		IMU Power-Up (LGC Operating) (desired)		Ref para 4.6.1.3. ISS should be on 15 minutes before thrusting maneuver.
		IMU Orientation Determination Program (P51) (desired)		Ref para 4.9.1.1. Display of actual MGA in R3, with N45 during final pass, will not occur if IMU orientation is not known.
			AGS Power-Up (required)	Ref para 4.6.2.1.
			AEA Self-Test (desired)	Ref para 4.6.2.3.
			AGS time valid (required)	AGS Manual Absolute Time Initialization procedure (para 4.6.2.6) or AGS Initialization Routine (R47) (para 4.6.1.18)
			AGS LM/CSM state vector valid (required)	AGS Initialization Routine (R47) (para 4.6.1.18) or AGS Manual LM State Vector Update/Initialization procedure (para 4.6.2.7) and AGS Manual CSM State Vector Update/Initialization procedure (para 4.6.2.9). AGS Manual Rendezvous Radar LM State Vector Update Ref para 4.8.2.2.

PRETHR

CREW-MAN	PNL	PROCEDURES		REMARKS
		4.7.1.2 Coelliptic Sequence Initiation (LGC P32, AEA 410+10000) (cont)		
				If GUID CONT sw - AGS, select AEA attitude hold: Key DEDA C 400+0000E, or S/C: AGS sw - ATT HOLD If AEA attitude hold not selected when in AGS control, attitude maneuvers at 5° and/or 10°/second may occur.
	1		AGS Wb vector valid (desired)	AGS Wb Vector Update (para 4.6.2.15). Valid Wb vector is required if steering selector address 623 = +10000.
		1. Key V37E 32E		
		2. FL V06 N11 — TIG (CSI) R1 00XXX hr R2 000XX min R3 0XX.XX sec Alternatives: a. To display time of apoapsis with initial zeroes, Key PRO or Key V25E & load any negative value b. To accept nonzero & non-negative TIG (CSI) computed in response to a. above: Record TIG (CSI) Key PRO c. To reject TIG (CSI): Key V25E - Load desired TIG (CSI) Key PRO	1. Establish altitude/altitude rate display: RNG/ALT MON sw - ALT/ALT RT MODE SEL sw - AGS	Ref para 4.5.3.9. Initial display is always zero. Negative or zero value causes time of apoapsis display. (Useful after abort.)

CREW-MAN	PNL	PROCEDURES		REMARKS
		4.7.1.2 Coelliptic Sequence Initiation (LGC P32, AEA 410+10000) (cont)		
			2. Select CSI guidance mode: Key DEDA C 410+10000E CAUTION Time overflow will occur if selected earlier than 136 min before ignition time.	Enter targeting before selecting CSI routine. If new targeting or new navigational updates are entered, reinitialize CSI routine by entering 410+00000, then 410+10000. Valid CSI solution should not be attempted earlier than 136 minutes before tigA.
		3. FL V06 N55 R1 N XXXXX R2 E XXX.XX° R3 (R1 code) 00000 Accept: Record values. Key PRO Reject: Key V25E - Load desired parameters		If R3 = 0: When R1 is 00001, TIG (CDH) should occur at first apsidal crossing; when R1 is 00002, second apsidal crossing; etc. If R3 ≠ 0: TIG (CDH) at CSI + (180°) (R1)
			3. Receive targeting data from MSFN or if PGNS P32 is in process obtain targeting data as follows: a. Obtain: TIG (CSI) step 2 PGNS column TIG (TPI) step 4 PGNS column K from last performance of R47. b. Compute: tigA = TIG (CSI)-K tigC = TIG (TPI)-K	AGS Initialization Routine (R47) (para 4.6.1.18).
		4. FL V06 N37 TIG (TPI) R1 00XXX hr R2 000XX min R3 0XX.XX sec Accept: Record TIG (TPI) Key PRO Reject: Key V25E - Load desired TIG (TPI)	4. Enter targeting data: AGS time of CSI (tigA) Key DEDA C 373+XXXXXE (0.1 min) AGS time of TPI (tigC) Key DEDA C 275+XXXXXE (0.1 min) Select apsidal crossing for CDH	

PRETHRU

CREW-MAN	PNL	PROCEDURES		REMARKS
		4.7.1.2 Coelliptic Sequence Initiation (LGC P32, AEA 410+10000) (cont)		
		5. VFL V16 N45 R1 M XXXXX R2 TFI XXBXX min-sec R3 MGA -00001 R3 displays -00001 at any time other than last pass through program; -00002 during last pass if IMU is not aligned. MGA XXX.XX is displayed on last pass if IMU is aligned. Options: a. To continue mark process: Key V32E - Go to step 6 b. To terminate mark process, do final pass through program: Key PRO	Key DEDA C 416+X0000E X = 1 - CDH transfer at 0.5 orbital period after CSI X = 3 - CDH transfer at 1.5 orbital periods after CSI Zero out-of-plane velocity to be gained: Key DEDA C 451+00000E If thrusting is to be along X-axis: Key DEDA C 623+X0000E X = 0 - Z-axis parallel to CSM orbit plane X = 1 - Z-axis specified by Wb vector	
			5. Enter LOS angle at TPI (octal B7 cotangent): Key DEDA C 605+XXXXXE	Nominal value is +00777 (preloaded before launch). Range is +01277 to +00135. Cotangents of angles in octal form with binary shift (B7): Angle — Cotangent (Octal B7; DEDA load is + sign and five digits) 20 — 01277 26.6 — 00777 26.6° is nominal value between LOS to CSM and local horizontal at desired TPI time, as used in CSI computations (LM below and behind CSM). 28.3 — 00733 70 — 00135

CREW-MAN	PNL	PROCEDURES	REMARKS
		4.7.1.2 Coelliptic Sequence Initiation (LGC P32, AEA 410+10000) (cont)	
		6. Read out predicted radial velocity at CSI Key DEDA C 477R (0.1/1 fps)	Parenthetical quantization notation: lunar mission/earth mission.
		7. Check CSI solution after CSI solution is found (approx 2 sec): Total velocity-to-be-gained magnitude for CSI maneuver: Key DEDA C 370R (+0.1/1 fps)	Exclusive of out-of-plane velocity unless address 451 ≠ 00000.
		Downrange velocity to be gained in CSI maneuver - Key DEDA C 450R (±0.1/1 fps)	
		Differential altitude at predicted time of CDH - Key DEDA C 402R (+0.1 nm)	Negative value indicates LM is higher than CSM.
		Predicted coast time from CSI to CDH - Key DEDA C 372R (+0.1 min)	Sixty or eighty minutes are currently suggested approximate values for this time.
		LM-to-CSM phase angle at CSI - Key DEDA C 303R (0.01°)	
		Δr at CSI - Key DEDA C 314R (0.1 nm)	
		If step 7 indicates acceptable CSI solution, go to step 9; if not, perform step 8.	

PRETHR

CREW-MAN	PNL	PROCEDURES		REMARKS
		4.7.1.2 Coelliptic Sequence Initiation (LGC P32, AEA 410+10000) (cont)		
			8. Recompute CSI maneuver: a. Receive new targeting parameters from MSFN. or b. Generate new TPI time.	If lighting is important consideration in rendezvous, new TPI time would probably be present TPI plus one orbital period.
		6. Poss FL V05 N09 - Alarm in up to three registers R1 00XXX R2 00XXX R3 00XXX PROG lt - on Possible alarms: 00600 - Imaginary roots on first iteration 00606 - ΔV exceeds maximum (1000 fps) 00605 - Number of iterations exceed loop maximum (15) 00601 - CSI Hp <85 nm (earth orbit) or 35,000 ft (lunar orbit) 00602 - CDH Hp <85 nm (earth orbit) or 35,000 ft (lunar orbit) 00603 - CSI to CDH time <10 min 00604 - CDH to TPI time <10 min Key RSET & V32E - recycle to step 2, adjust input parameters		
			9. If thrusting is to be along Z-body-axis: Key DEDA C 507+10000E Key DEDA C 400+20000E	
		7. FL V06 N75 R1 Δalt (CDH) XXXX.X nm R2 ΔT (CSI/CDH) XXBXX min-sec R3 ΔT (CDH/TPI) XXBXX min-sec Record values Key PRO		Times shown in R2 and R3 are modulo 60 minutes, i.e., remainder in minutes and seconds after dividing time in seconds by 3600 (60 times 60) seconds. TIG(CDH) is available, key V06 N13E.

CREW-MAN	PNL	PROCEDURES		REMARKS
		4.7.1.2 Coelliptic Sequence Initiation (LGC P32, AEA 410+10000) (cont)		
		8. FL V06 N81 - CSI ΔV(LV) R1 X XXXX.X fps R2 Y XXXX.X fps R3 Z XXXX.X fps Accept: Record values Key PRO Reject: Key V25E - Load desired data		New value of ΔVY based on use of R36 may be substituted to obtain out-of-plane corrections (para 4.7.2.1). For AGS Out-of-Plane maneuver, ref para 4.7.3.1.
		9. FL V06 N82 - CDH ΔV(LV) R1 X XXXX.X fps R2 Y XXXX.X fps R3 Z XXXX.X fps Record values Key PRO		If ΔV(LV) for CSI has been modified by crew, modification will not be reflected in LGC-computed values for CDH ΔV(LV). Unlike ΔV(LV) for CSI, these values cannot be written over.
			10. Read out time to maneuver: Key DEDA C 310R (0.01 min)	
		10. FL V16 N45 R1 M XXXXX R2 TFI XXBXX min-sec R3 MGA XXX.XX° R3 will display: a. -00001 if this is not last pass through program b. -00002 if this is last pass & IMU is not aligned c. XXX.XX° MGA with + X-axis aligned with thrust vector		R1 display of M will be 00000 if RR data are not taken. MGA (XXX.XX°) is displayed on last pass if IMU is aligned.

CREW-MAN	PNL	PROCEDURES		REMARKS
		4.7.1.2 Coelliptic Sequence Initiation (LGC P32, AEA 410+10000) (cont)		
		Options: a. If this was not last pass through program: (1) To terminate mark process & accomplish final pass - Key PRO - Return to step 6 (2) To continue mark process - Key V32E, recycle to step 6 b. If this was last pass through program: Set EVNT TMR ind to TFI.		If radar data are entered into AEA after switching to External ΔV or if navigation update is made, repeat AGS step 2.
			11. Set EVNT TMR ind to time to maneuver.	Ref para 4.13.6.
		11. Transmit maneuver parameters CSI ΔV(LV) (N81) to CSM. Key PRO	12. Select External ΔV guidance routine: Key DEDA C410+50000E	Ref para 4.7.1.1. To permit monitoring of CSI parameters, it is suggested that External ΔV guidance routine not be selected until 4 or 5 minutes before ignition.
		12. FL V37 N-- Select appropriate thrust procedure, XXE - Exit P32	13. Perform appropriate thrust procedure.	Ref para 4.10.
		4.7.1.3 Constant Δ Altitude (LGC P33, AEA 410+20000)		Purpose of Constant Δ Altitude procedure is to calculate parameters, based on maneuver data approved and keyed into LGC/AEA, for CDH; to display dependent variables for CDH maneuver; to display to, and receive approval from, astronaut/MSFN; and to store CDH target parameters for use by desired thrusting procedure.
		LGC Power-Up (required)		Ref para 4.6.1.1.
		LGC Self-Test (desired)		Ref para 4.6.1.13.
		LGC time valid (required)		LGC/CMC Clock Synchronization Routine (R33) (para 4.6.1.15)

CREW-MAN	PNL	PROCEDURES		REMARKS
		4.7.1.3 Constant Δ Altitude (LGC P33, AEA 410+20000) (cont)		
		LGC state vector valid (required)		LGC Update Program (P27) (para 4.6.1.7) and, when possible, LM Rendezvous Navigation Program (P20) (para 4.8.2.1). If P20 is operating, radar sighting marks are made automatically about once per minute. Number of marks (M) is displayed in R1 with N45.
		IMU Power-Up (LGC Operating) (desired)		Ref para 4.6.1.3. ISS should be on 15 minutes before thrusting maneuver.
		IMU Orientation Determination Program (P51) (desired)		Ref para 4.9.1.1. Display of actual MGA in R3, with N45 during final pass, will not occur if IMU orientation is not known.
		Coelliptic Sequence Initiation (LGC P32, AEA 410+10000) (required)		Ref para 4.7.1.2.
			AGS Power-Up (required)	Ref para 4.6.2.1.
			AEA Self-Test (desired)	Ref para 4.6.2.3.
			AGS time valid (required)	AGS Manual Absolute Time Initialization procedure (para 4.6.2.6) or AGS Initialization Routine (R47) (para 4.6.1.18)
			AGS LM/CSM state vector valid (required)	AGS Initialization Routine (R47) (para 4.6.1.18) or AGS Manual LM State Vector Update/Initialization (para 4.6.2.7) and AGS Manual CSM State Vector Update/Initialization procedure (para 4.6.2.9). AGS Manual Rendezvous Radar LM State Vector Update (para 4.8.2.2).

PRETHRUS

CREW-MAN	PNL	PROCEDURES		REMARKS
		4.7.1.3 Constant Δ Altitude (LGC P33, AEA 410+20000) (cont)		
				If GUID CONT sw - AGS, select AEA attitude hold: Key DEDA C 400+00000E, or S/C: AGS sw - ATT HOLD If AEA attitude hold is not selected when in AGS control, attitude maneuver at 5° and/or 10°/second may occur.
			Wb vector valid (desired)	AGS Wb Vector Update (para 4.6.2.15) Valid Wb vector is required if steering selector address 623 = +10000.
			1. Establish altitude/altitude rate display: RNG/ALT MON sw - ALT/ALT RT MODE SEL sw - AGS	Ref para 4.5.3.9.
			2. Select CDH routine: Key DEDA C 410+20000E	CDH solution will be invalid before tigB minus 136 minutes. This initially invalid solution could occur when CDH is to be performed at 1.5 orbital periods after CSI.
			3. Zero out-of-plane velocity to be gained: Key DEDA C 451+00000E	
			4. Perform AGS targeting: a. If CSI (but not PCI) was performed before CDH, & CDH was selected before LM & CSM navigation update, no targeting is required. b. Otherwise obtain tigB from MSFN & enter into AEA: Key DEDA C 373+XXXXXE (0.1 min)	

CREW-MAN	PNL	PROCEDURES		REMARKS
		4.7.1.3 Constant Δ Altitude (LGC P33, AEA 410+20000) (cont)		
		1. Key V37E 33E		
		2. FL V06 N13 - TIG (CDH) R1 00XXX hr R2 000XX min R3 0XX.XX sec Accept: Record data. Key PRO - Go to step 6 Reject: Key V25E - Load desired data		
		3. Poss FL V05 N09 - Alarm 00611 - No solution for given CDH parameters PROG lt - on Key RSET Options; a. Key V32E - Recycle to step 2, readjust TIG (CDH) b. Key PRO - Proceed with inaccurate data c. Key V34E - Terminate FL V37 N-- Key XXE		
		4. FL V06 N75 R1 Δ alt (CDH) XXXX.X nm R2 ΔT (CDH/TPI) XXBXX min-sec R3 ΔT (TPI/nomTPI) XXBXX min-sec Record values. Key PRO	5. Verify solutions: Display Δr Key DEDA 402R (0.1 nm) Compare with R1 Δ alt	Parenthetical quantization notation: lunar mission/earth mission.

PRETHRU

CREW-MAN	PNL	PROCEDURES		REMARKS
		4.7.1.3 Constant Δ Altitude (LGC P33, AEA 410+20000) (cont)		
		5. FL V06 N81 - CDH ΔV(LV) R1 X XXXX.X fps R2 Y XXXX.X fps R3 Z XXXX.X fps Accept: Record values Key PRO Reject: Key V25E - Load desired ΔV(LV)	Display total velocity-to-be-gained magnitude in CDH: Key DEDA C 370R (0.1/1 fps) Compare with N81.	Negative value indicates retrograde attitude, Z-axis up (for X-axis thrust). New ΔVY value, based on use of R36 (V90), may be used to obtain out-of-plane corrections. Ref para 4.7.2.1 For AGS out-of-CSM-plane burn, ref para 4.7.3.1.
			Display altitude rate at CDH: Key DEDA C 477R (0.1/1 fps) Record value. Display downrange velocity to be gained: Key DEDA C 450R (0.1/1 fps) Display radial velocity to be gained: Key DEDA C 452R (0.1/1 fps)	
		6. FL V16 N45 R1 M XXXXX R2 TFI XXBXX min-sec R3 MGA XXX.XX° R3 will display: a. -00001 if not last pass through program b. -00002 if this is last pass & IMU is not aligned c. XXX.XX° MGA with +X-axis aligned with thrust vector Options: a. If not last pass through program: (1) To terminate mark process perform final pass, key PRO, & go to step 3.	6. Read out time to CDH maneuver: Key DEDA C 310R (0.01 min) Compare with TFI in R2.	R1 display of M will be 00000 if RR data are not taken. MGA (XXX.XX°) is displayed on last pass if IMU is aligned.

CREW-MAN	PNL	PROCEDURES		REMARKS
		4.7.1.3 Constant Δ Altitude (LGC P33, AEA 410+20000) (cont)		
			7. If thrusting is along X-axis: Key DEDA C 623+X0000E X = 0 - Z-axis parallel to CSM orbit plane X = 1 - Z-axis specified by Wb vector If thrusting is along Z-axis: Key DEDA C 507+10000E Key DEDA C 400+20000E	If radar data are entered into AEA after switching to External ΔV or if navigation update is made, repeat AGS step 2.
		(2) To continue mark process - Key V32E - Recycle to step 3		
		b. If this was last pass through program - Set EVNT TMR ind to TFI (in R2), transmit maneuver parameters CDH ΔV (LV) (N81) to CSM, key PRO, go to step 7	8. Set EVNT TMR ind to TΔ.	Ref para 4.13.6.
			9. Select External ΔV guidance routine: Key DEDA C 410+50000E	Ref para 4.7.1.1. To permit monitoring of CDH parameters, it is suggested that External ΔV guidance routine not be selected until 4 or 5 minutes before ignition time.
		7. FL V37 N-- Select appropriate thrust procedure, Key XXE - Exit P33.	10. Select appropriate thrust procedure.	Ref para 4.10.

PRETHRU

CREW-MAN	PNL	PROCEDURES	REMARKS
		4.7.1.4 Transfer Phase Initiation (LGC P34, AEA 410+30000, Search; & 410+40000, Execute)	Purpose of Transfer Phase Initiation procedure is to calculate required ΔV and other initial conditions required by LGC/AEA for LM execution of TPI maneuver, given: a. Time of ignition, TIG (TPI), or elevation angle (E) of LM/CSM LOS at TIG (TPI) b. Central angle of transfer of passive vehicle (CSM) from TIG (TPI) to time of intercept. TPI also calculates TIG (TPI) given E, or E given TIG (TPI). TPI procedure may be performed concurrently with P20 (LGC). If P20 is operating, radar marks are taken automatically, approximately once per minute when enabled by track and update flags. If AGS is in control, it can display LOS elevation angle for selected time interval in future so that, when desired angle is displayed, selected time interval is available for final crew preparation for maneuver.
		LGC Power-Up (required)	Ref para 4.6.1.1.
		LGC Self-Test (desired)	Ref para 4.6.1.13.
		LGC time valid (required)	LGC/CMC Clock Synchronization Routine (R33) (para 4.6.1.15)
		LGC state vector valid (required)	LGC Update Program (P27) (para 4.6.1.7) and, when possible, LM Rendezvous Navigation Program (P20) (para 4.8.2.1). If P20 is operating, radar marks are made automatically about once per minute. Number of marks (M) is displayed in R1 with N45.

CREW-MAN	PNL	PROCEDURES		REMARKS
		4.7.1.4 Transfer Phase Initiation (LGC P34, AEA 410+30000, Search; & 410+40000, Execute) (cont)		
		IMU Power-Up (LGC Operating) (desired)		Ref para 4.6.1.3. ISS should be on 15 minutes before thrusting maneuver.
		IMU Orientation Determination Program (P51) (desired)		Ref para 4.9.1.1. Display of actual MGA in R3, with N45 during final pass, will not occur if IMU orientation is not known.
			AGS Power-Up (required)	Ref para 4.6.2.1.
			AEA Self-Test (desired)	Ref para 4.6.2.3.
			AGS time valid (required)	AGS Manual Absolute Time Initialization procedure (para 4.6.2.6) or AGS Initialization Routine (R47) (para 4.6.1.18)
			AGS LM/CSM state vector valid (required)	AGS Initialization Routine (R47) (para 4.6.1.18) or AGS Manual LM State Vector Update/Initialization procedure (para 4.6.2.7) and AGS Manual CSM State Vector Update/ Initialization procedure (para 4.6.2.9). AGS Manual Rendezvous Radar LM State Vector Update Ref para 4.8.2.2. If GUID CONT sw - AGS, select AEA attitude hold: Key DEDA C 400+00000E, or S/C: AGS sw - ATT HOLD If AEA attitude hold is not selected when in AGS control, attitude maneuver at 5° and/or 10° sec may occur.

PRETHRUS

CREW-MAN	PNL	PROCEDURES	REMARKS
		4.7.1.4 Transfer Phase Initiation (LGC P34, AEA 410+30000, Search; & 410+40000, Execute) (cont)	
		Wb vector valid (desired)	AGS Wb Vector Update (para 4.6.2.15). Valid Wb vector is required if steering selector address 623 = +10000
		1. Enter initial targeting data: a. Enter number of minutes before rendezvous that node occurrence is desired - Key DEDA C 306+XXXXXE (0.01 min)	Zero initial input will allow valid readout of VF (DEDA address 371, step 4d).
		b. Enter time duration of transfer- Key DEDA C 307+XXXXXE (0.01 min)	To avoid indeterminate values at 0°, 180°, and 360°, address 307 must not contain following values: Earth orbit: <00500 04200 to <05300 09000 to <10000 >13000 Lunar orbit: <00350 05700 to <06500 >11900
		If AGS in control, go to step 3.	
		2. Select mode & target for AGS in followup (if search mode is not desired): a. Select TPI execute - Key DEDA C 410+40000E	
		b. Enter TPI (tigC) - Key DEDA C 373+XXXXXE (0.1 min)	tigC = TIG (TPI) - K.
		c. Go to steps 3e & 3f and verify solution.	
		1. Key V37E 34E	

LM 3231

CREW-MAN	PNL	PROCEDURES		REMARKS
		4.7.1.4 Transfer Phase Initiation (LGC P34, AEA 410+30000, Search; & 410+40000, Execute) (cont)		
		2. FL V06 N37 - TIG (TPI) R1 00XXX hr R2 000XX min R3 0XX.XX sec Accept: Key PRO Reject: Key V25E - Load desired TIG (TPI)		P34 requires initial value of TIG (TPI) to be within 30 minutes of actual TPI time.
		3. FL V06 N55 R1 N XXXXX R2 E XXX.XX° R3 CENTANG XXX.XX°		N is defined as follows: N = 0 (initial display is +00000)- specifies Kepler conic integration with no target offset (faster than precision integration) N ≠ 0 - specifies precision integration with N target offsets (useful in earth orbit) E is elevation angle between LM/CSM LOS and LM local horizontal at TIG (TPI) referenced to direction of flight. Initial Display is +000.00°. A zero value in R2 requests that E be calculated based on previous display of TIG (TPI); a nonzero value of E, that TIG (TPI) be calculated based on E. CENTANG is orbital central angle of passive vehicle during transfer from TIG (TPI) to time of intercept.
		Alternatives: a. To accept present values of N, E, and CENTANG - Record values Key PRO - Go to step 9 b. To reject present values of N, E, or CENTANG - Key V25E, load N, E, & CENTANG as desired. Key PRO - Go to step 9 c. If program is to be terminated: Key V34E FL V37 N-- Key XXE, exit P34		

PRETHRU

CREW-MAN	PNL	PROCEDURES		REMARKS
		4.7.1.4 Transfer Phase Initiation (LGC P34, AEA 410+30000, Search; & 410+40000, Execute) (cont)		
		4. Poss FL V05 N09 - Alarm 00611 - No TIG for given E PROG lt - on Key RSET & PRO - Go to step 2	3. Select modes & targeting for AGS in control (or using search mode): a. Select TPI search mode - Key DEDA C 410+30000E b. Enter Δ time from TPI execute (counted down to ignition) - Key DEDA C 310+XXXXXE (0.01 min) c. Read out θ LOS - Key DEDA C 303R (0.01°) When θ LOS = preselected value (approximately PGNCS E): d. Select TPI execute mode - Key DEDA C 410+40000E e. Read out time to ignition - Key DEDA C 310R (0.01 min) f. Set EVNT TMR ind to count-down to time to ignition using value in address 310.	Address 310 must be entered after selecting TPI search mode (410+30000); otherwise, entry is lost. Valid solution should not be attempted earlier then 136 minutes before targeted rendezvous time. (Targeted rendezvous time is tigC + 6J.) Ref para 4.13.6.
		5. FL V06 N37 - TIG (TPI) R1 00XXX hr R2 000XX min R3 0XX.XX sec Record TIG (TPI) Key PRO - Go to step 7		
		6. FL V06 N55 R1 N XXXXX R2 E XXX.XX° R3 CENTANG XXX.XX° Record data. Key PRO		

CREW-MAN	PNL	PROCEDURES	REMARKS
		4.7.1.4 Transfer Phase Initiation (LGC P34, AEA 410+30000, Search; & 410+40000, Execute) (cont)	
		7. FL V06 N58 R1 Hp XXXX.X nm R2 ΔV(TPI) XXXX.X fps R3 ΔV(TPF) XXXX.X fps Record data. Key PRO	Hp is altitude of perifocus above launch pad radius in earth orbit; above lunar radius at most recently defined landing site, in lunar orbit. ΔV(TPF) is required impulsive ΔV to accomplish intercept maneuver (TPF) at calculated time of intercept.
		4. Verify TPI solution: a. Read out time to rendezvous - Key DEDA C 311R (0.01 min)	To verify central angle of active vehicle is not within 170° to 190°: Key V06 N52E R1 XXX.XX ACTCENT (active vehicle central angle) R2 ------- R3 ------- Key KEY REL If within 170° to 190°, reenter program & adjust input.
		b. Read out LOS angle - Key DEDA C 303R (0.01°)	
		c. Read out ΔV to be gained - Key DEDA C 370R (0.1/1 fps)	Parenthetical quantization notation: lunar mission/earth mission.
		d. Read out braking velocity (VF)- Key DEDA C 371R (0.1/1 fps)	
		e. Read out TPI time - Key DEDA C 373R (0.1 min)	
		f. Read out transfer orbit perifocus - Key DEDA C 402R (0.1 nm)	

PRETHRU

CREW-MAN	PNL	PROCEDURES		REMARKS
		4.7.1.4 Transfer Phase Initiation (LGC P34, AEA 410+30000, Search; & 410+40000, Execute) (cont)		
			g. If desired, enter nonzero number of minutes before rendezvous that node occurrence is desired Key DEDA C 306 +XXXXXE (0.01 min)	
			h. Read out TPI rendezvous offset time - Key DEDA C 312R (0.01 min)	
			i. Read out transfer time to rendezvous - Key DEDA C 307R (0.01 min)	
		8. FL V06 N81 - ΔV(LV) R1 X XXXX.X fps R2 Y XXXX.X fps R3 Z XXXX.X fps Accept: Record data. Key PRO Reject: Key V25E - Load desired values	j. Read out local level ΔV components of TPI solution - Key DEDA C450R (0.1/1 fps) C451R (0.1/1 fps) C452R (0.1/1 fps)	New ΔVY value, based on use of R36 (V90), may be used to obtain out-of-plane corrections. Ref para 4.7.2.1 ΔV (LOS) are components of required impulsive ΔV in orthogonal coordinate system oriented along LM-to-CSM LOS. LOS 1 is component along unit I LOS 2 is component along unit (HxI)xI LOS 3 is component along unit (HxI) Where, I = unit vector along LOS to CSM H = unit vector along LM orbital momentum vector.

LM 32[illegible], LM 3235

CREW-MAN	PNL	PROCEDURES		REMARKS
		4.7.1.4 Transfer Phase Initiation (LGC P34, AEA 410+30000, Search; & 410+40000, Execute) (cont)		
		9. FL V16 N45 R1 M XXXXX R2 TFI XXBXX min-sec R3 MGA XXX.XX°		M is number of marks made since last thrust maneuver or P20 initiation. TFI is time from TIG (TPI). Sign is - before, + after, TIG (TPI). Maximum reading is 59B59. MGA is middle gimbal angle at TIG (TPI) if LM +X-axis is aligned with initial thrust direction. Sign is +, except: a. When displayed at any time other than last pass through program, value is -00001. b. On last pass, when IMU is not aligned, value is -00002.
		Alternatives: a. Continue marks: Key V32E (recycle), go to (1) Step 6 if LGC is to calculate E or (2) Step 4 if LGC is not to calculate E b. Terminate marks: Key PRO (1) If not final pass, go to (a) Step 6 if LGC is to calculate E or (b) Step 4 if LGC is not to calculate E (2) If this was last pass, FL V37 N-- Key XXE, exit P34 Transmit maneuver parameters TPI ΔV (LV)(N81) to CSM. c. Terminate program: Key V34E FL V37 N-- Key XXE, exit P34	5. If thrusting is along X-axis: Key DEDA C 623+X0000E X = 0 - Z-axis parallel to CSM orbit plane X = 1 - axis specified by Wb vector If thrusting is along Z-axis: Key DEDA C 507+10000E Key DEDA C 400+20000E	If desired: V06 N59E R1 ΔV (LOS 1) XXXX.X fps R2 ΔV (LOS 2) XXXX.X fps R3 ΔV (LOS 3) XXXX.X fps Record data. Key KEY REL If AGS is in followup, before keying PRO after last pass, perform AGS Initialization Routine (R47) (para 4.6.1.18). If radar data are entered into AEA after switching to External ΔV or if navigation update is made, repeat AGS step 3d.

PRETHRU

LM 3231

CREW-MAN	PNL	PROCEDURES		REMARKS
		4.7.1.4 Transfer Phase Initiation (LGC P34, AEA 410+30000, Search; & 410+40000, Execute) (Cont)		
			6. Select External ΔV guidance routine: Key DEDA C 410+50000E	Ref para 4.7.1.1. To permit monitoring of TPI parameters, it is suggested that External ΔV guidance routine not be selected until 4 or 5 minutes before ignition time.
		4.7.1.5 Transfer Phase Midcourse (LGC P35, AEA 410+40000)		
		CAUTION AGS uses direct transfer equations for midcourse corrections (also used for TPI); therefore, guidance mode must not change for this procedure. State vector updates provide information for computing midcourse corrections.		Purpose of Transfer Phase Midcourse procedure is to calculate required ΔV and other initial conditions for TPM maneuver during LM active rendezvous.
		LGC Power-Up (required)		Ref para 4.6.1.1.
		LGC Self-Test (desired)		Ref para 4.6.1.13.
		LGC time valid (required)		LGC/CMC Clock Synchronization Routine (R33) (para 4.6.1.15)
		LGC state vector valid (required)		LGC Update Program (P27) (para 4.6.1.7) and LM Rendezvous Navigation Program (P20) (para 4.8.2.1)
		IMU Power-Up (desired)		Ref para 4.6.1.3. ISS should be on 15 minutes before thrust maneuver.
		IMU Orientation Determination Program (P51) (desired)		Ref para 4.9.1.1. Display of actual MGA in R3, with N45 during final pass, will not occur if IMU orientation is not known.
		TPI program (P34) (required)		Ref para 4.7.1.4. Stores time of intercept in LGC
			AGS Power-Up (required)	Ref para 4.6.2.1.
			AEA Self-Test (desired)	Ref para 4.6.2.3.

LM

CREW-MAN	PNL	PROCEDURES		REMARKS
		4.7.1.5 Transfer Phase Midcourse (LGC P35, AEA 410+40000) (cont)		
			AGS time valid (required)	AGS Manual Absolute Time Initialization procedure (para 4.6.2.6) or AGS Initialization Routine (R47) (para 4.6.1.18)
			AGS LM/CSM state vector valid (required)	AGS Initialization Routine (R47) (para 4.6.1.18) or AGS Manual LM State Vector Update/Initialization procedure (para 4.6.2.7) and AGS Manual CSM State Vector Update/ Initialization procedure (para 4.6.2.9) or AGS Manual Rendezvous Radar LM State Vector Update procedure (para 4.8.2.2) If GUID CONT sw - AGS, select AEA attitude hold: Key DEDA - C 400+00000E, or S/C: AGS sw - ATT HOLD If AEA attitude hold is not selected when in AGS control, attitude maneuvers at 5° and/or 10°/second may occur.
			Wb vector valid (desired)	AGS Wb Vector Update (para 4.6.2.15). A valid Wb vector is required if address 623 = +10000
			1. Reselect TPI Execute: Key DEDA C 410+40000E	
		1. Key V37E 35E Go to step 3.	2. Deleted	
			3. Determine targeted time of TPI burn & time duration of transfer. Original time of rendezvous can be preserved by specifying new targeted time of TPI burn & adjusting duration of transfer. a. Read out AGS computer time of TPI Key DEDA C 373R (0.1 min) Record tigC.	

PRETHRU

LM 3231

CREW-MAN	PNL	PROCEDURES		REMARKS
		4.7.1.5 Transfer Phase Midcourse (LGC P35, AEA 410+40000) (cont)		
			b. Read out time from TPI to rendezvous - Key DEDA C 307R (0.01 min) Record value	
			c. Enter time of midcourse - Key DEDA C 373+XXXXXE (0.1 min)	
			d. Enter adjusted time duration of transfer - Key DEDA C 307+XXXXXE (0.01 min)	Use timeline values, compute new value, or receive from MSFN.
			e. Set node time prior to nominal rendezvous to zero - Key DEDA C 306+00000E (0.01 min)	Setting address 306 to zero avoids possibility of thrusting during invalid 2-second computer cycle.
			f. Read out VG - Key DEDA C 370R (0.1/1 fps)	
		2. FL V06 N81 - ΔV(LV) R1 X XXXX.X fps R2 Y XXXX.X fps R3 Z XXXX.X fps Accept: Record data Key PRO Reject: Key V25E - Load desired ΔV(LV)		Rendezvous Out-of-Plane Display Routine (R36) may be used to define out-of-plane velocity corrections to be achieved by altering ΔVY. If desired: V06 N59E R1 ΔV(LOS 1) XXXX.X fps R2 ΔV(LOS 2) XXXX.X fps R3 ΔV(LOS 3) XXXX.X fps Record data Key KEY REL

LM 3231

CREW-MAN	PNL	PROCEDURES	REMARKS
		4.7.1.5 Transfer Phase Midcourse (LGC P35, AEA 410+40000) (cont)	
		4. If thrusting is along X axis: Key DEDA C 623+X0000E X = 0 - Z-axis parallel to CSM orbit plane X = 1 - Z-axis specified by Wb vector If thrusting along Z axis: Key DEDA C 507+10000E Key DEDA C 400+20000E	To verify central angle of active vehicle is not within 170° to 190°: Key V06 N52E R1 XXX.XX° ACTCENT (active vehicle central angle) R2 ------- R3 ------- If within 170° to 190°, wait as necessary, Key KEY REL
		3. FL V16 N45 R1 M XXXXX R2 TFI XXBXX min-sec R3 MGA XXX.XX°	
		5. Select External ΔV guidance routine.	Ref para 4.7.1.1. To permit monitoring of TPM parameters, it is suggested that External ΔV not be selected until 4 or 5 minutes before ignition.
		6. Select RCS thrust.	Ref para 4.10.1.3.
		a. Continue marks - Key V32E - Go to step 2 b. To terminate mark & do final pass - Key PRO - Go to step 2 (If final pass go to step 4).	R3 will display: a. -00001 if this is not last pass. b. -00002 if this is last pass and IMU orientation is not known. c. XXX.XX MGA with +X-axis aligned with thrust vector.
		4. FL V37 N-- Key XXE - Exit P35	If midcourse correction is not required (ΔV <TBD fps), continue marks.

PRETHR

CREW-MAN	PNL	PROCEDURES	REMARKS
		4.7.2 PGNCS	
		4.7.2.1 Rendezvous Out-Of-Plane Display Routine (R36)	
			Purpose of Rendezvous Out-of-Plane Display Routine (R36) is to display LGC-calculated rendezvous out-of-plane parameters. This routine may be used to target plane change ΔV at nominal burns or with External ΔV (LGC P30, AEA 410+50000) (para 4.7.1.1) and RCS Thrust Program (P41) With AGS Followup/In Control (para 4.10.1.3) for additional plus or minus Y-axis translations, such as PCI maneuver.
		LGC Power-Up (required)	Ref para 4.6.1.1.
		LGC Self-Test (desired)	Ref para 4.6.1.3.
		LGC time valid	LGC/CMC Clock Synchronization Routine (R33) (para 4.6.1.15)
		LGC state vector valid	LGC Update Program (P27) (para 4.6.1.7)
			To monitor progress of state vector integration, time (GET) to which state vector integration process has presently calculated state vector is available as follows: Key V16 N38E - TET R1 00XXX hr R2 000XX min R3 0XX.XX sec To release DSKY: Key KEY REL
		1. Key V90E Poss OPR ERR lt - on Exit R36, Key RSET	This routine should not be called while average G is running. OPR ERR lt - on if average g is on or if another extended verb from R76 is active.
		2. FL V06 N16 - T (Event) R1 00XXX hr R2 000XX min R3 0XX.XX sec Accept: Key PRO Reject: Key V25E - Load new T (Event)	T (Event) is initialized to present TIG as defined by program in process.

LM 3231

CREW-MAN	PNL	PROCEDURES	REMARKS
		4.7.2.1 Rendezvous Out-Of-Plane Display Routine (R36) (cont)	
		3. FL V06 N90 - Out-of-plane parameters R1 Y XXX.XX nm R2 Y rate XXX.XX fps R3 Ψ XXX.XX° a. To receive another data point: Key V32E - Go to step 2 b. To terminate: Key PRO, exit R36	R1 and R2 display out-of-plane position and velocity; R3 displays angle between LOS and forward direction, measured in local horizontal plane. Y = distance between CSM orbit plane and LM measured along line defined by V x R of CSM where: V = CSM initial velocity vector R = CSM radial position vector Y rate = rate of change of Y with following sign convention: + if Y is increasing algebraically - if Y is decreasing algebraically (If this parameter is to be nulled, magnitude of Y rate is used, but with opposite sign, in prethrust program; i.e., P30 and P32 through P35.) Ψ = angle of LM orbital plane and projection of LOS to CSM onto LM horizontal plane.
		4.7.2.2 Target ΔV Program (CSM) (P76)	Purpose of Target ΔV Program (CSM) (P76) is to notify LGC of orbital parameter changes by CSM and to provide, to LGC, ΔV for CSM impulsive state velocity update.
		LGC Power-Up (required)	Ref para 4.6.1.1.
		LGC time valid (required)	LGC/CMC Clock Synchronization Routine (R33) (para 4.6.1.15)
		LGC CSM state vector valid (Premaneuver) (required)	LGC Update Program (P27) (para 4.6.1.7) or LM Rendezvous Navigation Program (P20) (para 4.8.2.1) or Lunar Surface Navigation Program (P22) (para 4.8.3.1) with valid LM state vector and P20 or P22 updating CSM state vector.
		1. Key V37E 76E	
		2. FL V06 N33 - TIG (CSM) R1 00XXX hr R2 000XX min R3 0XX.XX sec Accept: Key PRO Reject: Key V25E - Load correct TIG (CSM)	

PRETHRUS

LM 3231

CREW-MAN	PNL	PROCEDURES	REMARKS
		4.7.2.2 Target ΔV Program (CSM) (P76) (cont)	
		3. FL V06 N84 -- ΔV(CSM) at TIG (CSM) R1 X XXXX.X fps R2 Y XXXX.X fps R3 Z XXXX.X fps Accept: Key PRO	N84 is available as an optional display in subsequent use of P3X or P72 through P75. NODOFLAG is set after PRO is keyed causing 1520 alarm (V37 request is not permitted at this time) if V37E xxE, with xx ≠ 00 is attempted during integration. NODOFLAG is reset after completion of integration.
		Reject: Key V25E - Load desired ΔV	Data loaded should be actual ΔV at TIG (CSM).
		4. FL V37 N-- Key XXE - Exit P76	To resume P20 RR state vector updating, select an orbital prethrust program (P30 to P35, P72 to P75). If Rendezvous Navigation Program (P20) or Lunar Surface Navigation Program (P22) is in process, P76 must be selected before CSM thrusting maneuver.
		4.7.2.3 Target ΔV Program (LM) (P77)	Purpose of Target ΔV Program (LM) (P77) is to notify LGC of orbital parameter changes by LM and to provide, to LGC, ΔV for LM impulsive state velocity update.
		LGC Power-Up (required)	Ref para 4.6.1.1.
		LGC time valid (required)	LGC/CMC Clock Synchronization Routine (R33) (para 4.6.1.15)
		LGC LM state vector valid (premaneuver) (required)	LGC Update Program (P27) (para 4.6.1.7) or LM Rendezvous Navigation Program (P20) with valid CSM State Vector and P20 updating LM state vector (para 4.8.2.1).
		1. Key V37E 77E	
		2. FL V06 N33 - TIG (LM) R1 00XXX hr R2 000XX min R3 0XX.XX sec Accept: Key PRO Reject: Key V25E - Load correct TIG (LM)	

LM 3231

CREW-MAN	PNL	PROCEDURES	REMARKS
		4.7.2.3 Target ΔV Program (LM) (P77) (cont)	
		3. FL V06 N81 - ΔV (LV) at TIG (LM) R1 X XXXX.X fps R2 Y XXXX.X fps R3 Z XXXX.X fps Accept: Key PRO	ΔV in N81 is also written into N84 by LGC so that it is available as an optional display in subsequent use of P3X or P72 through P75. (N81 is overwritten by referenced programs.) NODOFLAG is set after PRO is keyed causing 1520 alarm (V37 request is not permitted at this time) if V37E xxE, with xx≠00 is attempted during integration. NODOFLAG is reset after completion of integration.
		Reject: Key V25E - Load desired ΔV	Data loaded should be actual ΔV at TIG (LM).
		4. FL V37 N-- Key XXE - Exit P77	To resume P20 RR state vector updating, select an orbital prethrust program (P30 to P35, P72 to P75). If Rendezvous Navigation Program (P20) is in process, P77 must be selected before LM thrusting maneuver.
		4.7.3 AGS	
		4.7.3.1 AGS Out-of-Plane Maneuver	
		AGS Power-Up (required)	Ref para 4.6.2.1.
		AEA Self-Test (desired)	Ref para 4.6.2.3.
		AGS time valid (required)	AGS Manual Absolute Time Initialization Procedure (para 4.6.2.6) or AGS Initialization Routine (R47) (para 4.6.1.18)
		AGS LM/CSM state vector valid (required)	AGS Initialization Routine (R47) (para 4.6.1.18) or AGS Manual LM State Vector Update/Initialization procedure (para 4.6.2.7) and AGS Manual CSM State Vector Update/Initialization procedure (para 4.6.2.9). AGS Manual Rendezvous Radar LM State Vector Update. Ref para 4.8.2.2
		1. Select External ΔV: Key DEDA C 410+50000E	If GUID CONT sw - AGS, select AEA attitude hold: Key DEDA C 400+00000E, or S/C: AGS sw - ATT HOLD If AEA attitude hold is not selected when in AGS control, attitude maneuvers at 5° and/or 10°/sec may occur.

PRETHRU

CREW-MAN	PNL	PROCEDURES	REMARKS
		4.7.3.1 AGS Out-of-Plane Maneuver (cont)	
		2. After CSI solution has converged & solution checks made, or CDH solution checks made, read out-of-plane velocity: Key DEDA C 263R (0.1/1 fps) Go to step 4 for PCI translation.	Parenthetical quantization notation: lunar mission/ earth mission. Two components of ΔV (ΔVX and ΔVZ) for external ΔV option are computed by CSI and CDH routines. Other component is read out on DEDA (address 263) and a proportion (dependent on desired effect on LM/CSM orbit out-of-plane angle and/or phasing on LM/CSM orbit nodes) is entered in address 451. Three components of ΔV are computed (and stored) by TPI and TPM routines. External ΔV option is used for CSI, CDH, TPI, TPM or PCI burns.
		3. Determine proportion of out-of-plane velocity, with appropriate algebraic sign (same sign to decrease out-of-plane angle), to be entered in ΔVy (obtain from MSFN): Key DEDA C 451±XXXXXE (0.1/1 fps) Read out in-plane horizontal velocity - Key DEDA C 450R (0.1/1 fps)	

CREW-MAN	PNL	PROCEDURES	REMARKS
		4.7.3.1 AGS Out-of-Plane Maneuver (cont)	
			Verify flight program has stored downrange component.
		Read out radial velocity - Key DEDA C 452R (0.1/1 fps) Go to step 5.	Radial velocity should be zero for horizontal maneuver.
		4. For PCI maneuver: Select CSI Routine - Key DEDA C 410+10000E	
		Load absolute time of PCI - Key DEDA C 373+XXXXXE (0.1 min)	
		Read out time to PCI (TΔ) - Key DEDA C 310R (0.01 min)	
		Set EVNT TMR ind to TΔ	
		Select External ΔV - Key DEDA C 410+50000E	
		Read out Vpy - Key DEDA C 263R (0.1/1fps) Record Vpy	
		Enter Vpy as crossrange ΔV (with sign of Vpy) - Key DEDA C 451+XXXXXE(0.1/1fps)	
		Enter zeros in ΔV downrange & ΔV radial velocities - Key DEDA C 450+00000E (0.1/1 fps) Key DEDA C 452+00000E (0.1/1 fps)	
		5. Select thrust procedure.	Ref para 4.10.

PRETHRU

CREW-MAN	PNL	PROCEDURES	REMARKS
		4.7.3.2 <u>AGS Orbit Insertion</u>	Purpose of AGS Orbit Insertion procedure is to enter orbit injection parameters into AEA to place LM into desired orbit.
		CAUTION Use of AGS orbit insertion routine is not recommended in earth orbit, since large terminal altitude rate errors could result. It is recommended that earth orbit insertion burns be performed under control of External ΔV routine.	
		AGS Power-Up (required)	Ref para 4.6.2.1.
		AEA Self-Test (desired)	Ref para 4.6.2.3.
		AGS time valid (required)	AGS Manual Absolute Time Initialization procedure (para 4.6.2.6) or AGS Initialization Routine (R47) (para 4.6.1.18)
		AGS LM/CSM state vector valid (required)	AGS Initialization Routine (R47) (para 4.6.1.18) or AGS Manual LM State Vector Update/Initialization procedure (para 4.6.2.7) and AGS Manual CSM State Vector Update/ Initialization procedure (para 4.6.2.9). AGS Manual Rendezvous Radar State Vector Update. Ref para 4.8.2.2. If GUID CONT sw - AGS, select AEA attitude hold: Key DEDA C 400+00000E, or S/C: AGS sw - ATT HOLD If AEA attitude hold is not selected when in AGS control, attitude maneuvers at 5° and/or 10°/sec may occur.
		1. Select Orbit Insertion mode: Key DEDA C 410+00000E	During thrust maneuver, it is possible to read out predicted burnout radius, DEDA address 347 (100 ft).
		NOTE Orbit insertion targeting data are entered before launch and include variable targeting parameters. For launch after T2 when variable targeting does not apply, perform step 2A; otherwise, perform step 2.	Amount of out-of-plane errors removed in Orbit Insertion can be varied by changing DEDA-accessible constants 5K16 (address 561) and 5K17 (address 611).

CREW-MAN	PNL	PROCEDURES	REMARKS
		4.7.3.2 AGS Orbit Insertion (cont)	
		2. Enter targeting data:	
		CAUTION Targeting for LM/CSM phase angles >90° (absolute value) should not be attempted; range overflow may result. (Typically, range overflow occurs at angles of approximately ±115°.)	
		Injection altitude - Key DEDA C 232+XXXXXE (100/1000 ft)	Parenthetical quantization notation: lunar mission/ earth mission.
		Injection altitude rate lower limit (23J) - Key DEDA C 465+XXXXXE (0.1/1 fps)	
		Semimajor axis targeting term (7J) - Key DEDA C 224+XXXXXE (100/1000 ft)	
		One half of lower limit of apolune radius (8J) - Key DEDA C 225+XXXXXE (100/1000 ft)	
		Retarget value (10J) for 7J when central angle exceeds 12J - Key DEDA C 226+XXXXXE (100/1000 ft)	
		Retarget value (11J) for 4K10 when central angle exceeds 12J - Key DEDA C 673+XXXXXE (octal)	
		Phase angle limit (12J) for retargeting - Key DEDA C 305+XXXXXE (0.01°)	
		Freeze TIG for post-insertion trim maneuver: Read out and record present AGS time Key C 377R (0.1 min) Load present AGS time in as tigD Key C 373+XXXXXE (0.1 min)	
		3. Enter retargeting data:	Step is necessary for launch after T2 when variable targeting does not apply.
		Key DEDA C 305+20000E	Avoids retargeting on phase angle.
		Key DEDA C 662+00000E	Eliminates phase angle dependency.

PRETHRI

CREW-MAN	PNL	PROCEDURES	REMARKS
		4.7.3.2 AGS Orbit Insertion (cont)	
		Load desired semimajor axis 7J - Key DEDA C 224+XXXXXE (100/1000 ft)	
		4. Perform desired thrusting procedure.	Ref para 4.10.
		4.7.4 CSM BACKUP	
		4.7.4.1 CSM Coelliptic Sequence Initiation Targeting Program (P72)	Purpose of CSM Coelliptic Sequence Initiation Targeting Program is to calculate parameters, based on maneuver data approved and keyed into LGC, for CSI and CDH; to display dependent variables to, and receive approval from, astronaut/MSFN; and to store and transmit CSI target parameters for use by desired CSM thrust program.
		LGC Power-Up (required)	Ref para 4.6.1.1.
		LGC Self-Test (desired)	Ref para 4.6.1.13.
		LGC time valid (required)	LGC/CMC Clock Synchronization Routine (R33) (para 4.6.1.15)
		LGC state vector valid (required)	LGC Update Program (P27) (para 4.6.1.7) and, when possible, LM Rendezvous Navigation Program (P20) (para 4.8.2.1). If P20 is operating, radar sighting marks are made automatically about once per minute. Number of marks (M) is displayed in R1 with N45.
		1. Key V37E 72E	
		2. FL V06 N11 - TIG (CSI) R1 00XXX hr R2 000XX min R3 0XX.XX sec Accept: Record TIG (CSI). Key PRO Reject: Key V25E - Load desired TIG (CSI)	Initial display is always zero. Negative or zero value causes display of time of apoapsis (useful after abort).
		3. FL V06 N55 R1 N XXXXX R2 E XXX.XX° R3 CENTANG +00000	If R3 = 0: When R1 is 00001, TIG (CDH) should occur at first apsidal crossing; when R1 is 00002, second apsidal

CREW-MAN	PNL	PROCEDURES	REMARKS
		4.7.4.1 <u>CSM Coelliptic Sequence Initiation Targeting Program (P72)</u> Accept: Record values Key PRO Reject: Key V25E - Load desired parameters 4. FL V06 N37 TIG (TPI) R1 00XXX hr R2 000XX min R3 0XX.XX sec Accept: Record TIG (TPI) Key PRO Reject: Key V25E - Load desired TIG (TPI) 5. FL V16 N45 R1 M XXXXX R2 TFI XXBXX min-sec R3 MGA -00001 Options: a. To continue mark process: Key V32E - Go to step 6 b. To terminate mark process & do final pass through program: Key PRO 6. Poss FL V05 N09 - Alarm in up to three registers R1 00XXX R2 00XXX R3 00XXX PROG lt - on Possible alarms: 00600 - Imaginary roots on first iteration 00606 - ΔV exceeds maximum (1000 fps) 00605 - Number of iterations exceed loop maximum (15) 00601 - CSI Hp <35,000 ft (lunar orbit) or <85 nm (earth orbit) 00602 - CDH Hp <35,000 ft (lunar orbit) or <85 nm (earth orbit) 00603 - CSI to CDH time <10 min 00604 - CDH to TPI time <10 min Key RSET & V32E - Recycle to step 2, adjust input parameters	crossing; etc. If R3 ≠ 0: TIG (CDH) at CSI + (180°) (R1)

PRETHRU

CREW-MAN	PNL	PROCEDURES	REMARKS
		4.7.4.1 CSM Coelliptic Sequence Initiation Targeting Program (P72) (cont)	
		7. FL V06 N75 R1 Δalt (CDH) XXXX.Xnm R2 ΔT (CSI/CDH) XXBXX min-sec R3 ΔT (CDH/TPI) XXBXX min-sec Record values Key PRO	Times shown in R2 and R3 are modulo 60 minutes, i.e., remainder in minutes and seconds after dividing time in seconds by 3600 (60 times 60) seconds. TIG (CDH) is available, key V06 N13E.
		8. FL V06 N81 - CSI ΔV(LV) R1 X XXXX.X fps R2 Y XXXX.X fps R3 Z XXXX.X fps Accept: Record values Key PRO Reject: Key V25E - Load desired data	New value of ΔVY, based on use of R36 (V90), may be substituted to obtain out-of-plane corrections. (Ref para 4.7.2.1). However, R36 calculations are based on LM being active.
		9. FL V06 N82 - CDH ΔV(LV) R1 X XXXX.X fps R2 Y XXXX.X fps R3 Z XXXX.X fps Record values Key PRO	If ΔV(LV) for CSI has been modified by crew, modification will not be reflected in LGC-computed values for CDH ΔV(LV). Unlike ΔV(LV) for CSI, these values cannot be written over.
		10. FL V16 N45 R1 M XXXXX R2 TFI XXBXX min-sec R3 MGA 0000X R3 will display: a. -00001 if this is not last pass through program b. -00002 if this is last pass Options: a. If this was not last pass through program: (1) To terminate mark process & accomplish final pass - Key PRO - Return to step 6 (2) To continue mark process - Key V32E - Recycle to step 6 b. If this was last pass through program: Set EVNT TMR ind to TFI.	R1 display of M will be 00000 if RR data are not taken. Ref para 4.13.6.

CREW-MAN	PNL	PROCEDURES	REMARKS
		4.7.4.1 CSM Coelliptic Sequence Initiation Targeting Program (P72) (cont)	
		11. Transmit maneuver parameters CSI ΔV(LV) (N81) to CSM Key PRO	
		12. FL V37 N-- Key XXE - Exit P72	
		4.7.4.2 CSM Constant Δ Altitude Targeting Program (P73)	Purpose of CSM Constant Δ Altitude Targeting procedure is to calculate parameters, based on maneuver data approved and keyed into LGC for CDH; to display dependent variables for CDH maneuver to, and receive approval from astronaut/MSFN; and to store and transmit CDH target parameters for use by desired CSM thrusting procedure.
		LGC Power-Up (required)	Ref para 4.6.1.1.
		LGC Self-Test (desired)	Ref para 4.6.1.13.
		LGC time valid (required)	LGC/CMC Clock Synchronization Routine (R33) (para 4.6.1.15)
		LGC state vector valid (required)	LGC Update Program (P27) (para 4.6.1.7) and, when possible, LM Rendezvous Navigation Program (P20) (para 4.8.2.1). If P20 is operating, radar sighting marks are made automatically about once per minute. Number of marks (M) is displayed in R1 with N45.
		CSM Coelliptic Sequence Initiation Targeting Program (P72) (required)	Ref para 4.7.4.1.
		1. Key V37E 73E	
		2. FL V06 N13 - TIG (CDH) R1 00XXX hr R2 000XX min R3 0XX.XX sec Accept: Record data Key PRO - Go to step 6 Reject: Key V25E - Load desired data	

PRE THRU

CREW-MAN	PNL	PROCEDURES	REMARKS
		4.7.4.2 CSM Constant Δ Altitude Targeting Program (P73) (cont)	
		3. Poss FL V05 N09 - Alarm 00611 - No solution for given CDH parameters PROG lt - on Key RSET Options: a. Key V32E - Recycle to step 2, readjust TIG(CDH) b. Key PRO - Proceed with inaccurate data c. Key V34E - Terminate FL V37 N-- Key XXE	
		4. FL V06 N75 R1 Δalt (CDH) XXXX.X nm R2 ΔT (CDH/TPI) XXBXX min-sec R3 ΔT (TPI/nomTPI) XXBXX min-sec Record values Key PRO	
		5. FL V06 N81 - CDH ΔV(LV) R1 X XXXX.X fps R2 Y XXXX.X fps R3 Z XXXX.X fps Accept: Record values Key PRO Reject: Key V25E - Load desired ΔV(LV)	Negative value indicates retrograde attitude, Z-axis up (for X-axis thrust). New ΔVY value, based on use of R36 (V90), may be used to obtain out-of-plane corrections. (Ref para 4.7.2.1.) However, R36 calculations are based on LM being active.
		6. FL V16 N45 R1 M XXXXX R2 TFI XXBXX min-sec R3 MGA 0000X R3 will display: a. -00001 if this is not last pass through program b. -00002 if this is last pass Options: a. If this was not last pass through program: (1) To terminate mark process & accomplish final pass- Key PRO, and go to step 3	R1 display of M will be 00000 if RR data are not taken.

LM 3231

CREW-MAN	PNL	PROCEDURES	REMARKS
		4.7.4.2 CSM Constant Δ Altitude Targeting Program (P73) (cont)	
		(2) To continue mark process: Key V32E - Recycle to step 3 b. If this was last pass through program: Set EVNT TMR ind to TFI (in R2).	Ref para 4.13.6.
		7. Transmit maneuver parameters CDH ΔV (N81) to CSM: Key PRO	
		8. FL V37 N-- Key XXE - Exit P73	
		4.7.4.3 CSM Transfer Phase Initiation Targeting Program (P74)	Purpose of CSM Transfer Phase Initiation Targeting Program is to calculate and transmit required ΔV and other initial conditions required by CMC for CSM execution of TPI maneuver given: a. Time of ignition, TIG (TPI), or elevation angle (E) of CSM/LM LOS at TIG (TPI) b. Central angle of transfer of passive vehicle (LM) from TIG (TPI) to time of intercept. TPI also calculates TIG (TPI) given E, or E given TIG (TPI). TPI procedure may be performed concurrently with P20. If P20 is operating, radar marks are made automatically, approximately once per minute, when enabled by track and update flags.
		LGC Power-Up (required)	Ref para 4.6.1.1.
		LGC Self-Test (desired)	Ref para 4.6.1.13.
		LGC time valid (required)	LGC/CMC Clock Synchronization Routine (R33) (para 4.6.1.15)
		LGC state vector valid (required)	LGC Update Program (P27) (para 4.6.1.7) and when possible LM Rendezvous Navigation Program (P20) (para 4.8.2.1) If P20 is operating, radar marks are made automatically about once per minute. Number of marks (M) is displayed in R1 with N45.

PRETHR

CREW-MAN	PNL	PROCEDURES	REMARKS
		4.7.4.3 CSM Transfer Phase Initiation Targeting Program (P74) (cont)	
		1. Key V37E 74E	
		2. FL V06 N37 - TIG (TPI) R1 00XXX hr R2 000XX min R3 0XX.XX sec Accept: Key PRO Reject: Key V25E - Load desired TIG (TPI)	P74 requires initial value of TIG (TPI) to be within 30 minutes of actual TPI time.
		3. FL V06 N55 R1 N XXXXX R2 E XXX.XX° R3 CENTANG XXX.XX°	N is defined as follows: N = 0 (initial display is +00000) - specifies Kepler conic integration with no target offset (faster than precision integration) N ≠ 0 - specifies precision integration with N target offsets (useful in earth orbit) E is elevation angle between CSM/LM LOS and CSM local horizontal at TIG (TPI) referenced to direction of flight. Initial display is -000.00°. Zero value in R2 requests that E be calculated based on previous display of TIG (TPI); nonzero value of E, that TIG (TPI) be calculated based on E. CENTANG is orbital central angle of passive vehicle during transfer from TIG (TPI) to time of intercept.
		Alternatives: a. To accept present values of N, E, and CENTANG - Record values Key PRO - Go to step 9 b. To reject present values of N, E, or CENTANG Key V25E Load N, E, and CENTANG as desired Key PRO - Go to step 9 c. If program is to be terminated: Key V34E FL V37 N-- Key XXE, exit P74	
		4. Poss FL V05 N09 - Alarm 00611 - No TIG for given E PROG lt - on Key RSET & PRO - Go to step 2	

CREW-MAN	PNL	PROCEDURES	REMARKS
		4.7.4.3 CSM Transfer Phase Initiation Targeting Program (P74) (cont)	
		5. FL V06 N37 - TIG (TPI) R1 00XXX hr R2 000XX min R3 0XX.XX sec Record TIG (TPI). Key PRO - Go to step 7	
		6. FL V06 N55 R1 N XXXXX R2 E XXX.XX° R3 CENTANG XXX.XX° Record data Key PRO	
		7. FL V06 N58 R1 Hp XXXX. R2 ΔV(TPI) XXXX.X fps R3 ΔV(TPF) XXXX.X fps Record data. Key PRO	To verify central angle of active vehicle is not within 170° to 190°: Key V06 N52E R1 XXX.XX° ACTCENT (active vehicle central angle) R2 ------- R3 ------- Key KEY REL If within 170° to 190°, reenter program & adjust input. Hp is altitude of perifocus above launch pad radius in earth orbit; above lunar radius at most recently defined landing site, in lunar orbit. ΔV(TPF) is required impulsive ΔV to accomplish intercept maneuver (TPF) at calculated time of intercept.
		8. FL V06 N81 - ΔV(LV) R1 X XXXX.X fps R2 Y XXXX.X fps R3 Z XXXX.X fps Accept: Record data Key PRO Reject: Key V25E - Load desired ΔV(LV)	New ΔVY value, based on use of R36 (V90), may be used to obtain out-of-plane corrections. (Ref para 4.7.2.1) However, R36 calculations are based on LM being active. If desired: V06 N59E R1 ΔV (LOS 1) XXXX.X fps R2 ΔV (LOS 2) XXXX.X fps R3 ΔV (LOS 3) XXXX.X fps Record data. Key KEY REL

PRETHR

CREW-MAN	PNL	PROCEDURES	REMARKS
		4.7.4.3 CSM Transfer Phase Initiation Targeting Program (P74) (cont)	ΔV (LOS) are components of required impulsive ΔV in orthogonal coordinate system oriented along CSM-to-LM LOS. LOS 1 is component along unit I LOS 2 is component along unit (HxI)xI LOS 3 is component along unit (HxI) Where, I = unit vector along LOS to LM H = unit vector along CSM orbital momentum vector

CREW-MAN	PNL	PROCEDURES	REMARKS
		4.7.4.3 CSM Transfer Phase Initiation Targeting Program (P74) (cont)	
		9. FL V16 N45 R1 M XXXXX R2 TFI XXBXX R3 MGA -0000X	M is number of marks made since last thrust maneuver or P20 initiation. TFI is time from TIG (TPI). Sign is - before, + after, TIG (TPI). Maximum reading is 59559. MGA is not pertinent to this program. R3 will display: -00001 if this is not last pass through program -00002 if this is last pass
		Alternatives: a. Continue marks: Key V32E, (recycle), go to: (1) Step 6 if LGC is to calculate E or (2) Step 4 if LGC is not to calculate E b. Terminate marks: Key PRO (1) If not final pass, go to: (a) Step 6 if LGC is to calculate E or (b) Step 4 if LGC is not to calculate E (2) If this was last pass FL V37 N-- Key XXE, exit P74 Transmit maneuver parameters TPI ΔV (LV) (N81) to CSM. c. Terminate program: Key V34E FL V37 N-- Key XXE, exit P74	
		4.7.4.4 CSM Transfer Phase Midcourse Targeting Program (P75)	
			Purpose of CSM Transfer Phase Midcourse Targeting Program is to calculate and transmit required ΔV and other initial conditions for TPM maneuver during CSM active rendezvous.
		LGC Power-Up (required)	Ref para 4.6.1.1.
		LGC Self-Test (desired)	Ref para 4.6.1.13.

CREW-MAN	PNL	PROCEDURES	REMARKS
		4.7.4.4 CSM Transfer Phase Midcourse Targeting Program (P75) (cont)	
		LGC time valid (required)	LGC/CMC Clock Synchronization Routine (R33) (para 4.6.1.15)
		LGC state vector valid (required)	LGC Update Program (P27) (para 4.6.1.7) and LM Rendezvous Navigation Program (P20) (para 4.8.2.1)
		Time of intercept stored in LGC by CSM TPI Program (P74).	Ref para 4.7.4.3.
		1. Key V37E 75E Go to step 3.	
		2. FL V06 N81 - ΔV(LV) R1 X XXXX.X fps R2 Y XXXX.X fps R3 Z XXXX.X fps Accept: Record data. Key PRO Reject Key V25E - Load desired ΔV(LV)	Rendezvous Out-of-Plane Display Routine (R36) may be used to define out-of-plane velocity corrections to be achieved by altering ΔVY. However, R36 calculations are based on LM being active. If desired: V06 N59E R1 ΔV (LOS 1) XXXX.X fps R2 ΔV (LOS 2) XXXX.X fps R3 ΔV (LOS 3) XXXX.X fps Record data. Key KEY REL To verify central angle of active vehicle is not within 170° to 190°: Key V06 N52E R1 XXX.XX° ACTCENT (active vehicle central angle) R2-------- R3-------- Key KEY REL If within 170° to 190°, wait as necessary. Key KEY REL ΔV (LOS) are components of required impulsive ΔV in orthogonal coordinate system oriented along LM-to-CSM LOS. LOS 1 is component along unit I LOS 2 is component along unit (HxI)xI LOS 3 is component along unit (HxI) Where, I = unit vector along LOS to LM H = unit vector along CSM orbital momentum vector

PRETHRUS

CREW-MAN	PNL	PROCEDURES	REMARKS
		4.7.4.4 CSM Transfer Phase Midcourse Targeting Program (P75) (cont)	
		3. FL V16 N45 R1 M XXXX R2 TFI XXBXX min-sec R3 MGA 0000X a. Continue marks - Key V32E - Go to step 2 b. To terminate mark & do final pass - Key PRO - Go to step 2 (If final pass go to step 4)	R3 will display: -00001 if this is not last pass -00002 if this is last pass If midcourse correction is not required (ΔV less than TBD) continue marks.
		4. FL V37 N-- Key XXE - Exit P75 Transmit maneuver parameters TPM ΔV (LV) (N81) to CSM.	

PARA	TITLE	PAGE
4.8	Navigation	4.8-2
4.8.1	Orbital Navigation	4.8-2
4.8.1.1	Ground Track Determination Program (P21)	4.8-2
4.8.1.2	Orbit Parameter Display (PGNCS R30 & AGS)	4.8-3
4.8.2	LM Rendezvous Navigation	4.8-6
4.8.2.1	LM Rendezvous Navigation Program (P20)	4.8-6
4.8.2.2	AGS Manual Rendezvous Radar LM State Vector Update	4.8-19
4.8.2.3	AGS Automatic Rendezvous Radar LM State Vector Update (Raw Data Transfer Via LGC)	4.8-22
4.8.3	Lunar Surface Navigation	4.8-22B
4.8.3.1	Lunar Surface Navigation Program (P22)	4.8-22B

CREW-MAN	PNL	PROCEDURES	REMARKS
		4.8 NAVIGATION	
		4.8.1 ORBITAL NAVIGATION	
		4.8.1.1 Ground Track Determination Program (P21)	Purpose of Ground Track Determination Program (P21) is to compute ground track parameters associated with LM or CSM, based on time loaded in step 3.
		LGC Power-Up (required)	Ref para 4.6.1.1.
		1. Key V37E 21E	
		2. FL V04 N06 - Option R1 00002 - Specify vehicle R2 00001 (LM) R3 —— X = 1 - LM = 2 - CSM Accept: Key PRO Reject: Key V22E - 2E (CSM)	LGC will assume CSM for all options other than 00001, 00000, or 77776.
		3. FL V06 N34 - T (Event) R1 00XXX hr R2 000XX min R3 0XX.XX sec Accept: Key PRO Reject: Key V25E - Load desired time or all zeros for present time	T (Event) is time (GET) at which latitude and longitude of vehicle position are desired. Display registers R1, R2, and R3 will initially read 00000.
		4. FL V06 N43 R1 Latitude (+North) XXX.XX° R2 Longitude (+East) XXX.XX° R3 Altitude XXXX.X nm a. Recycle: Key V32E, go to step 3 or b. Terminate program: Key PRO	Additional parameters may be called as follows: Key V06 N91E R1 Altitude XXXXX (10 nm) R2 V XXXXX fps R3 Flight path angle XXX.XX° To terminate N91: Key KEY REL Altitude for earth orbit is above launch pad radius; for lunar orbit, above landing site radius. T (Event) is incremented by 10 minutes.
		5. FL V37 N-- Key XXE	Select desired program.

LM 3231

CREW-MAN	PNL	PROCEDURES		REMARKS
		4.8.1.2 Orbit Parameter Display (PGNCS R30 & AGS)		Purpose of Orbit Parameter Display (PGNCS R30 & AGS) procedure is to provide astronaut with orbital parameters, computed by LGC and AEA, to supplement orbital information provided by ground. To monitor progress of state vector integration, time associated with advancing (retrogressing) state is available by keying V16 N38E: Key V16 N38E - State vector integration time (TET) R1 00XXX hr R2 000XX min R3 0XX.XX sec TET is time (GET) to which state vector integration process has presently calculated state vector. To release N38: Key KEY REL
		LGC Power-Up (required) LGC Self-Test (desired) LGC time valid (required) LGC state vector valid (required)		Ref para 4.6.1.1. Ref para 4.6.1.13. LGC/CMC Clock Synchronization Routine (R33) (para 4.6.1.15) LGC Update Program (P27) (para 4.6.1.7)
			AGS Power-Up (required) AEA Self-Test (desired) AGS time valid (required)	Ref para 4.6.2.1. Ref para 4.6.2.3. AGS Manual Absolute Time Initialization procedure (para 4.6.2.6) or AGS Initialization Routine (R47) (para 4.6.1.18)
			AGS LM state vector valid (required)	AGS Initialization Routine (R47) (para 4.6.1.18) or AGS Manual LM State Vector Update/Initialization procedure (para 4.6.2.7) or AGS Manual Rendezvous Radar LM State Vector Update procedure (para 4.8.2.2)

CREW-MAN	PNL	PROCEDURES		REMARKS
		4.8.1.2 Orbit Parameter Display (PGNCS R30 & AGS) (cont)		
			AGS CSM state vector valid (required)	AGS Initialization Routine (R47) (para 4.6.1.18) or AGS Manual CSM State Vector Update/Initialization procedure (para 4.6.2.9)
		1. Key V82E Poss OPR ERR lt - on Exit R30, key RSET		OPR ERR lt - on if another extended verb from R76 is active.
		Poss FL V04 N12 - Option code R1 00002 - Specify vehicle R2 0000X - Assumed option (LM) R3 ----- X = 1 - LM = 2 - CSM Accept: Key PRO Reject: Key V22E - 2E (CSM)		If average-g integration is in process (powered flight), option code will not be called.
		2. FL V16 N44 - Orbit parameters R1 Ha XXXX.X nm R2 Hp XXXX.X nm R3 TFF XXBXX min-sec		Orbit parameters are automatically updated every 2 seconds while average-g integration is in process. For lunar orbit, if Hp >35,000 feet, TFF = -59B59 (or earth orbit, if Hp >300,000 feet). TFF is time of free fall to 35,000 feet for lunar orbit (or to 300,000 feet for earth orbit). TFF counts down if average-g integration is not in process. Maximum altitude display value is 9999.9 nm
		To repeat orbit-parameter calculations if average-g integration is not in process: Key V32E If TFF = -59B59 & display of time to perifocus is desired, go to step 3; otherwise: Key PRO, exit R30		
			1. Read out apofocus altitude: Key DEDA C 315R (0.1 nm) Compare with N44 Ha.	
			2. Read out perifocus altitude: Key DEDA C 403R (0.1 nm) Compare with N44 Hp.	

CREW-MAN	PNL	PROCEDURES	REMARKS
		4.8.1.2 Orbit Parameter Display (PGNCS R30 & AGS) (cont) 3. Key N32E - Time from perifocus R1 00XXX hr R2 000XX min R3 0XX.XX sec When finished with display: Key KEY REL, PRO, exit R30	

LM 3231

CREW-MAN	PNL	PROCEDURES	REMARKS
		4.8.2 LM RENDEZVOUS NAVIGATION	
		4.8.2.1 LM Rendezvous Navigation Program (P20)	Purpose of LM Rendezvous Navigation Program (P20) is to acquire and track CSM transponder by positioning RR antenna and/or LM +Z-axis along LOS to CSM, and to update LM or CSM state vectors from tracking data. Program may be used to point LM tracking light at CSM. Three state vector update options exist: 1. LM state vector update (V80E) 2. CSM state vector update (V81E) 3. No state vector update (V95E) If P20 is selected before landing phase of lunar landing mission, operation must be in no-update mode. When this program has been completed, it will continue to operate automatically and simultaneously with another program until terminated by crew selection of LGC Idling Program (P00), V56E or V34E in response to flashing P20 display. Keying in V34E in response to P20 display when LM Prethrust Program (P3X) is operating in foreground will not terminate prethrust program. If V56E or V34E (terminate P20) is keyed in during P32, P33, P34, or P35 computations (except on a noun 49 display), these computations will be restarted from the beginning. Hardware restart removes track enable and forces P20 to beginning of RR Designate Routine (R21), which calls Preferred Tracking Attitude Routine (R61).
		LGC Power-Up (required)	Ref para 4.6.1.1.
		IMU Power-Up (LGC Operating) (required)	Ref para 4.6.1.3. ISS should be on 15 minutes before thrusting maneuver.
		LGC Self-Test (desired)	Ref para 4.6.1.13.
		IMU Orientation Determination (required)	Ref para 4.9.1.1.
		AGS Power-Up (desired)	Ref para 4.6.2.1.
		AGS Checkout (desired)	Ref para 4.6.2.4.

RC 1593

CREW-MAN	PNL	PROCEDURES	REMARKS
		4.8.2.1 LM Rendezvous Navigation Program (P20) (cont)	
		LGC time valid (desired)	LGC/CMC Clock Synchronization Routine (R33) (para 4.6.1.15) AGS required to perform AGS acquisition steering as backup to Preferred Tracking Attitude Routine.
		LGC state vector valid (required)	LGC Update Program (P27) (para 4.6.1.7)
		Rendezvous Radar Initial Activation & Checkout (required)	Ref para 4.6.3.2. Rendezvous radar heaters must be turned on 2.5 hours before use.
		CSM RR Transponder Activation (required)	
		CSM maintaining preferred tracking attitude (required)	
		1. Verify/set controls as follows:	
	1	RATE/ERR MON sw - RNDZ RADAR	During attitude maneuvers, crew may desire to switch to LDG RDR/CMPTR for display of attitude errors.
		ATTITUDE MON sw - PGNS GUID CONT sw - PGNS RNG/ALT MON sw - RNG/RNG RT	
	3	RADAR TEST sw - OFF RNDZ RADAR sel - SLEW (if choice of LGC auto or manual acquisition is desired)	RNG/ALT ind pwr/sig fail lt may flash randomly at range rates below 10 fps when displaying rendezvous radar data. This is inherent in detection logic of indicator and does not indicate malfunction. Data are good and random flashing light should be disregarded. Crew will not be given option to acquire target manually if RNDZ RADAR sel - LGC.
		RNDZ RADAR sel - LGC (if auto acquisition is desired) S/C: ROLL, PITCH, & YAW sw - MODE CONT PGNS sw - ATT HOLD	Allow 10 seconds between RNDZ RADAR sel-LGC and step 2 (Key V37E20E) to help avoid a software restart during LGC RR CDU zero. A restart (Hardware or software) during LGC "RR turn on" sequence can cause later erratic designate behavior. Recovery: RNDZ RADAR sel-LGC-to-SLEW-to-LGC.
		2. Key V37E 20E Poss PROG lt - on Key V05 N09E - Call alarm 00210 - IMU not on 00220 - Bad REFSMMAT (ISS orientation not known)	Perform IMU Power-Up (LGC Operating) procedure (para 4.6.1.3). Perform IMU Orientation Determination Program (P51) (para 4.9.1.1).

NAV

RC 1595, LM 3199, LM 3231

CREW-MAN	PNL	PROCEDURES	REMARKS
		4.8.2.1 <u>LM Rendezvous Navigation Program (P20) (cont)</u>	
		Key KEY REL & RSET FL V37 N-- Perform change of program Key XXE Exit P20	Reselect P20. Go to program selected.
		2A. Poss PROG lt - on Key V05 N09E - Call alarm 00526 - Range >400 nm RNDZ RADAR: NO TRACK lt - on Key RSET Alternatives to alarm: a. Wait until range <400 nm - Key V32E, go to step 3 or b. Key V56E perform Terminate Tracking Routine (R56) - Terminate P20, exit to other program in process or P00	To obtain optional display of range & range rate: Key V16 N54E R1 range XXX.XX nm (999.99 will be displayed R2 range rate XXXX.X fps for values ≥ 999.99 nm) R3 00000 If no other program is in process, R00 is automatically entered.
		3. To change state vector to be updated: a. Key V81E - Update CSM state vector or b. Key V95E - No state vector update	At beginning of program, LGC automatically sets state vector to be updated to LM, but does not override previous V95E. Option may be changed at any time later by DSKY entry.
		4. Attitude Maneuver Routine (R61/R60) If pointing error <15°, maneuver will occur without displays. Go to step 11 if RNDZ RADAR sel - LGC; otherwise, go to step 6. PRIO DISP lt - on *FL V50 N18 - Perform desired automatic maneuver to final FDAI angles R1 Roll XXX.XX° R2 Pitch XXX.XX° R3 Yaw XXX.XX°	Automatic attitude maneuvers are more efficient (i.e., propellant-time product is lower) than manual attitude maneuvers. If final computed FDAI angles result in ±90° yaw, transformation from IMU to FDAI angles in roll and pitch is indeterminate and R1 and R2 will be zero. Asterisk (*) indicates priority display. Two-second delay is required before LGC will accept crew response.

LM 3158, LM 3199, LM 3231

CREW-MAN	PNL	PROCEDURES	REMARKS
		4.8.2.1 LM Rendezvous Navigation Program (P20) (cont)	
		To reject attitude maneuver: When within DAP deadband limits, & further adjustment about desired vector is not desired - Key ENTR, exit R60 - Go to step 12 if RNDZ RADAR sel - LGC, otherwise, go to step 6 PRIO DISP lt - off	
		To perform attitude maneuver:	
		a. To adjust vehicle attitude & have LGC recompute gimbal angles: Select desired attitude control mode -	Adjustment is not possible in all cases, including roll attitude adjustment. Ref para 4.5.1.
	ACA	ACA - maneuver as desired	
	3	S/C: PGNS sw - ATT HOLD Key PRO PRIO DISP lt - off Return to beginning of step 4.	If GUID CONT sw - PGNS and S/C: PGNS sw - AUTO, LGC commands automatic attitude maneuver.
		b. To perform attitude maneuver manually: Select desired attitude control mode -	Ref para 4.5.1.
	ACA	ACA - maneuver manually to required attitude Key PRO PRIO DISP lt - off Return to beginning of step 4.	
		c. To perform attitude maneuver automatically:	Automatic trim maneuver is to be considered essential for maneuvering to thrusting attitudes.
	1	GUID CONT sw - PGNS	
	3	S/C: PGNS sw - AUTO Key PRO PRIO DISP lt - off Go to step 5.	
		5. If PGNCS automatic attitude maneuver selected: DSKY displays are blanked until completion of automatic maneuver. Monitor FDAI belly band, with respect to color band on roll bezel, to avoid gimbal lock.	If desired, Key extended verbs or Key V16 N18 - Final FDAI angles R1 Roll XXX.XX° R2 Pitch XXX.XX° R3 Yaw XXX.XX° Key KEY REL

CREW-MAN	PNL	PROCEDURES	REMARKS
		4.8.2.1 LM Rendezvous Navigation Program (P20) (cont)	
		Monitor return of preceding display, indicating automatic maneuver is complete. To stop LM motion if gimbal lock is approached:	Belly band covers separation between hemispheres of FDAI ball. Belly band, in color bands on each side of FDAI roll bezel, would indicate IMU middle gimbal angle $\geq 75°$. During this maneuver, LGC will terminate automatic maneuver if S/C: PGNS sw is switched out of AUTO.
	ACA	S/C: PGNS sw - ATT HOLD If manual override & completion of maneuver is desired: Select desired attitude control mode - ACA - maneuver manually	Ref para 4.5.1.
		Return to step 4.	
		6. *Poss FL V05 N09 - Alarm (only if another program is in process) PRIO DISP lt - on 00514 - RR goes out of automatic mode while in use PROG lt - on Alarm alternatives: a. RNDZ RADAR sel - LGC Key RSET & PRO or V32E, go to step 11 PRIO DISP lt - off or b. Key RSET & V56E or V34E, exit P20 PRIO DISP lt - off	Asterisk (*) indicates priority display. Two-second delay is required before LGC will accept crew response.

NAV

CREW-MAN	PNL	PROCEDURES	REMARKS
		4.8.2.1 LM Rendezvous Navigation Program (P20) (cont)	
		7. Poss FL V50 N25 - Checklist reference (only if P20 is running alone) R1 00201 - Perform RR automatic mode R2 ----- R3 ----- Accept: RNDZ RADAR sel - LGC Key PRO - Go to step 11 (R21) Reject: Key ENTR - Perform R23, steps 8 through 10	This display is called only when RNDZ RADAR sel is not set to LGC. Manual acquisition can be called from this display only by keying ENTR. LGC selects minimum deadband at this time.
	3		
		8. RR Manual Acquisition Routine (R23) FL V50 N25 - Checklist reference R1 00205 - Perform manual acquisition of CSM R2 ----- R3 ----- Verify RATE/ERR MON sw - RNDZ RADAR RNDZ RADAR: SLEW RATE sw - LO RADAR: TEST/MON sel - AGC Verify RR antenna is in mode No. 1. If shaft & trunnion angles are zero & stay at zero when RNDZ RADAR: SLEW sw - LEFT, hold sw until trunnion deflects right & returns to zero. Perform square search pattern for CSM: RNDZ RADAR: SLEW sw - RIGHT 2.5°, stop SLEW sw - UP 2.5°, stop SLEW sw - LEFT 5°, stop SLEW sw - DOWN 5°, stop SLEW sw - RIGHT 5°, stop Continue square search pattern to max increase of 10° until AGC signal increases on RADAR: SIGNAL STRENGTH ind.	RR Manual Acquisition Routine (R23) may only be selected if P20 is not running in conjunction with another program. When RNDZ RADAR sel - SLEW, RR range tracker is inhibited. RR range data are not usable. Hold at each stop 5 seconds. If electromagnetic interference in system is identified as caused by tracking light (regular pulses on audio channel or indicated on SIGNAL STRENGTH ind at approximate frequency of 1 pps), tracking light may be turned off until transmission or reception is complete.
	1 3		
	3	RNDZ RADAR: SLEW sw - LEFT & RIGHT for AGC peak on RADAR: SIGNAL STRENGTH ind RNDZ RADAR: SLEW sw - UP & DOWN for AGC peak on RADAR: SIGNAL STRENGTH ind	

CREW-MAN	PNL	PROCEDURES	REMARKS
		4.8.2.1 LM Rendezvous Navigation Program (P20) (cont)	
		Perform Rendezvous Radar Manual Side-Lobe Acquisition Check & Main-Lobe Acquisition Verification.	Ref para 4.6.3.5.
		a. When CSM acquisition achieved: RNDZ RADAR sel - LGC Verify RDNZ RADAR: NO TRACK lt - off after 15 seconds	Up to 15 seconds may elapse before range tracker locks on and data-good discrete is issued.
		Key PRO - Exit R23 Go to step 17 (R22) unless: *Poss FL V05 N09 - Alarm 00501 - RR antenna out of limits PROG lt - on RNDZ RADAR: NO TRACK lt - on Key RSET Alternatives to alarm: 1. Maneuver again to preferred tracking attitude - Key V32E, go to step 9 (R61) or 2. Key V34E or V56E - Terminate R23 & P20 FL V37 N -- - Perform change of program Key XXE - Exit R23 & P20	Asterisk (*) indicates priority display. Two-second delay is required before LGC will accept crew response. Go to program selected.
		b. If CSM acquisition is not obtained or is by side lobe: Key ENTR - Perform preferred tracking attitude routine (R61), steps 9 and 10.	
		c. If unable to acquire CSM manually: Perform Rendezvous Radar Checkout. Request CSM perform transponder test. Key V34E - Terminate P20 & R23 FL V37 N-- - Perform change of program Key XXE - Exit P20 & R23	Ref para 4.6.3.2.
		9. Attitude Maneuver Routine (R61/R60) If pointing error <15°, maneuver will occur without displays. Return to step 8. PRIO DISP lt - on *FL V50 N18 - Perform desired automatic maneuver to final FDAI angles R1 Roll XXX.XX° R2 Pitch XXX.XX° R3 Yaw XXX.XX°	Automatic attitude maneuvers are more efficient (i.e., propellant-time product is lower) than manual attitude maneuvers. If final computed FDAI angles result in ±90° yaw, transformation from IMU to FDAI angles in roll and pitch is indeterminate and R1 and R2 will be zero.

CREW-MAN	PNL	PROCEDURES	REMARKS
		4.8.2.1 LM Rendezvous Navigation Program (P20) (cont)	
		To reject attitude maneuver: When within DAP deadband limits & further adjustment about desired vector is not desired: Key ENTR, exit R60 - Return to step 8 PRIO DISP lt - off	
		To perform attitude maneuver: a. To adjust vehicle attitude & have LGC recompute gimbal angles: Select desired attitude control mode - ACA - maneuver as desired S/C: PGNS sw - ATT HOLD Key PRO PRIO DISP lt - off Return to beginning of step 9.	Adjustment is not possible in all cases, including roll attitude adjustment. Ref para 4.5.1. If GUID CONT sw - PGNS and S/C: PGNS sw - AUTO, LGC commands automatic attitude maneuver.
		b. To perform attitude maneuver manually: Select desired attitude control mode - ACA - maneuver manually to required attitude Key PRO PRIO DISP lt - off Return to beginning of step 9.	Ref para 4.5.1.
	1 3	c. To perform attitude maneuver automatically: GUID CONT sw - PGNS S/C: PGNS sw - AUTO Key PRO PRIO DISP lt - off Go to step 10	Automatic trim maneuver is to be considered essential for maneuvering to thrusting attitudes.
		10. If PGNCS automatic attitude maneuver selected: DSKY displays are blanked until completion of automatic maneuver. Monitor FDAI belly band, with respect to color band on roll bezel, to avoid gimbal lock.	If desired, Key extended verbs or Key V16 N18 - Final FDAI angles R1 Roll XXX.XX° R2 Pitch XXX.XX° R3 Yaw XXX.XX° Key KEY REL
		Monitor return of preceding display, indicating automatic maneuver is complete.	Belly band covers separation between hemispheres of FDAI ball. Belly band, in color bands on each side of FDAI roll bezel, would indicate IMU middle gimbal angle $\geq 75°$. During this maneuver, IGC will terminate automatic maneuver if S/C: PGNS sw is switch out of AUTO.

LM 3158, LM 3199, LM 3231

CREW-MAN	PNL	PROCEDURES	REMARKS
		4.8.2.1 LM Rendezvous Navigation Program (P20) (cont)	
		To stop LM motion if gimbal lock is approached; S/C: PGNS sw - ATT HOLD If manual override & completion of maneuver is desired: Select desired attitude control mode - ACA - maneuver manually	Ref para 4.5.1.
		Return to step 9.	
		11. RR automatic acquisition (RR Designate Routine R21) If acquisition is successful (no alarms), go to step 16.	Routine 21 points rendezvous radar at CSM until target is acquired or until alarm 00503 is generated. Designate process is automatic unless attitude maneuver is requested by LGC or program alarm occurs. When acquisition is accomplished in R21, crew confirmation of main-lobe lock on is requested (step 16). If acquisition is confirmed, RR Data Read Routine (R22), step 17, is performed; if not confirmed, P20 is terminated. Preferred Tracking Attitude Routine (R61) is called if LOS is not within antenna limits after reorienting LM, P20 automatically reselects R21, step 11.
		*Poss FL V50 N18 - Perform automatic maneuver PRIO DISP lt - on Return to steps 4 & 5.	
		*Poss FL V05 N09 - Alarm PRIO DISP lt - on 00503 - RR unable to acquire target RNDZ RADAR: NO TRACK lt - on Key RSET Alternatives to alarm: a. Key V32E - Recycle to start of R21, step 11 to redesignate RR PRIO DISP lt - off or b. Key PRO - Initiate RR Search Routine (R24), steps 12 through 15 PRIO DISP lt - off or c. Key V34E or V56E, perform Terminate Tracking Routine (R56) - Terminate R21 & P20 PRIO DISP lt - off Key R56	RR search process can be entered only from this alarm. Asterisk (*) indicates priority display. Two-second delay is required before LGC will accept crew response.

LM 3199, LM 3231

CREW-MAN	PNL	PROCEDURES	REMARKS
		4.8.2.1 LM Rendezvous Navigation Program (P20) (cont)	
		12. Rendezvous radar search acquisition - Perform RR Search Routine (R24)	Confirm, by voice, that CSM is in preferred attitude and that transponder is active.
		Poss PROG lt - on Key V05 N09E - Call alarm 00527 - Attitude maneuver required Key KEY REL	
		*FL V16 N80 PRIO DISP lt - on R1 XXXXX (initially 00000) R2 Ω XXX.XX° (initially 00000 until designation begins) R3 ----- If Ω does not approach 30°, go to step 15.	Ω = angle between RR boresight and LM +Z axis R1 displays 11111 after search is successfully completed.
		If Ω exceeds 30° any time during R24 - To continue: Key V32E, Preferred Tracking Attitude Routine (R61), steps 13 & 14. PRIO DISP lt - off To terminate: Key V34E or V56E, perform Terminate Tracking Routine (R56) - exit R24 & P20 PRIO DISP lt - off	

CREW-MAN	PNL	PROCEDURES	REMARKS
		4.8.2.1 LM Rendezvous Navigation Program (P20) (cont)	
		13. Attitude Maneuver Routine (R61/R60) If pointing error <15°, maneuver will occur without displays. Return to step 12. PRIO DISP lt - on *FL V50 N18 - Perform desired automatic maneuver to final FDAI angles R1 Roll XXX.XX° R2 Pitch XXX.XX° R3 Yaw XXX.XX°	Automatic attitude maneuvers are more effective (i.e., propellant-time product is lower) than manual attitude maneuvers. If final computed FDAI angles result in ±90° yaw, transformation from IMU to FDAI angles in roll and pitch is indeterminate and R1 and R2 will be zero.
		To reject attitude maneuver: When within DAP deadband limits & further adjustment about desired vector is not desired: Key ENTR, exit R60 - Return to step 12 PRIO DISP lt - off	
		To perform attitude maneuver:	
	3	a. To adjust vehicle attitude & have LGC recompute gimbal angles: Select desired attitude control mode - ACA - maneuver as desired S/C: PGNS sw - ATT HOLD Key PRO PRIO DISP lt - off Return to beginning of step 13.	Adjustment is not possible in all cases, including roll attitude adjustment. Ref para 4.5.1. If GUID CONT sw - PGNS and S/C: PGNS sw - AUTO, LGC commands automatic attitude maneuver.
	ACA	b. To perform attitude maneuver manually: Select desired attitude control mode - ACA - maneuver manually to required attitude Key PRO PRIO DISP lt - off Return to beginning of step 13.	Ref para 4.5.1.
		c. To perform attitude maneuver automatically: GUID CONT sw - PGNS S/C: PGNS sw - AUTO Key PRO Go to step 14.	Automatic trim maneuver is to be considered essential for maneuvering to thrusting attitudes.

RC 1593, LM 3158, LM 3199, LM 3231

CREW-MAN	PNL	PROCEDURES	REMARKS
		4.8.2.1 LM Rendezvous Navigation Program (P20) (cont)	
		14. If PGNCS Automatic selected: Pre-R60 displays return until completion of automatic maneuver. Monitor FDAI belly band, with respect to color band on roll bezel, to avoid gimbal lock.	If desired, Key extended verbs or Key V16 N18 - Final FDAI angles R1 Roll XXX.XX° R2 Pitch XXX.XX° R3 Yaw XXX.XX° Key KEY REL Belly band covers separation between hemispheres of FDAI ball. Belly band, in color bands on each side of FDAI roll bezel, would indicate IMU middle gimbal angle ≥75°.
		Monitor return of preceding display, indicating automatic maneuver is complete. To stop LM motion if gimbal lock is approached; S/C: PGNS sw - ATT HOLD If manual override & completion of maneuver is desired: Select desired attitude control mode -	During this maneuver, LGC will terminate automatic maneuver if S/C: PGNS sw is switched out of AUTO.
	ACA	ACA - maneuver manually Return to step 13.	Ref para 4.5.1.
		15. Permit RR to search until V16 N80, R1 displays 11111. When search is successfully completed, verify CSM acquisition is not by side lobe: Key PRO - Return to step 2A If CSM acquisition is by side lobe, manually reacquire CSM in main lobe:	R1 displays 11111 if RR search has been successful. Ref para 4.6.3.5.
	3	RNDZ RADAR sel - LGC RNDZ RADAR: NO TRACK lt - off Key PRO - Return to step 2A If CSM is not acquired: Key V34E or V56E - Terminate R24 & P20, reselect P20, &, at step 7 select R23	Key PRO only on display of 11111 is R1 of N80 (indicating lockon achieved), a PRO on 00000 results in an infinite RR designate loop. Recovery: Reselect P20 and redo R24.
		PRIO DISP lt - on 16. *FL V50 N72 R1 Trunnion XXX.XX° R2 Shaft XXX.XX° R3 ----- If main-lobe lock-on has been achieved: Key PRO PRIO DISP lt - off	Large RR shaft and trunnion angles, or COAS LOS not optically on target, indicate side-lobe lock on has been achieved. Asterisk (*) indicates priority display. Two-second time delay is required before LGC will accept crew response.

CREW-MAN	PNL	PROCEDURES	REMARKS
		4.8.2.1 LM Rendezvous Navigation Program (P20) (cont)	
		If main-lobe lock-on was not achieved and is desired, manually reacquire CSM in main-lobe: RNDZ RADAR sel - LGC RNDZ RADAR: NO TRACK lt - off Key PRO PRIO DISP lt - off	
		If main-lobe lock-on was not achieved and is not desired: Key V34E or V56E - Perform Terminate Tracking Routine (R56) - Exit P20 PRIO DISP lt - off	
		17. RR Data Read Routine (R22)	RR Data Read Routine (R22) processes RR mark data to update LM or CSM or neither state vector, as defined in step 3. Process is automatic unless attitude maneuver is requested by LGC, or program alarm occurs.
		LR/RR Read Routine (R20)	Purpose of LR/RR Read Routine (R20) is to read LR/RR parameters requested by the calling routine (R22), to perform various checks to ensure that system is operating correctly, and to ensure an alarm if errors occur in RR reading.
		Poss PROG lt - on Poss RNDZ RADAR: NO TRACK lt - on Poss TRACKER lt - on	TRACKER lt indicates program is unable to obtain good radar samples on each required pass.
		Key V05 N09E - Call alarm 00520 - RADARUPT not expected at this time or no radar sampling requested at this time Key KEL REL & RSET - Return to step 11 (R21) for automatic reacquisition	RADARUPT: LGC interrupt.
		*Poss FL V05 N09 - Alarm PRIO DISP lt - on 00525 - $\Delta\theta$ >3° PROG lt - on To terminate P20: Key RSET & V34E or V56E, perform Terminate Tracking Routine (R56) PRIO DISP lt - off	$\Delta\theta$ = difference between RR indicated LOS and state-vector-indicated LOS. Asterisk (*) indicates priority display. Two-second delay is required before LGC will accept crew response.

LM 319

CREW-MAN	PNL	PROCEDURES	REMARKS
		4.8.2.1 LM Rendezvous Navigation Program (P20) (cont) To continue: Key RSET & PRO PRIO DISP lt - off PRIO DISP lt- on *FL V06 N05 R1 Δθ XXX.XX° R2 ----- R3 ----- To accept Δθ for state vector update: Key PRO PRIO DISP lt - off If LOS not within 30° of LM +Z axis, go to step 18. To reject: Key V32E - Recycle to step 11 (R21) for automatic reacquisition PRIO DISP lt - off To terminate P20: Key V34E or V56E, perform Terminate Tracking Routine (R56) PRIO DISP lt - off	Display is flashed only when alarm 00525 appears and PRO is keyed.
		Fine Preferred Tracking Attitude Routine (R65)	
		18. Poss Attitude Maneuver Routine (R61/R60) If pointing error <15°, maneuver will occur without displays. Return to step 17. PRIO DISP lt - on *FL V50 N18 - Perform desired automatic maneuver to final FDAI angles R1 Roll XXX.XX° R2 Pitch XXX.XX° R3 Yaw XXX.XX° To reject attitude maneuver: When within DAP deadband limits, & further adjustment about desired vector is not desired, Key ENTR, exit R60 - Return to step 17 PRIO DISP lt - off To perform attitude maneuver: a. To adjust vehicle attitude & have LGC recompute gimbal angles: Select desired attitude control mode -	Automatic attitude maneuvers are more efficient (i.e., propellant-time product is lower) than manual attitude maneuvers. If final computed FDAI angles result in ±90° yaw, transformation from IMU to FDAI angles in roll and pitch is indeterminate and R1 and R2 will be zero. Adjustment is not possible in all cases, including roll attitude adjustment. Ref para 4.5.1

CREW-MAN	PNL	PROCEDURES	REMARKS
		4.8.2.1 LM Rendezvous Navigation Program (P20) (cont)	
	ACA	ACA - maneuver as desired S/C: PGNS sw - ATT HOLD Key PRO PRIO DISP lt - off Return to beginning of step 18.	If GUID CONT sw - PGNS and S/C: PGNS sw - AUTO, LGC commands automatic attitude maneuver.
		b. To perform attitude maneuver manually: Select desired attitude control mode -	
	ACA	ACA - maneuver manually to required attitude Key PRO PRIO DISP lt - off Return to beginning of step 18.	
		c. To perform attitude maneuver automatically: GUID CONT sw - PGNS S/C: PGNS sw - AUTO Key PRO Go to step 19.	Automatic trim maneuver is to be considered essential for maneuvering to thrusting attitudes.
		19. If PGNCS Automatic selected: Pre-R60 displays return until completion of automatic maneuver. Monitor FDAI belly band, with respect to color band on roll bezel, to avoid gimbal lock.	If desired, Key extended verbs or Key V16 N18 - Final FDAI angles R1 Roll XXX.XX° R2 Pitch XXX.XX° R3 Yaw XXX.XX° Key KEY REL Belly band covers separation between hemispheres of FDAI ball. Belly band, in color bands on each side of FDAI roll bezel, would indicate IMU middle gimbal angle $\geq 75°$.
		To stop LM motion if gimbal lock is approached: S/C: PGNS sw - ATT HOLD	During this maneuver, LGC will terminate automatic maneuver if S/C: PGNS sw is switched out of AUTO.
		If manual override & completion of maneuver is desired: Select desired attitude control mode	Ref para 4.5.1.
	ACA	ACA - maneuver manually Return to step 18.	

LM 3158, LM 3199

CREW-MAN	PNL	PROCEDURES	REMARKS
		4.8.2.1 LM Rendezvous Navigation Program (P20) (cont)	
		20. *Poss FL V06 N49 - Out-of-tolerance update parameters PRIO DISP lt - on R1 ΔR XXX.XX nm R2 ΔV XXXX.X fps R3 0000X Source code To accept update: Key PRO (incorporate mark data), return to step 17 PRIO DISP lt - off Reject options: a. Reject data from source specified by source code only: Key V32E - Return to step 17 PRIO DISP lt - off or b. Reject all data from this mark: Key V34E - Return to step 17 PRIO DISP lt - off or c. Terminate R22 & P20: Key V56E - Reselect P20 & acquire manually PRIO DISP lt - off	Asterisk (*) indicates priority display. Two-second delay is required before LGC will accept crew response. X = 1 - RR range X = 2 - RR range rate X = 3 - RR shaft angle X = 4 - RR trunnion angle

RC 160c

CREW-MAN	PNL	PROCEDURES	REMARKS
		4.8.2.1 LM Rendezvous Navigation Program (P20) (cont)	
		21. RR Monitor Routine (R25) - is called every 0.48 sec whenever LGC is on Poss PROG lt - on RNDZ RADAR: NO TRACK lt - on TRACKER lt - on Key V05 N09E - Call alarm 00515 - RR CDU failure Key KEY REL & RSET	Routine 25 monitors RR gimbal angles and commands gimbal angles to one of two reference positions (dependent on antenna mode) if gimbals exceed predefined limits. Routine 25 zeroes RR CDU when RR is first put into automatic mode and monitors RR CDU for possible failure.
		Attempt to continue P20, using V06 N49 display, any additional alarm codes, & MSFN to evaluate CDU performance.	Ref para 5.2.2, malfunction procedures, Primary Guidance & Navigation Section.
		If CDU performance is unsatisfactory: Key V56E - Terminate	RR use under LGC control is not possible. RR can be used in slew or automatic track modes.
		22. To terminate P20: Key V56E, perform Terminate Tracking Routine (R56) exit to other program in process, or If no other program in process: FL V37 N-- Key XXE	Select desired program.
		4.8.2.2 AGS Manual Rendezvous Radar LM State Vector Update	Purpose of AGS Manual Rendezvous Radar LM State Vector Update procedure is to update AGS LM state vector, using rendezvous radar range, range rate, and LOS data. Due to program rescaling limitations, rendezvous radar navigation state vector updating capability does not exist when AGS FP 8 is used in earth orbit.
		AGS Power-Up (required)	Ref para 4.6.2.1.
		AGS Checkout (desired)	Ref para 4.6.2.4.
		AGS alignment valid with X-Z inertial reference plane within 10° of CSM orbit plane	PGNCS/AGS Align procedure (para 4.9.2.1), AGS Lunar Align procedure (para 4.9.3.2), or Backup AGS Alignment Procedure (para 4.9.2.2/4.9.2.3).
		AGS time valid (required)	AGS Manual Absolute Time Initialization procedure (para 4.6.2.6) or AGS Initialization Routine (para 4.6.1.18) AEA clock will overflow 4396 minutes (approximately 73 hours) after initialization at zero.

CREW-MAN	PNL	PROCEDURES	REMARKS
		4.8.2.2 AGS Manual Rendezvous Radar LM State Vector Update (cont)	
		AGS LM/CSM state vector valid (required)	AGS Initialization Routine (R47) (para 4.6.1.18) or AGS Manual LM State Vector Update/Initialization and AGS Manual CSM State Vector Update/Initialization (para 4.6.2.7 and 4.6.2.9)
		Rendezvous Radar Power-Up (required)	Ref para 4.6.3.1.
		Rendezvous Radar Checkout (required)	Ref para 4.6.3.2.
	3	1. RADAR TEST sw - OFF	Disables RR test signals.
	1	2. Establish range/range rate display mode: RNG/ALT MON sw - RNG/RNG RT	Ref para 4.5.3.10.
		3. Compute CSM acquisition maneuver. Select normal acquisition steering: Key DEDA C 507+00000E Command acquisition steering computations: Key DEDA C 400+20000E	AEA computes attitude errors to point LM +Z body-axis in direction of AEA-estimated LM-CSM LOS.
		4. Perform AGS Orientation to Initial Computed Steering Attitude, using acquisition Z-axis steering.	Ref para 4.6.2.13.
	1	5. Establish RR contact with CSM: Establish RR shaft/trunnion angle & azimuth/elevation rate displays: SHFT/TRUN ∡ sw - ±5° X POINTER SCALE sw - as desired RATE/ERR MON sw - RNDZ RADAR	Ref para 4.5.3.6 and 4.5.3.7.
	3	Establish radar signal strength display: RADAR: TEST/MON sel - AGC Establish manual control of RR antenna: RNDZ RADAR sel - SLEW RNDZ RADAR: SLEW RATE sw - as desired Slew RR antenna to null RR shaft & trunnion angle display one axis at a time. As second axis approaches null, observe RADAR: SIGNAL STRENGTH ind to determine & lock onto strongest lobe. Slew antenna to check first axis for strongest lobe.	Ref para 4.5.3.12.
		Perform further main-lobe acquisition verification as required.	Rendezvous Radar Manual Side-Lobe Acquisition Check & Main-Lobe Acquisition Verification (para 4.6.3.15)

CREW-MAN	PNL	PROCEDURES	REMARKS
		4.8.2.2 AGS Manual Rendezvous Radar LM State Vector Update (cont)	
		6. Establish RR tracking of CSM: RNDZ RADAR sel - AUTO TRACK RNDZ RADAR: NO TRACK lt - off Establish AGS attitude command mode: S/C: AGS sw - ATT HOLD DEAD BAND sw - MAX or ROLL, PITCH, & YAW sw - PULSE or DIR	Ref para 4.5.1.6. This is necessary to conserve fuel, in case of delay to next step.
		7. Initialize radar filter: Key DEDA C 417+10000E	Before taking each set of radar data, DEDA address 417 must be set to +10000, to initialize radar filter. It is recommended that radar data entry schedule consist of sequence of at least six range and five range rate entries in alternating order (beginning and ending with range entry). At long ranges (pre-CSI), radar data entry schedule should consist of a sequence of at least nine range and eight range rate entires in alternating order. Time between range updates should be maintained relatively constant in any updating sequence, and should be between 2 and 6 minutes. It is desirable that total time interval between first and last range entry in a given sequence be large in order to take advantage of changing geometry.
		8. Perform RR range update: S/C: ROLL, PITCH, & YAW sw - MODE CONT, PULSE, or DIR Enter RR range data: a. Store Z-body-axis direction cosines -	
	ACA	(1) Key DEDA 415+10000 (Do not enter.) (2) S/C: DEAD BAND sw - MIN (3) ACA - rotate LM to null shaft & trunnion angle display	At least 16 seconds must elapse between last entry of range or range rate and entry into 415.
		(4) When RR shaft & trunnion angles null, command AEA to store Z-body-axis direction cosines: Key DEDA ENTR	If gimbal angles are not zeroed when ENTR is keyed, repeat step 8a.
	1	b. Obtain & load range data: (1) Note RR range on RANGE ind. (2) Enter range value - Key DEDA C 316+XXXXXE (0.01/0.1)	
	3	c. S/C: DEAD BAND sw - MAX	Range data should be entered within 30 seconds of step 8a(4). Parenthetical quantization notation: lunar mission/earth mission.

CREW-MAN	PNL	PROCEDURES	REMARKS
		4.8.2.2 AGS Manual Rendezvous Radar LM State Vector Update (cont)	
		9. Enter range rate data:	One range rate entry is recommended between every pair of range entries.
		a. Store Z body-axis direction cosines - (1) Key DEDA C 415+10000 (Do not enter)	No special orientation is necessary; it is only necessary for rendezvous radar to be locked onto CSM. At least 4 seconds must elapse between last entry of range or range rate and entry into 415.
		(2) Key DEDA ENTR	If range rate data are not satisfactory, repeat step 9a.
		b. Load RR range rate value - Key DEDA C 503±XXXXXE (0.1/1 fps)	Range rate data should be entered within 30 seconds of step 9a(2). Parenthetical quantization notation: lunar mission/earth mission. If range rate value is displayed on black portion of RANGE RATE ind tape, positive range rate DEDA entry is indicated; negative is closing rate.
		10. Repeat steps 8 & 9 in sequence & total number as described in remark opposite step 7.	
		4.8.2.3 AGS Automatic Rendezvous Radar LM State Vector Update (Raw Data Transfer Via LGC)	Purpose of AGS Automatic Rendezvous Radar LM State Vector Update (Raw Data Transfer Via LGC) procedure is to update AGS LM state vector using rendezvous radar range, range rate and LOS data extracted from the PGNCS Rendezvous and Pre-thrust Downlist.
		AGS Power up (required)	Ref para 4.6.2.1.
		AGS Checkout (desired)	Ref para 4.6.2.4.
		AGS alignment valid with X-Z inertial reference plane within 10° of CSM orbit plane	PGNCS/AGS Align procedure (para 4.9.2.1), AGS Lunar Align procedure (para 4.9.3.2), or Backup AGS Alignment procedure (para 4.9.2.2/4.9.2.3).
		AGS time valid (required)	AGS Manual Absolute Time Initialization procedure (para 4.6.2.6) or AGS Initialization Routine (para 4.6.1.18) AEA clock will overflow 4396 minutes (approximately 72 hours) after initialization at zero.
		AGS LM/CSM State Vector Valid (required)	AGS Initialization Routing (R47) (para 4.6.1.18) or AGS Manual LM/CSM State Vector Update/Initialization (para 4.6.2.7 & 4.6.2.9).

LM 983, LM 3181A, LM 3231

CREW-MAN	PNL	PROCEDURES	REMARKS
		4.8.2.3 AGS Automatic Rendezvous Radar LM State Vector Update (Raw Data Transfer Via LGC) (cont)	
		LGC Power-Up (required)	Ref para 4.6.1.1.
		LGC Self-Test (desired)	Ref para 4.6.1.13.
		TLM PCM sw - HI	S-band Steerable Antenna Activation and Checkout (para 4.2.20).
		Rendezvous Radar Initial Activation & Checkout (required)	Ref para 4.6.3.2.
		CSM RR Transponder Activation (required)	
		Rendezvous Radar locked on to CSM transponder (required)	LM Rendezvous Navigation Program P20 (para 4.8.2.1), AGS Manual Rendezvous Radar LM State Vector Update (para 4.8.2.2). Rendezvous Radar Coarse Align (para 4.6.3.3).
		PGNCS outputting - Rendezvous & Prethrust List	The PGNCS outputs the rendezvous and prethrust list during the following programs: P20, 21, 25 P30, 32, 33, 34, 35 P72, 73, 74, 75, 76 (except during erasable memory dump via downlink V74).
		1. RADAR TEST sw - OFF	Diasbles RR test signals.
		2. Initialize radar filter Key DEDA C 417+10000E	Before taking each set of radar data, DEDA address 417 must be set to +10000, to initialize radar filter. It is recommended that the radar data entry schedule consist of a sequence of at least six range entries. At long ranges (such as pre-CSI), a radar data entry schedule should consist of a sequence of at least nine range entries. It is recommended that the automatic procedure be used whenever the PGNCS is in operation.
		3. Command automatic RR update mode. Key DEDA C411+10000E	In the automatic RR updating mode, range updates will be approximately two minutes apart (with range rate updates at alternate minutes). During the updating period, the radar shaft and trunnion angles should be maintained at about 5° or less and the

RC 1607

CREW-MAN	PNL	PROCEDURES	REMARKS
		4.8.2.3 AGS Automatic Rendezvous Radar LM State Vector Update (Raw Data Transfer Via LGC) (cont)	
			vehicle rate should be kept reasonably low (0.1 to 0.2 deg/sec.) When the shaft or trunnion angle exceeds 11.25°, the radar data transmitted via the PGNCS downlink will not be accepted.
			To terminate automatic RR update mode; Key DEDA C411+00000E
			It is considered good practice to begin and terminate automatic RR update mode only during PGNCS Rendezvous & Pre-thrust downlist. Actual updating occurs only when all pre-requisites are met.
		4. Monitor update mark counter Key DEDA C621R XXOYY	Address 621 reset by C417+10000E XX - member of range updates YY - member of range rate updates
		5. The following additional displays are available is desired: a. Range/range rate update next - C 606R - (+00000/-XXXXX) b. AGS range - C 317R (0.01/0.1 nm) c. AGS range rate - C 440R (0.1 fps)	Parenthetical quantization notation: lunar mission/ earth mission
		4.8.3 LUNAR SURFACE NAVIGATION	
		4.8.3.1 Lunar Surface Navigation Program (P22)	Purpose of Lunar Surface Navigation Program (P22) is to acquire and track CSM by positioning RR antenna along LOS to CSM. At beginning of program, state vector option is automatically set to CSM, but does not override previous V95E; this option can be inhibited any time and restored at later time by following entries: 1. No state vector update (V95E) 2. CSM state vector update (V81E) This program tracks CSM with RR in mode 2; therefore, antenna coverage is less than horizon to horizon.

LM 983, LM 3181A, LM 3231

CREW-MAN	PNL	PROCEDURES	REMARKS
		4.8.3.1 Lunar Surface Navigation Program (P22) (cont)	
		LGC Power-Up (required)	Ref para 4.6.1.1.
		IMU Power-Up (LGC Operating) (required)	Ref para 4.6.1.3. ISS should be on 15 minutes before thrusting maneuver.

RC 1595

CREW-MAN	PNL	PROCEDURES	REMARKS
		4.8.3.1 Lunar Surface Navigation Program (P22) (cont)	
		LGC Self-Test (desired)	Ref para 4.6.1.13.
		LGC/CMC Clock Synchronization (R33) (desired)	Ref para 4.6.1.15.
		Rendezvous Radar Initial Activation & Checkout (required)	Ref para 4.6.3.2. Rendezvous radar must be turned on 2.5 hours before use.
		CSM RR Transponder Activation (required)	Display of RR LOS azimuth and elevation (para 4.5.3.14) is available throughout program.
		1. Verify/set controls as follows:	When range/altitude rate input is <5 fps, RNG/ALT ind pwr/sig fail lt goes on. This does not represent malfunction, but condition inherent in detection circuitry. This will occur when CSM overpasses LM position and RR range rate goes through zero.
	1	GUID CONT sw - PGNS	
		RNG/ALT MON sw - RNG/RNG RT	
	3	RADAR TEST sw - OFF	
		RNDZ RADAR sel -LGC	Allow 10 seconds between RNDZ RADAR sel-LGC and step 2 (Key V37E20E) to help avoid a software restart during LGC RR CDU zero. A restart (Hardware or software) during LGC "RR turn on" sequence can cause later erratic designate behavior. Recovery: RNDZ RADAR sel-LGC-to-SLEW-to-LGC.
		2. Key V37E 22E	
		3. FL V04 N06 - Option R1 00012 - CSM orbit option R2 00001 - LGC assumed option (CSM will not change present orbit) R3 ----- R2 = 1 - CSM will not change present orbit = 2 - CSM will change present orbit to go over LM position Accept: Key PRO, go to step 5 Reject: Key V22E - Key 2E, go to step 4 (CSM will change present orbit to go over LM position)	
		4. If desired option not 00001: FL V06 N33 - TIG R1 00XXX hr R2 000XX min R3 0XX.XX sec Accept: Key PRO Reject: Key V25E - Load desired TIG	Estimated launch time is displayed; CSM orbit change, option 2, is selected.

CREW-MAN	PNL	PROCEDURES	REMARKS
		4.8.3.1 Lunar Surface Navigation Program (P22) (cont)	
		5. Poss PROG lt - on Key V05 N09E - Call alarm 00210 - IMU not on 00220 - Bad REFSMMAT (ISS orientation not known)	Perform IMU Power-Up (LGC Operating) procedure (para 4.6.1.3) Perform PGNCS Lunar Surface Align Program (P57) (para 4.9.3.1)
		Key KEY REL & RSET FL V37 N-- Key XXE Exit R02 & P22	Reselect P22.
		Poss V16 N54 R1 range XXX.XX nm (999.99 will be displayed R2 range rate XXXX.X fps for values ≥ 999.99nm) R3 00000	Display appears while range is >400 nm and is decreasing. The display is recalculated every 5 seconds.
		Poss FL V37	FL V37 occurs if range >400 nm and is increasing.
		6. To terminate CSM state vector update: Key V95E - No state vector update	At beginning of program, LGC automatically sets state vector to be updated to CSM, but does not override previous V95E.
		7. Poss FL V50 N25 - Checklist reference R1 00201 - Switch to RR automatic mode R2 ----- R3 ----- RNDZ RADAR sel - LGC Key PRO	This display is called only when RNDZ RADAR sel is not set to LGC.
		8. RR automatic acquisition (RR Designate Routine, R21) If acquisition is successful (no alarm), go to step 11. Lunar Surface RR Predesignate Routine (R26) PRIO DISP lt - on *FL V05 N09 - Alarm 00530 - LOS not in mode 2 coverage on lunar surface after 10 min	Asterisk (*) indicates priority display. Two-second delay is required before LGC will accept crew response.
		Perform time check for P22 recall Key PRO - Exit R26, R21, & P22 PRIO DISP lt - off FL V37 N-- Key XXE *Poss FL V05 N09 - Alarm PRIO DISP lt - on 00503 - RR unable to acquire CSM	

RC 1606

CREW-MAN	PNL	PROCEDURES	REMARKS
		4.8.3.1 Lunar Surface Navigation Program (P22) (cont) PROG lt - on RNDZ RADAR: NO TRACK lt - on Key RSET Alternatives to alarm: a. Key V32E - Recycle to start of step 8, R21, to re-designate RR PRIO DISP lt - off b. Key PRO - Initiate RR Search Routine (R24), steps 9 & 10. PRIO DISP lt - off c. Key V34E or V56E, perform Terminate Tracking Routine (R56) - Terminate R21 & P22 PRIO DISP lt - off FL V37 N-- Key XXE	
		9. Rendezvous radar search acquisition - Perform RR Search Routine (R24) Poss PROG lt - on Key V05 N09E - Call alarm 00527 - CSM out of RR mode II limits Key V56E, perform Terminate Tracking Routine (R56) - exit R24 & P22 PRIO DISP lt - on	Confirm, by voice, that CSM is in preferred attitude and that transponder is active.
		*FL V16 N80 R1 XXXXX (initially 00000) R2 Ω XXX.XX° (initially 00000 until designation begins) R3 -----	Asterisk (*) indicates priority display. Two-second delay is required before LGC will accept crew response. R1 displays 11111 after RR Search Routine (R24) is successfully completed. Ω = angle between RR boresight and LM +Z axis.
		10. Permit RR to search until V16 N80, R1 displays 11111. Key PRO - Return to step 5 PRIO DISP lt - off If CSM is not acquired: Key V34E - Exit R24 & P22 PRIO DISP lt - off	
		11. RR Data Read Routine (R22), steps 11 & 12.	RR Data Read Routine (R22) processes RR mark data to update CSM state vector, defined in step 6. If M (number of marks) is desired: Key V16 N45E R1 M XXXXX marks R2 TFI XXBXX min-sec R3 MGA XXX.XX°

NAV

CREW-MAN	PNL	PROCEDURES	REMARKS
		4.8.3.1 Lunar Surface Navigation Program (P22) (cont)	
			When finished with display, key KEY REL TFI and MGA displays are meaningless.
		LR/RR Read Routine (R20)	Purpose of LR/RR Read Routine (R20) is to read LR/RR parameters requested by calling routine (R22), to perform various checks to ensure that system is operating correctly, and to ensure an alarm if errors occur in RR reading.
		Poss PROG lt - on Poss RNDZ RADAR: NO TRACK lt - on Poss TRACKER lt - on	TRACKER lt indicates program is unable to obtain "good" radar samples on each required pass.
		Key V05 N09E - Call alarm 00520 - RADARUPT not expected at this time or No radar sampling requested at this time Key KEY REL & RSET - Return to step 8 (R21) for automatic reacquisition	RADARUPT: LGC interrupt.
		*Poss FL V05 N09 - Alarm PRIO DISP lt - on 00525 - Δθ >3° PROG lt - on To terminate P22: Key RSET & V34E or V56E, perform Terminate Tracking Routine (R56) PRIO DISP lt - off To continue: Key RSET & PRO PRIO DISP lt - off	Asterisk (*) indicates priority display. Two-second delay is required before LGC will accept crew response.
		PRIO DISP lt - on *FL V06 N05 R1 Δθ XXX.XX° R2 ----- R3 ----- To accept Δθ for state vector update: Key PRO PRIO DISP lt - off	Display is flashed only when alarm 00525 appears and PRO is keyed.

LM 3199

CREW-MAN	PNL	PROCEDURES	REMARKS
		4.8.3.1 Lunar Surface Navigation Program (P22) (cont) To reject: a. Verify acquisition is not by side lobe Key V32E - Recycle to step 8 (R21) for automatic reacquisition PRIO DISP lt - off b. Key V34E or V56E, perform Terminate Tracking Routine (R56) - Terminate R22 & P22 PRIO DISP lt - off FL V37 N-- Key XXE 12. *Poss FL V06 N49 - Out-of-tolerance update parameters PRIO DISP lt - on R1 ΔR XXX.XX nm R2 ΔV XXXX.X fps R3 0000X Source Code R3 X = 1 - range X = 2 - range rate To accept update: Key PRO PRIO DISP lt - off Reject options: a. Reject data from source specified by source code only: Key V32E - Return to step 11 PRIO DISP lt - off or b. Reject all data from this mark: Key V34E - Return to step 11 PRIO DISP lt - off or c. Terminate R22 & P22 Key V56E PRIO DISP lt - off FL V37 N-- Key XXE 13. RR Monitor Routine (R25) is called every 0.48 second whenever LGC is on.	Routine 25 monitors RR gimbal angles and commands gimbal angles to reference position if gimbal angles exceed predefined limits. Routine 25 zeroes RR CDU when RR is first put into automatic mode and monitors RR CDU for possible failure.

NAV

LM 3199

CREW-MAN	PNL	PROCEDURES	REMARKS
		4.8.3.1 Lunar Surface Navigation Program (P22) (cont) Poss PROG lt - on RNDZ RADAR: NO TRACK lt - on TRACKER lt - on Key V05 N09E - Call alarm 00515 - RR CDU failure Key KEY REL & RSET	

CREW-MAN	PNL	PROCEDURES	REMARKS
		4.8.3.1 Lunar Surface Navigation Program (P22) (cont) Attempt to continue P22. If initial acquisition or reacquisition is required (after failure) and if CDU performance is unsatisfactory (in this case preventing such acquisition), follow procedures for 00503 alarm in step 8 (and possibly step 10) above. 14. To terminate P22: Key V56E, perform Terminate Tracking Route (R56) FL V37N-- Key XXE	

PARA	TITLE	PAGE
4.9	Alignment	4.9.2
4.9.1	PGNCS	4.9-2
4.9.1.1	IMU Orientation Determination Program (P51)	4.9-2
4.9.1.2	IMU Realign Program (P52)	4.9-5
4.9.1.3	ISS Coarse Align	4.9-14
4.9.1.4	Torque Gyros	4.9-14A
4.9.1.5	Docked Manual IMU Coarse Alignment	4.9-16
4.9.1.6	Crescent Alignment of PGNCS (IMU)	4.9-16A
4.9.1.7	LM IMU Alignment to CSM Gyro Display Coupler (GDC)	4.9-16C
4.9.2	AGS	4.9-17
4.9.2.1	PGNCS/AGS Align	4.9-17
4.9.2.2	Backup AGS Alignment (Using AGS Body-Axis Alignment and PGNS IMU)	4.9-19
4.9.2.3	Backup AGS Alignment (Using AGS Body-Axis Alignment and AOT)	4.9-20
4.9.2.4	Crescent Alignment to AGS (ASA)	4.9-22
4.9.2.5	AGS Alignment of CSM Gyro Display Coupler or CSM Primary System	4.9-22A
4.9.3	Lunar Surface Alignment	4.9-22B
4.9.3.1	PGNCS Lunar Surface Align Program (P57)	4.9-22B
4.9.3.2	AGS Lunar Align (400+40000)	4.9-29

CREW-MAN	PNL	PROCEDURES	REMARKS
		4.9 ALIGNMENT	
		4.9.1 PGNCS	
		4.9.1.1 IMU Orientation Determination Program (P51)	Time and RCS fuel may be saved and subsequent IMU realignment decisions simplified if IMU is left inertially stabilized as close as possible to orientation required by future LGC programs. If docked with CSM, CSM should relinquish attitude control. P51 determines inertial orientation of IMU and provides attitude control and total attitude monitoring capability.
		LGC Power-Up (required)	Ref para 4.6.1.1.
		IMU Power-Up (LGC Operating) (required)	Ref para 4.6.1.3. ISS should be on 15 minutes before thrusting maneuver.
		DAP Data Load Routine (R03) (required)	Ref para 4.6.1.8.
		AGS Power-Up (desired)	Ref para 4.6.2.1.
		Rendezvous Radar Antenna in AOT position (desired)	Rendezvous Radar Coarse Align (para 4.6.3.3).
	11	1. Verify CB HTR: AOT - close	AOT heater should be turned on at least 25 minutes before selecting this procedure, to prevent fogging of AOT lens.
		2. Select total attitude display:	
	1	ATTITUDE MON sw - as desired	
	11	3. CB/AC BUS A: AOT LAMP - close	CB/AC BUS B: AOT LAMP and CB/AC BUS A: AOT LAMP are redundant. If a-c bus A loading is large, CB/AC BUS B: AOT LAMP can be closed. Never close both cb's at same time.
		Adjust reticle brightness of CCRD.	
	AOT	AOT ind - 000.0°	
		Azimuth cont - F	
		4. Key V37E 51E	
		Poss PROG lt - on	
		Key V05 N09E - Call alarm	
		00210 - IMU not on	
		Perform IMU Power-Up.	Ref para 4.6.1.3.
		Key RSET & KEY REL	
		FL V37 N--	
		Key 51E	

LM 3231

CREW-MAN	PNL	PROCEDURES	REMARKS
		4.9.1.1 IMU Orientation Determination Program (P51) (cont)	
		5. FL V50 N25 - Checklist reference R1 00015 - Star acquisition R2 ----- R3 ----- If necessary, select desired attitude control mode.	V16 N20E may be keyed to monitor IMU gimbal angles. Ref para 4.5.1.
		Maneuver to acquire desired stars. To bypass coarse alignment: Key PRO	
		To coarse-align IMU to LM axes: Key ENTR V41 N22 - Coarse align R1 OGA 000.00° R2 IGA 000.00° R3 MGA 000.00°	
	4	NO ATT lt - on, then off, Return to beginning of step 5.	
		6. In-Flight Sighting Mark Routine (R53, steps 6 through 8): Poss PROG lt - on Key V05 N09E - Call alarm 31207 - No VAC area for marks 31211 - Illegal interrupt of extended verb Key RSET & KEY REL	Star pairs should be separated by at least 50°.
		FL V01 N71 R1 00CDE - Detent/star code R2 ----- R3 ----- Accept: Key PRO Reject: Key V21E - Load desired codes	AOT detent/LPD/COAS codes (para 4.4.12). Star/planet list (para 4.4.8).
		If detent code 7 (backup optics) is being used, go to step 7; otherwise, go to step 8.	
		7. FL V06 N87 R1 Azimuth XXX.XX° R2 Elevation XXX.XX° R3 -----	Azimuth is defined as angle measured from LM +Z-axis to LOS projected on LM Y-Z plane; +, for negative rotation about LM +X-axis (yaw right).

CREW-MAN	PNL	PROCEDURES	REMARKS
		4.9.1.1 IMU Orientation Determination Program (P51) (cont)	
		Accept: Key PRO Reject: Key V24E - Load desired data	Elevation is defined as angle measured from LOS to LM Y-Z plane; +, for LOS above LM Y-Z plane.
		8. FL V54 N71 - Please mark X or Y R1 00CDE - Detent/Star code R2 Z000X - X marks R3 Z000Y - Y marks	Maximum value for X or Y is 5; additional marks overwrite fifth mark. Z=1 in R2/R3 indicates which mark is enabled for rejecting. Mark reject is enabled for only one axis at a time. Normally, Z=1 for last axis marked; however, mark reject enable may be switched back and forth between X and Y axes by keying ENTR.
		Select desired attitude control mode:	Ref para 4.5.1. PGNCS minimum impulse mode (V76E) (NO DAP lt - on) is recommended, but AGS pulse or direct may also be used. PGNCS minimum impulse is disabled by keying V77E. (NO DAP lt - off)
		Maneuver so target crosses near center of reticle (either AOT or COAS).	
		Mark X or Y, as appropriate (at least one of each required).	To reduce possible error induced by ICDU transients, three to five pairs of marks (X & Y) should be made on each star.
		To change mark reject option: Key ENTR To change Detent/Star code: Key V32E, return to step 6 To terminate: Key V34E FL V37 N-- Key XXE	
		MARKRUPT ROUTINE (R57) Possible program alarms: PROG lt - ON Key V05 N09E - Call alarm 00111 - Mark missing 00112 - Mark or mark reject not being accepted 00113 - No inbits 00115 - No marks to reject Key KEY REL & RSET	To reject X or Y mark as indicated in R2/R3 of N71, REJECT pb - push
		To have LGC calculate LOS to star after marking sequence is complete: Key PRO If star code 00, go to step 9; otherwise, go to step 6 to mark on second star. After marking second star, go to step 10 or if second target was planet (star code 00), go to step 9.	

LM 3231

CREW-MAN	PNL	PROCEDURES	REMARKS
		4.9.1.1 IMU Orientation Determination Program (P51) (cont)	
		9. Celestial Body Definition Routine (R58) FL V06 N88 - Components of planet unit position vector R1 X .XXXXXX R2 Y .XXXXXX R3 Z .XXXXXX Accept: Key PRO - Go to step 6 to mark on second star or if this was second target, go to step 10. Reject: Key V25E - Load desired components	Components defined at GET in reference coordinates. Components may be computed manually onboard or received from MSFN.
		10. Sighting Data Display Routine (R54): FL V06 N05 R1 XXX.XX° - Sighting angle difference R2 ----- R3 ----- Accept: Key PRO Reject: Key V32E - Go to step 5.	N05 is defined as difference between indicated angle (from marks) and actual angle (stored ephemeris data). LGC responds to PRO by calculating REFSMMAT and setting REFSMFLG.
		11. FL V37 N-- Key XXE	Select desired program.
	11	12. Remove power from AOT as desired: CB/AC BUS A: AOT LAMP - open CB/AC BUS B: AOT LAMP - open	
		4.9.1.2 IMU Realign Program (P52)	If docked with CSM, CSM should relinquish attitude control. Purpose of IMU Realign Program (P52) is to align IMU from known orientation to one of four orientations selected by crew: 1. Preferred 2. Nominal 3. REFSMMAT 4. Landing site
		LGC Power-Up (required)	Ref para 4.6.1.1.
		IMU Power-Up (LGC Operating) (required)	Ref para 4.6.1.3. ISS should be on 15 minutes before thrusting maneuver.
		IMU Orientation Determination Program (P51) (required)	Ref para 4.9.1.1.
		DAP Data Load Routine (R03) (required)	Ref para 4.6.1.8.

LM 3231

CREW-MAN	PNL	PROCEDURES	REMARKS
		4.9.1.2 IMU Realign Program (P52) (cont)	
		AGS Power-Up (desired) Rendezvous radar antenna in AOT position (desired)	Ref para 4.6.2.1. Rendezvous Radar Coarse Align (para 4.6.3.3).
	11	1. Verify CB HTR: AOT - close	AOT heaters should be turned on 25 to 30 minutes before selecting this procedure, to prevent fogging of AOT lens.
		2. Enable PGNCS attitude control	Ref para 4.5.1.
	1	GUID CONT sw - PGNS	
		S/C:	
	3	PGNS sw - ATT HOLD	
		ROLL, PITCH, YAW sw - MODE CONT	
	4	ACA/4 JET sw (2) - ENABLE	
	1,2	ACA PROP sw (2) - ENABLE	
	1,2	3. Select total attitude display: ATTITUDE MON sw - as desired	Allows monitoring of IMU coarse alignment or LM attitude on FDAI's.
	11	4. CB/AC BUS A: AOT LAMP - close	CB/AC BUS B: AOT LAMP and CB/AC BUS A: AOT LAMP are redundant. If a-c bus A loading is large, CB/AC BUS B: AOT LAMP can be closed. Never close both cb's at same time.
	AOT	Adjust reticle brightness on CCRD. AOT ind - 000.0° Azimuth cont - F	
		5. Key V37E 52E Poss PROG lt - on Key V05 N09E - Call alarm 00210 - IMU not on 00220 - IMU orientation not known	Select P51 after IMU Power-Up (LGC Operating) (para 4.6.1.3). Reselect P52 after performing IMU Orientation Determination Program (P51).
		Key KEY REL & RSET FL V37 N-- Key XXE	Select desired program.
		6. FL V04 N06 - Option R1 00001 - Specify IMU orientation R2 00003 - REFSMMAT option R3 ----- Accept: Key PRO Reject: Key V22E - Load desired option:	If preferred attitude has been computed, R2 will read 00001.

LM 3231

CREW-MAN	PNL	PROCEDURES	REMARKS
		4.9.1.2 IMU Realign Program (P52) (cont) 1 - Preferred 2 - Nominal 3 - REFSMMAT 4 - Landing site If preferred selected, go to step 9. If REFSMMAT selected, go to step 11.	
		7. FL V06 N34 - T (Event) R1 00XXX hr R2 000XX min R3 0XX.XX sec	If nominal orientation (00002) was selected in step 6, Time (GET) at which LM state vector is to be defined for nominal orientation. T (Event) will initially be displayed as 00000, 00000, 00000, indicating, if accepted, that present time (GET) will be entered as T (Event).

ALIGN

LM 979A, LM 3231

CREW-MAN	PNL	PROCEDURES	REMARKS
		4.9.1.2 <u>IMU Realign Program (P52) (cont)</u>	If landing site orientation (00004) was selected in step 6, T (Event) is defined as T (Land).
		Accept: Key PRO Reject: Key V25E - Load desired time If nominal selected, go to step 9.	
		8. FL V06 N89 R1 Latitude XX.XXX° R2 Longitude/2 XX.XXX° R3 Altitude XXX.XX nm Accept: Key PRO Reject: Key V25E - Load desired coordinates	
		9. FL V06 N22 - ICDU gimbal angles R1 OGA XXX.XX° R2 IGA XXX.XX° R3 MGA XXX.XX°	Gimbal angles for present LM attitude and selected IMU orientation.
		Check MGA <60° Accept: Key PRO - IMU coarse align Reject:	If MGA ≥60°, PROG lt - on; alarm code 00401 stored.
		Select desired attitude control mode. Maneuver LM to suitable attitude. Key V32E or Key V34E - Terminate P52 FL V37 N--	Ref para 4.5.1. V32E recycles to update gimbal-angle display. Select desired program.
		FL V50 N25 - Perform coarse align & optical sighting. R1 00013 R2 ----- R3 -----	Time (in seconds) to pulse torque for reject option: sum of gimbal angle changes times 2.
		Accept: Key PRO - Go to step 10 Reject: Key ENTR	Error (in degrees) introduced by reject option: sum of gimbal angle changes times 0.002.
		V16 N20 R1 OGA XXX.XX° R2 IGA XXX.XX° R3 MGA XXX.XX°	LM reorientation during pulse torquing is permissible. If S/C: PGNS sw - AUTO, or ATT HOLD and V77 in effect, DAP will maneuver LM to follow IMU as it moves.
		Monitor gimbal angles during pulse torquing, to avoid gimbal lock until realignment is completed.	Crew should maneuver to avoid gimbal lock during pulse torquing, if gimbal lock appears likely.
		Go to step 36.	

LM 3166A, LM 979A

CREW-MAN	PNL	PROCEDURES	REMARKS
		4.9.1.2 IMU Realign Program (P52) (cont)	
		10. Coarse Align Routine (R50)	If all gimbal angle changes are <1°, R50 is not performed.
		Verify completion of coarse alignment: Monitor FDAI ball motion.	Once coarse alignment is complete, LGC will reset preferred orientation flag.
	4	NO ATT lt - on, then off	
		Poss PROG lt - on Key V05 N09E - Call alarm 00211 - Coarse align error 00217 - Bad return from stall routines Key KEY REL & RSET	If, at end of Coarse Align routine, gimbals are not within 2° of desired values, PROG lt will go on.
		11. In-Flight Fine Align Routine (R51), steps 11 through 36 FL V50 N25 R1 00015 Select star acquisition mode R2 ----- R3 -----	Star pairs should be separated by at least 50°.
		Select desired attitude control mode. Maneuver LM to acquire stars: a. Key V34E to terminate P52, FL V37 N--, Key XXE b. Key V32E to select cursor/spiral marking & bypass star-selection routine. Go to step 20. c. Key ENTR to bypass star selection routine or d. Key PRO	Ref para 4.5.1. Star selection routine considers only those stars within AOT forward detent field of view.
		Poss FL V05 N09 - Alarm 00405 - Two stars not available in cone of view PROG lt - on a. Key V32E & RSET - Recycle to beginning of step 11 or b. Maneuver LM to acquire two stars in cone of view. Key PRO & RSET	
		12. Automatic Optics Positioning Routine (R52) FL V01 N70 - Detent/star codes R1 00CDE R2 ----- R3 -----	Star pairs should be separated by at least 50°. AOT detent/LPD/COAS codes (para 4.4.12) Star/planet list (para 4.4.8)

LM 3148A

CREW-MAN	PNL	PROCEDURES	REMARKS
		4.9.1.2 IMU Realign Program (P52) (cont)	
		C = Detent code DE = Star/planet code	All detent and LPD/COAS codes may be used in conjunction with automatic optics (LM) positioning.
		If AOT detent & star code display are correct & a. If not LPD/COAS calibration or b. If unsatisfactory LPD/COAS calibration: Key PRO	Attitude required to position specified optics LOS, along LOS to celestial body, will be computed during R60.
		If display unsatisfactory: Key V21E - Load desired values	
		If this was satisfactory LPD/COAS calibration: Key V34E - Terminate R52 FL V37 N-- Key XXE	
		If detent code is 0 (LPD/COAS calibration) or 7 (backup optics), go to step 13; if star code 00, go to step 14; otherwise, go to step 15.	
		13. FL V06 N87 R1 Azimuth XXX.XX° R2 Elevation XXX.XX° R3 ----- Accept: Key PRO Reject: Key V24E - Load desired data	Azimuth and elevation, with respect to LM, of specified LOS. Azimuth is defined as angle measured from LM +Z-axis to LOS projected to LM Y-Z plane. Polarity is + for negative rotation about LM +X-axis (yaw right). Elevation is defined as angle measured from LOS to LM Y-Z plane. Polarity is + for LOS above LM Y-Z plane.
		If star code is 00, go to step 14, otherwise go to step 15.	If LPD recalibration is required: Key V21 N03E, 3373E, AZBIAS, E V21 N03E, 1353E, ELBIAS, E
		14. FL V06 N88 - Components of planet unit position vector R1 X .XXXXX R2 Y .XXXXX R3 Z .XXXXX Accept: Key PRO Reject: Key V25E - Load desired components	Components of planet unit position vector defined at GET in reference coordinates. Components may be computed manually onboard or received from MSFN.

LM 3158

CREW-MAN	PNL	PROCEDURES	REMARKS
		4.9.1.2 IMU Realign Program (P52) (cont)	
		15. Attitude Maneuver Routine (R60)	Automatic attitude maneuvers are more efficient (i.e., propellant-time product is lower) than manual attitude maneuvers.
		FL V50 N18 - Perform desired automatic maneuver to final FDAI angles R1 Roll XXX.XX° R2 Pitch XXX.XX° R3 Yaw XXX.XX°	If final computed FDAI angles result in ±90° yaw, transformation from IMU to FDAI angles in roll and pitch is indeterminate and R1 and R2 will be zero.
		To reject attitude maneuver: If within DAP deadband limits, & further adjustment about desired vector is not desired, Key ENTR, go to step 17, exit R60/R52	
		If AOT detent position code was 0 (LPD/COAS calibration), exit R60 only & go to step 12.	
		To perform attitude maneuver:	
		a. To adjust vehicle attitude & have LGC recompute gimbal angles:	Adjustment is not possible in all cases, including roll attitude adjustment.
		Select desired attitude control mode -	Ref para 4.5.1.
	ACA	ACA - maneuver as desired	
	3	S/C: PGNS sw - ATT HOLD	If GUID CONT sw - PGNS and S/C: PGNS sw - AUTO, LGC commands automatic attitude maneuver.
		Key PRO	
		Return to beginning of step 15.	
		b. To perform attitude maneuver manually:	
		Select desired attitude control mode -	Ref para 4.5.1.
	ACA	ACA - maneuver to required attitude	
		Key PRO	
		Return to beginning of step 15.	
		c. To perform attitude maneuver automatically:	Automatic trim maneuver is to be considered essential for maneuvering to thrusting attitudes.
	1	GUID CONT sw - PGNS	
	3	S/C: PGNS sw - AUTO	
		Key PRO	
		Go to step 16.	

LM 3158

CREW-MAN	PNL	PROCEDURES	REMARKS
		4.9.1.2 IMU Realign Program (P52) (cont) 16. If PGNCS automatic attitude maneuver selected: DSKY displays are blanked until completion of automatic maneuver. Monitor FDAI belly band, with respect to color band on roll bezel, to avoid gimbal lock.	If desired, Key extended verbs or Key V16 N18 - Final FDAI angles R1 Roll XXX.XX° R2 Pitch XXX.XX° R3 Yaw XXX.XX° Key KEY REL Belly band covers separation between hemispheres of FDAI ball. Belly band, in color bands on each side of FDAI roll bezel, would indicate IMU middle gimbal angle $\geq$ 75°.

LM 3156, LM 979A, LM 3231

CREW-MAN	PNL	PROCEDURES	REMARKS
		4.9.1.2 IMU Realign Program (P52) (cont)	
		Monitor return of preceding display, indicating automatic maneuver is complete. To stop LM motion if gimbal lock is approached: S/C: PGNS sw - ATT HOLD Select desired attitude control mode - ACA - maneuver to required attitude	During this maneuver, LGC will terminate automatic maneuver if S/C: PGNS sw is switched out of AUTO. Ref para 4.5.1.
	ACA		
		Return to step 15.	
		17. In-Flight Sighting Mark Routine (R53) Poss PROG lt - on Key V05 N09E - Call alarm 31207 - No VAC area for marks 31211 - Illegal interrupt of extended verb Key KEY REL & RSET	Star pairs should be separated by at least 50°.
		FL V01 N71 - Detent/star codes R1 00CDE R2 ----- R3 ----- Accept: Key PRO Reject: Key V21E - Load desired codes	AOT detent/LPD/COAS codes (para 4.4.12). Star/planet list (para 4.4.8).
		If detent code 7 (backup optics) is being used, go to step 18; otherwise, go to step 19.	
		18. FL V06 N87 R1 Azimuth XXX.XX° R2 Elevation XXX.XX° R3 ----- Accept: Key PRO Reject: Key V24E - Load desired data	Azimuth and elevation, with respect to LM, of specified LOS. Azimuth is defined as angle measured from LM +Z-axis to LOS projected to LM Y-Z plane. Polarity is + for negative rotation about LM +X-axis (yaw right). Elevation is defined as angle measured from LOS to LM Y-Z plane. Polarity is + for LOS above LM Y-Z plane.

CREW-MAN	PNL	PROCEDURES	REMARKS
		4.9.1.2 IMU Realign Program (P52) (cont)	
		19. FL V54 N71 - Please mark X or Y R1 00DSS - Detent/Star codes R2 Z000X - X marks R3 Z000Y - Y marks	Maximum value for X or Y is 5; additional marks overwrite fifth mark. Z=1 in R2/R3 indicates which mark is enabled for rejecting. Mark reject is enabled for only one axis at a time. Normally, Z=1 for last axis marked; however, mark reject enable may be switched back and forth between X and Y axes by keying ENTR.
		Select desired attitude control mode.	Ref para 4.5.1. PGNCS minimum impulse mode (V76E) (NO DAP 1t - on) is recommended, but AGS pulse or direct may also be used. PGNCS minimum impulse is disabled by keying V77E. (NO DAP 1t - off) To reduce possible error induced by ICDU transients, three to five pairs of marks (X and Y) should be made on each star.
		Maneuver for target crossing near center of reticle (AOT or COAS). Mark X or Y, as appropriate (at least one of each required).	
		To change mark reject option: Key ENTR To change Detent/Star code: Key V32E, return to step 17 To terminate: Key V34E FL V37 N-- Key XXE	
		MARKRUPT Routine (R57) Poss PROG 1t - on To display alarm code: Key V05 N09E - Call alarm 00111 - Mark missing 00112 - Mark or mark reject not being accepted 00113 - No inbits 00115 - No marks to reject Key KEY REL & RSET	To reject X or Y mark as indicated in R2/R3 of N71, REJECT pb - push
		To have LGC calculate LOS to star after marking sequence is complete: Key PRO If star code 00, go to step 33; otherwise, go to step 12 if this was first star or go to step 34 if this was second star.	

LM 979A, LM 3166A, LM 3207, LM 3231

CREW-MAN	PNL	PROCEDURES	REMARKS
		4.9.1.2 IMU Realign Program (P52) (cont)	
		20. Lunar Surface Sighting Mark Routine (R59) FL V01 N70 - AOT detent/star code R1 00DSS R2 ----- R3 ----- C - AOT detent code DE - Star/planet code Accept: Key PRO Reject: Key V21E - Load desired codes	 Ref para 4.4.12. Ref para 4.4.8.
		21. Celestial Body Definition Routine (R58) If star/planet code is 00 (planet) (can be used for non-LGC cataloged stars) FL V06 N88 - Celestial body unit position vector components at GET R1 .XXXXX R2 .XXXXX R3 .XXXXX Accept: Key PRO Reject: Key V25E - Load correct position vector components	
		22. Poss FL V05 N09 - Alarm 00404 - Star LOS not within 30° of optical axis for any AOT detent position Accept without acquisition data: Key PRO - Go to step 16 Reject: Key V32E - Recycle to step 12	
		23. FL V06 N79 R1 Cursor angle XXX.XX° R2 Spiral angle XXX.XX° R3 AOT position 0000X X = 1, 2, 3 - Forward positions = 4, 5, 6 - Rear positions Accept: Key PRO Reject: Key V32E - Recycle to step 12	

LM 979A, LM 3166A, LM 3207, LM 3231

CREW-MAN	PNL	PROCEDURES	REMARKS
		4.9.1.2 IMU Realign Program (P52) (cont)	
		24. Sighting Mark Routine (R53) Poss PROG lt - on Key V05 N09E - Call alarm 31207 - NO VAC area for marks 31211 - Illegal interrupt of extended verb Key KEY REL & RSET FL V01 N71 R1 00DSS - AOT detent/star code R2 ----- R3 ----- C - AOT detent code DE - Star/planet code Accept: Key PRO Reject: Key V21E - Load desired codes	Ref para 4.4.12. Ref para 4.4.8.
		25. Celestial Body Definition Routine (R58) If star/planet code is 00 (planet) and Cursor/Spiral option in step 11 (V32E) was selected: (can be used for non-LGC cataloged stars) FL V06 N88 - Celestial body unit position vector components at GET R1 .XXXXX R2 .XXXXX R3 .XXXXX Accept: Key PRO Reject: Key V25E - Load correct position vector components	
		26. FL V52 N71 - Please mark cursor R1 AOT detent/star code 00DSS R2 Cursor marks Z000C R3 Spiral marks Z000S	Maximum value of C or S is 5; additional marks overwrite fifth mark. Z=1 or 0; one, and only one, of the Z's equals 1 at any one time. Z=1 indicates which type of reticle mark or mark reject is enabled. Enable can be switched back and forth by keying ENTR.

LM 979A, LM 3166A, LM 3207, LM 3231

CREW-MAN	PNL	PROCEDURES	REMARKS
		4.9.1.2 IMU Realign Program (P52) (cont)	
	AOT	Reticle cont - center target in cursor To reselect detent/star code: Key V32E - return to step 24 To switch mark reject enable & request spiral marks: Key ENTR - go to step 29 To indicate marks complete: Key PRO - go to step 32 To mark: Key MARK X or MARK Y Poss PROG lt - on To display alarm code: Key V05 N09E - Call alarm 00111 - Mark missing 00112 - Mark or mark reject not being accepted 00113 - No inbits (in channel 17)	To reject cursor marks, key REJECT. Cursor marks may be rejected as long as any remain. DES RATE sw may be used as a backup mark device in event of a MARK X or MARK Y failure.
		27. FL V21 N79 - Load cursor angle R1 Cursor ----- R2 ----- R3 ----- Key XXX.XX°E - cursor angle	To load same CURSOR angle previously loaded KEY V33E or V, PRO
		28. FL V06 N79 - Verify cursor angle R1 Cursor XXX.XX° R2 ----- R3 ----- To reload: Key V21E XXX.XX°E To continue: Key PRO - return to step 26	
		29. FL V53 N71 - Please mark spiral R1 AOT detent/star code 00DSS R2 Cursor marks Z000C R3 Spiral marks Z000S	Maximum value of C or S is 5; additional marks overwrite fifth mark. Z=1 or 0; one, and only one, of the Z's equals 1 at any one time. Z=1 indicates which type of reticle mark or mark reject is enabled. Enable can be switched back and forth by keying ENTR.

CREW-MAN	PNL	PROCEDURES	REMARKS
		4.9.1.2 IMU Realign Program (P52) (cont)	
	AOT	Reticle cont - center target in spiral To reselect detent/star code: Key V32E - return to step 24 To switch mark reject enable & request cursor marks: Key ENTR - return to step 26 To indicate marks complete: Key PRO - go to step 32 To mark: Key MARK X or MARK Y Poss PROG lt - on To display alarm code: Key V05 N09E - Call alarm 00111 - Mark missing 00112 - Mark or mark reject not being accepted 00113 - No inbits (in channel 17)	To reject spiral marks, key REJECT. Spiral marks may be rejected as long as any remain. DES RATE sw may be used as a backup mark device in event of a MARK X or MARK Y failure.
		30. FL V22 N79 - Load spiral angle R1 ----- R2 Spiral ----- R3 ----- Key XXX.XX°E - spiral angle	To load same SPIRAL angle as previously loaded KEY V33E, or V, PRO
		31. FL V06 N79 - Verify spiral angle R1 ----- R2 Spiral XXX.XX° R3 ----- To reload: Key V22E XXX.XX°E To continue: Key PRO - return to step 29	
		32. Poss FL V50 N25 R1 00016 R2 0000X Number of mark data sets rejected during computation (if any) To take more marks: Key ENTR - return to step 24 To continue: Key PRO	Data would be rejected if: a. Star is within 2° of AOT optical axis. b. Star is beyond 28.5° from AOT optical axis. c. More than 28 iterations are required to converge to a solution. d. Sign of iteration step changes more than once.
		33. FL V06 N88 - Components of planet unit position vector If star code 00, go to step 33; otherwise go to step 24, if this was first star, or go to step 34, if this was second star.	Components of planet unit position vector defined at GET in reference coordinates. Components may be computed manually onboard or received from MSFN.

LM 979A, LM 3166A, LM 3231

CREW-MAN	PNL	PROCEDURES	REMARKS
		4.9.1.2 IMU Realign Program (P52) (cont)	
		R1 X .XXXXX R2 Y .XXXXX R3 Z .XXXXX Accept: Key PRO Go to step 12 or step 24 if cursor/spiral if this was first star or Go to step 34 if this was second star Reject: Key V25E - Load desired components	
		34. Sighting Data Display Routine (R54) FL V06 N05 R1 Sighting angle difference XXX.XX° R2 ----- R3 ----- Accept: Key PRO Reject: Key V32E - Go to step 36	N05 is defined as difference between indicated angle (from marks) and actual angle (stored ephemeris data).
		35. Gyro Torquing Routine (R55) FL V06 N93 - Gyro torquing angles R1 X XX.XXX° R2 Y XX.XXX° R3 Z XX.XXX° Accept: Key V76E, PRO Reject: Key V32E - Go to step 36	If GUID CONT sw - PGNS and if either S/C: PGNS sw - AUTO or if V77 (rate command) is in effect and S/C: PGNS sw - ATT HOLD, DAP will maneuver LM to follow IMU as it moves. PRO allows gyro torquing to be performed before step 36.
		36. FL V50 N25 - Checklist reference R1 00014 - Perform fine align R2 ----- R3 ----- Accept: Key PRO - Go to step 11 Reject: Key ENTR	
		37. FL V37 N-- Key XXE, V77E	Select desired program.
	11	38. Remove power from AOT as desired: CB/AC BUS A: AOT LAMP - open CB/AC BUS B: AOT LAMP - open	

CREW-MAN	PNL	PROCEDURES	REMARKS
		4.9.1.3 <u>ISS Coarse Align</u>	Purpose of ISS Coarse Align procedure is to align IMU to gimbal angles specified by astronaut.
		1. Key V41 N20E Poss OPR ERR lt - on (if any other extended verb is active or if gyro torquing or mode switching is in process) Exit V41 N20, Key RSET	
		2. FL V21 N22 - Load CDU angles R1 OG XXX.XX° R2 IG XXX.XX° R3 MG XXX.XX° To continue: Load desired CDU angles To terminate: Key V34E	All registers initially blank; therefore, V33E option in response to display should not be used because it will cause coarse align to angles that are probably not known to astronaut.
		3. V41 - Coarse-align CDU's Exit if ISS turn-on or caging is in process (with or without NO ATT lt - on). NO ATT lt - on NO DAP lt - on Exit, if PROG lt - off	NO ATT lt remains on after gimbals have been driven to specified angles. Light may be extinguished and coarse-align mode terminated by V40 N20E (Zero CDU's, para 4.6.1.21) or V42E (Torque Gyros, para 4.9.1.4).
		Poss PROG lt - on Key V05 N09E - Call alarm 00211 - Coarse align error (not within 2° of desired angles) If ISS malfunction is not indicated, compare actual with desired gimbal angles: Key V16 N22E - Desired ICDU angles R1 OG XXX.XX° R2 IG XXX.XX° R3 MG XXX.XX° Key N20E - ICDU angles R1 OG XXX.XX° R2 IG XXX.XX° R3 MG XXX.XX° Reselect coarse align: Key KEY REL & RSET	

LM 3231

CREW-MAN	PNL	PROCEDURES	REMARKS
		4.9.1.4 Torque Gyros	Purpose of Torque Gyros procedure is to fine-align stable member by torquing gyros. Care should be taken to avoid middle gimbal angles >70° (no programmed test for middle gimbal angles before torquing).
		LGC Power-Up (required)	Ref para 4.6.1.1.
		IMU Power-Up (LGC Operating) (required)	Ref para 4.6.1.3. ISS should be on 15 minutes before thrusting maneuver.
		1. To load Δ gyro angles > +99.999°, load three double precision LGC registers:	Loading angles >90° is intended for ground use only. Bit 14 of high-order word represents 180°; bit 13, 90° etc.
		Key V21 N01E 02737E XXXXXE N15E XXXXXE, E YYYYYE, E YYYYYE, E ZZZZZE, E ZZZZZE Otherwise: Go to step 2.	Maximum negative gyro torquing angle is 37777, 37743; maximum positive gyro torquing angle is 40000, 40034. Any angle > maximum will produce commanded torquing angle of zero. Middle gimbal angle should be <70°.
		2. Key V42E Poss OPR ERR lt - on Exit V42, Key RSET	OPR ERR lt - on if another extended verb from R76 is active or if mode switching or gyro torquing is in process.
		3. FL V21 N93 - Δ gyro angles R1 X XX.XXX° R2 Y XX.XXX° R3 Z XX.XXX° If step 1 not performed: Load desired Δ gyro angles If step 1 performed: Key V33E only if gyro torquing registers loaded before keying V42E.	All registers initially blank. If GUID CONT sw - PGNS and if either S/C: PGNS sw - AUTO or if V77 (rate command) is in effect and S/C: PGNS sw - ATT HOLD, DAP will maneuver LM to follow IMU as it moves. Middle gimbal angle should be <70°.
		4. V42 - Fine align	
		5. NO ATT lt - off (if on previously)	

ALIGN

CREW-MAN	PNL	PROCEDURES	REMARKS
		4.9.1.4 Torque Gyros (cont) 6. Key V16 N93E Monitor Δ gyro angles countdown to zero during torquing. Key KEY REL or Perform step 7 7. Alternative monitor procedure: Key V16 N20E - Monitor gimbal angles during torquing R1 OG XXX.XX° R2 IG XXX.XX° R3 MG XXX.XX° Key KEY REL	As each axis is torqued (in Y, Z, X sequence), data displayed in N93 for that axis is divided by 64 and counted down.

LM 3231

CREW-MAN	PNL	PROCEDURES	REMARKS
		4.9.1.5 Docked Manual IMU Coarse Alignment	
		LGC Power-Up (required)	Ref para 4.6.1.1.
		IMU Power-Up (LGC Operating) (required)	Ref para 4.6.1.3. ISS should be on 15 minutes before thrusting maneuver.
		1. Request CSM select narrow deadband attitude hold in attitude convenient for manual transfer coarse alignment.	
		2. Request docking interface roll calibration angle (Δ ∅).	
		3. Request & record present CSM ICDU angles.	
		4. Calculate & record LM ICDU angles: LM — CSM (Y) OG = ± Δ ∅-OG-60° (P) IG = IG ± 180° (R) MG = -MG	
		5. Key V41 N20E - Coarse-align ICDU Poss OPR ERR lt - on Exit V41 N20, key RSET FL V21 N22 R1 OG XXX.XX° R2 IG XXX.XX° R3 MG XXX.XX° Load desired CDU angles. V41 - Coarse-align (CDU's)	OPR ERR lt - on if another extended verb from R76 is active or if mode switching or gyro torquing is in process.
		6. NO ATT lt - on Poss PROG lt - on Key V05 N09E - Call alarm 00211 - Gimbals did not drive to desired angles Key KEY REL & RSET Reselect coarse align, step 5	
		7. Key V16 N20E - Monitor ICDU coarse alignment R1 OG XXX.XX° R2 IG XXX.XX° R3 MG XXX.XX°	

LM 3231

CREW-MAN	PNL	PROCEDURES	REMARKS
		4.9.1.5 Docked Manual IMU Coarse Alignment (cont)	
		Record final LM ICDU angles Key KEY REL	
		8. Perform ICDU Zero procedure	Ref para 4.6.1.21.
		9. Request & record 18 reference stable member matrix (REFSMMAT) values from CSM.	
		10. Key V21 N01E 1731E	Use LGC Update Program (P27) as alternative method of loading REFSMMAT. Index value, 24 (octal); ECADR is 1731.
		Key first component XXXXXE Key N15E, second component XXXXXE, E Key third component XXXXXE, E Key fourth through 18th component -----E, E	
		11. Procedure for setting REFSMFLG: Key V25 N07E R1 77E R2 10000E R3 1E	Setting REFSMFLG indicates to LGC that REFSMMAT is valid. REFSMMAT defines IMU orientation in inertial space.
		4.9.1.6 Crescent Alignment of PGNCS (IMU)	Purpose of this procedure is to align PGNCS (IMU) in contingency situation, using either AOT, LPD, or COAS, to earth's crescent. Assumptions: (1) LGC and IMU are capable of operation and (2) vehicle configuration may be LM/CSM or LM/CM.
		Appropriate CB activation (required)	Ref para TBD.
		LGC Power-Up (required for steps 5 thru 10)	Ref para 4.6.1.1.
		IMU Power-Up (LGC Operating) (required if LGC Powered up)	Ref para 4.6.1.3.
	1/2	1. Establish PGNCS total attitude display: ATTITUDE MON sw - PGNS ORDEAL: FDAI 1 sw - INRTL FDAI 2 sw - INRTL	Ref para 4.5.3.1.

CREW-MAN	PNL	PROCEDURES	REMARKS
		4.9.1.6 Crescent Alignment of PGNCS (IMU) (cont)	
		2. Select desired optical system: a. COAS - install in CDR's window	
	11	CB FLT DISP: COAS - close	
	8	COAS sw - FWD	
	AOT	b. Azimuth cont - F	
	11	CB HTR: AOT - close CB/AC BUS B: AOT LAMP - close	
		c. LPD reference axis	
		3. Maneuver to acquire earth in optical systems field of view.	Either LM or CSM may maneuver if docked. This procedure requires no restriction on means of maneuvering.
		4. Maneuver to align reference line along & intersecting points of crescent. If LGC is not available (i.e., turned off or failed), go to step 11.	MSFN will update desired +X-axis direction to be either toward, or away from, sun. See diagrams below, which imply use of AOT and COAS. 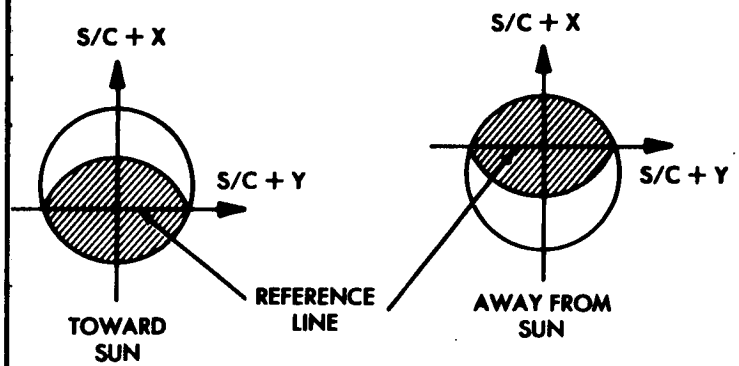 300LM8-2061
		5. Key V41 N20E - Coarse-align ICDU FL V21 N22 Key required data	Data may be: a. COAS: CDR window - 0°, 0°, 0° b. AOT (Azimuth cont - F): 0°, 315°, 0° Verb 41 noun 20 uses coarse align relay, which remains energized until released by step 7. (IMU is fixed with respect to LM body.)

CREW-MAN	PNL	PROCEDURES	REMARKS
		4.9.1.6 Crescent Alignment of PGNCS (IMU) (cont)	
		6. If further accuracy is required: Key V41 N20E, V33E	
		7. Key V40 N20 Verify reference line is properly aligned. Key ENTR Wait 15 sec before keying V37.	
		8. Set REFSMMAT flag: Key V25 N07E 77E 10000E 1E	MSFN may request that REFSMMAT be uplinked and subsequent P52 (IMU Realign Program) option 3 be performed.
		9. Set DRIFT flag: Key V37E 51E PRO V37E 00E	
		10. If AGS is operational & AGS alignment is desired: Key DEDA C 400+30000E If LGC is available, skip steps 11 & 12.	
	11	11. CB PGNS: IMU STBY - close (verify) IMU OPR - close Wait 90 sec.	Energizes IMU cage relay and initiates gyro spin-up. Allows gyros to come up to speed.
	3	12. S/C: IMU CAGE sw - ON (momentarily)	Releases platform at present vehicle orientation.
		4.9.1.7 LM IMU Alignment to CSM Gyro Display Coupler (GDC)	Purpose of this procedure is to provide steps to be taken in contingency situation, for aligning LM IMU to CSM GDC. Assumptions: (1) LGC and IMU are capable of operation and (2) vehicle configuration may be LM/CSM or LM/CM.
		Appropriate CB activation (required)	Ref para TBD.
		LGC Power-Up (required)	Ref para 4.6.1.1.
		IMU Power-Up (LGC Operating) (required)	Ref para 4.6.1.3.

CREW-MAN	PNL	PROCEDURES	REMARKS
		4.9.1.7 LM IMU Alignment to CSM Gyro Display Coupler (GDC) (cont)	
	1/2	1. Establish PGNCS total attitude display: ATTITUDE MON sw - PGNS ORDEAL: FDAI 1 sw - INRTL FDAI 2 sw - INRTL	Ref para 4.5.3.1.
		2. Request CSM go to minimum deadband attitude hold. Request & copy CSM GDC ATT SET dials (R, P, Y).	
		3. Calculate LM ICDU angles: LM (OG) = 300° + Δ ϕ - CM (R) LM (IG) = 180° + CM (P) LM (MG) = 360° - CM (Y)	Δ ϕ = CSM roll index docking angle.
		4. Key V41 N20E FL V21 N22-Load calculated LM angles from step 3.	Coarse-aligns LM IMU to input angles.
		5. Key V41 N20E, V33E	Increases accuracy of coarse alignment.
		6. Key V40 N20 Verify CSM at proper attitude Key ENTR	Releases LM IMU.
		7. Notify CSM that minimum deadband attitude hold is no longer required.	
		8. Set REFSMMAT flag: Key V25 N07E 77E 10000E 1E	
		9. Set DRIFT flag: Key V37E 51E PRO V37E 00E	
		10. If desired, request MSFN uplink REFSMMAT.	Allows P52 (IMU Realign Program) option 3 to be performed with automatic optics.

CREW-MAN	PNL	PROCEDURES	REMARKS
		4.9.2 AGS	
		4.9.2.1 PGNCS/AGS Align	
		AGS Power-Up (required)	Ref para 4.6.2.1.
		AGS Checkout (desired)	Ref para 4.6.2.4.
		LGC Power-Up (required)	Ref para 4.6.1.1.
		IMU Power-Up (LGC Operating) (required)	Ref para 4.6.1.3. ISS should be on 15 minutes before thrusting maneuver.
		AGS Initialization Routine (R47) (required)	Must be repeated when PGNS is aligned to new inertial reference (ref para 4.6.1.18).
		1. Exercise ICDU fine-align switches:	This step eliminates possibility that transients resulting from actuation of ICDU fine-align switches will degrade performance of AGS alignment to PGNCS IMU and prevents possibility of a coarse align transient jeopardizing AGS ability to achieve clear pericynthion in event of AGS abort from lunar surface.

CREW-MAN	PNL	PROCEDURES	REMARKS
		4.9.2.1 PGNCS/AGS Align (cont)	
		a. Establish attitude control mode:	
		(1) AGS attitude hold/rate command -	Ref para 4.5.1.6.
	1	GUID CONT sw - AGS	
	3	S/C:	
		AGS sw - ATT HOLD	
		ROLL, PITCH, & YAW sw - MODE CONT	
		DEAD BAND sw - MAX	
	1	ENG THR CONT: BAL CPL sw - ON	
		(2) PGNCS attitude hold/rate command -	Ref para 4.5.1.3.
		GUID CONT sw - PGNS	
	3	S/C:	
		PGNS sw - ATT HOLD	
		ROLL, PITCH, & YAW sw - MODE CONT or PULSE	
		(3) During docked flight, request that CSM maintain attitude hold. Establish attitude control mode -	
		AGS pulse:	Ref para 4.5.1.7.
	1	GUID CONT sw - AGS	
	3	S/C: AGS sw - AUTO or ATT HOLD	
		ROLL, PITCH, & YAW sw - PULSE	
	1	ENG THR CONT: BAL CPL sw - ON	
		AGS direct:	Ref para 4.5.1.8.
		GUID CONT sw - AGS	
	3	S/C: AGS sw - AUTO or ATT HOLD	
		ROLL, PITCH, & YAW sw - DIR	
		ENG THR CONT: BAL CPL sw - ON	
		PGNCS minimum impulse:	Ref para 4.5.1.4.
	1	GUID CONT sw - PGNS	
	3	S/C: PGNS sw - ATT HOLD	
		ROLL, PITCH, & YAW sw - MODE CONT	
		Key V76E	
		No DAP lt - on	
		(4) On lunar surface, go to step 1d.	
		b. Monitor ICDU angles:	ICDU angles correspond to following LM rotations:
		Key V16 N20E	R1 OGA - Yaw
		R1 OGA XXX.XX°	R2 IGA - Pitch
		R2 ICA XXX.XX°	R3 MGA - Roll
		R3 MGA XXX.XX°	
		If all three registers read >11.25°, go to step 1d.	

CREW-MAN	PNL	PROCEDURES	REMARKS
		4.9.2.1 PGNCS/AGS Align (cont)	
		c. Obtain desired ICDU angles: If undocked, maneuver LM via ACA until all three DSKY registers read >11.25°	
		d. Perform ICDU Zero.	Ref para 4.6.1.21.
		2. Command PGNCS/AGS Align: Key DEDA C 400+30000E	
		3. Verify alignment complete: Key DEDA C 400R	+00000 should appear within 2 seconds after step 2.
		4. Verify alignment accuracy:	
		a. In flight	
		(1) Establish AGS total attitude display on one FDAI- ATTITUDE MON sw - AGS ORDEAL: FDAI 1 sw - INRTL FDAI 2 sw - INRTL	Ref para 4.5.3.3.
		(2) Establish PGNS total attitude display on other FDAI	Ref para 4.5.3.1.
		(3) Compare total attitude display of FDAI's. FDAI's should agree within 2°.	
		b. Lunar surface	
		(1) Key DEDA C 132R + ABCDE (octal)	
		(2) Repeat steps 2, 3, & 4b(1).	
		(3) If D of address 132 changes more than two octal digits, repeat PGNCS/AGS Align procedure.	
		4.9.2.2 Backup AGS Alignment (Using AGS Body-Axis Alignment and PGNS IMU)	This procedure is to be used if, for any reason, PGNCS alignment cannot be transferred to AGS via CDU.
		DAP Data Load Routine (required) (minimum deadband)	Ref para 4.6.1.8.
		AGS Power-Up (required)	Ref para 4.6.2.1.
		AGS Checkout (required)	Ref para 4.6.2.4.
		LGC Power-Up (required)	Ref para 4.6.1.1.
		IMU Power-Up (LGC Operating) (required)	Ref para 4.6.1.3.

CREW-MAN	PNL	PROCEDURES	REMARKS
		4.9.2.2 Backup AGS Alignment (Using AGS Body-Axis Alignment and PGNS IMU) (cont)	
		IMU Orientation Determination Program (P51) (required)	Ref para 4.9.1.1.
		1. Perform Crew-Defined Maneuver Routine (R62) to zero outer, inner, and middle gimbal angles of IMU (N22).	Ref para 4.6.1.9.
		2. Command body-axis alignment: Key DEDA C 400+50000E	
		3. Terminate alignment: Key DEDA C 400+00000E	
	1,2	4. Verify alignment accuracy: a. Establish AGS total attitude display mode on one FDAI- ATTITUDE MON sw - AGS ORDEAL: FDAI 1 sw - INRTL FDAI 2 sw - INRTL b. Establish PGNCS total attitude display mode on other FDAI- ATTITUDE MON sw - PGNS c. Compare total attitude display of FDAI's. FDAI's should agree within 2°.	Ref para 4.5.3.1.
		4.9.2.3 Backup AGS Alignment (Using AGS Body-Axis Alignment and AOT)	
		AGS Power-Up (required)	Ref para 4.6.2.1.
		AGS Checkout (desired)	Ref para 4.6.2.4.
		AGS Total Attitude Display	Ref para 4.5.3.3.
		Communications Basic (required - near earth)	Ref para 4.13.2.1.
		or S-Band Steerable Antenna Activation (High Power) (required - lunar distance)	Ref para 4.2.20.
		Rendezvous Radar antenna in AOT position (desired)	Rendezvous Radar Coarse Align (para 4.6.3.3).
	11	1. CB HTR: AOT - close	AOT heater should be turned on at least 25 minutes before selecting this procedure, to prevent fogging of AOT lens.
		CB/AC BUS A: AOT LAMP - close	CB/AC BUS B: AOT LAMP and CB/AC BUS A: AOT LAMP are redundant. If a-c bus A loading is large, CB/AC BUS B: AOT LAMP can be closed. Never close both cb's at same time.

LM 979A, LM 3207

CREW-MAN	PNL	PROCEDURES	REMARKS
		4.9.2.3 Backup AGS Alignment (Using AGS Body-Axis Alignment and AOT)(cont)	
	AOT	RETICLE BRIGHTNESS cont - adjust Azimuth cont - F	
		2. Determine star pair <30° apart. Record.	Stars must be included in RTCC list (data stored in RTCC memory). Spread between chosen stars should be as close to 30° as practicable.
	3 1	3. Center prime star in AOT: S/C: AGS sw - ATT HOLD ROLL, PITCH, & YAW sw - MODE CONT DEAD BAND sw - MIN GUID CONT sw - AGS ENG THR CONT: BAL CPL sw - ON ACA - maneuver LM to bring prime star to center of reticle	
		4. Rotate reticle to place ±X-line or ±Y-line on second star. Record AOT ind - XXX.X° & line identification.	Because of restrictions on AEA computations, LM Y-axis must be >10° from LM orbit plane.
		5. Perform body-axis align: Key DEDA C 400+50000E Immediately key DEDA C 400+00000E	 Body-axis align. Release align (attitude hold).
		6. Report recorded data to MSFN.	LM must be within LOS of MSFN at time of report.
		7. Poss new FDAI attitude angles provided by MSFN: ACA - maneuver as required Key DEDA C 400+50000E Key DEDA C 400+00000E	 AGS Attitude Hold/Rate Command (para 4.5.1.6).
		8. Reinitialize LM & CSM state vectors.	AGS manual LM/CSM State Vector Update (para 4.6.2.7 and 4.6.2.9). If LGC portion of PGNCS is usable, uplink AGS state vectors to LGC via P27 (para 4.6.1.7) and perform AGS Initialization Routine (R47) (para 4.6.1.18).

LM 3231

CREW-MAN	PNL	PROCEDURES	REMARKS
		4.9.2.4 Crescent Alignment of AGS (ASA)	Purpose of this procedure is to align AGS (ASA) in contingency situation, using either AOT, LPD, or COAS, to earth's crescent. Assumptions: (1) AEA and ASA are capable of operation and (2) vehicle configuration may be LM/CSM or LM/CM.
		Appropriate CB activation (required)	Ref para TBD.
		AGS Power-Up (required)	Ref para 4.6.2.1.
		AGS Checkout (desired)	Ref para 4.6.2.4.
	1/2	1. Establish AGS total attitude display: ATTITUDE MON sw - AGS ORDEAL: FDAI 1 sw - INRTL FDAI 2 sw - INRTL	Ref para 4.5.3.3.
	11 8 AOT 11	2. Select desired optical system: a. COAS - install in CDR's window CB FLT DISP: COAS - close COAS sw - FWD b. Azimuth cont - F CB HTR: AOT - close CB/AC BUS B: AOT LAMP - close c. LPD reference axis	
		3. Maneuver to acquire earth in optical systems field of view.	Either LM or CSM may maneuver if docked. This procedure required no restriction on means of maneuvering.
		4. Maneuver to align reference line along & intersecting points of earth's crescent.	MSFN will update desired +X-Axis direction to be either toward, or away from, sun. See diagrams below, which imply use of AOT or COAS. 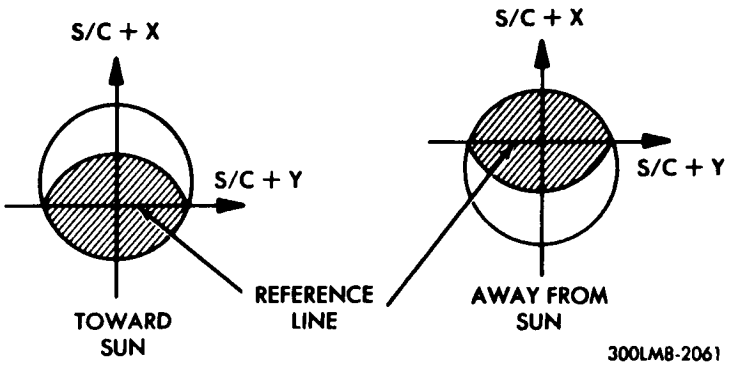

CREW-MAN	PNL	PROCEDURES	REMARKS
		4.9.2.4 Crescent Alignment of AGS (ASA) (cont)	
		5. Key DEDA C 400+50000E C 400+00000 (verify attitude) ENTR	Releases ASA platform.
		6. If AOT is used: Pitch up 45° on FDAI. Key DEDA C 400+50000E followed immediately by C 400+00000E	
		4.9.2.5 AGS Alignment to CSM Gyro Display Coupler or CSM Primary System	Purpose of this procedure is to provide steps to be taken in contingency situation, for aligning AGS (ASA) to orientation defined by either CSM IMU or GDC. Assumptions: (1) AEA and ASA are capable of operation, (2) vehicle configuration may be LM/CSM or LM/CM, and (3) CSM will perform any maneuvering.
		Appropriate CB activation (required)	Ref para TBD.
		AGS Power-Up (required)	Ref para 4.6.2.1.
	1/2	1. Establish AGS total attitude display: ATTITUDE MON sw - AGS ORDEAL: FDAI 1 sw - INRTL FDAI 2 sw - INRTL	Ref para 4.5.3.3.
	3	2. S/C: ROLL, PTICH, YAW sw - PULSE AGS sw - ATT HOLD	
		3. Request CSM maneuver to: Roll (CSM) = 300° +Δϕ Pitch (CSM) = 180° Yaw (CSM) = 0°	Δϕ = CSM roll index docking angle.
		4. Key DEDA C 400+50000E	Body-axis alignment.
		5. Key DEDA C 400+00000 On CSM mark: Key ENTR	CSM mark will be given when CMP verifies vehicle configuration at proper attitude. If use of AGS External ΔV routine is desired, MSFN will provide state vectors for loading into AEA.

CREW-MAN	PNL	PROCEDURES	REMARKS
		4.9.3 LUNAR SURFACE ALIGNMENT	
		4.9.3.1 PGNCS Lunar Surface Align Program (P57)	Purpose of PGNCS Lunar Surface Align Program (P57) is to align or realign IMU to one of three orientations selected by crew: 1. Preferred 2. REFSMMAT 3. Landing site Program 57 can be used to provide IMU alignment in time-critical emergencies before ascent.
		LGC Power-Up (required)	Ref para 4.6.1.1.
		LGC Self-Test (desired)	Ref para 4.6.1.13.
		IMU Power-Up (LGC Operating) (required)	Ref para 4.6.1.3. ISS should be on 15 minutes before thrusting maneuver.
		Rendezvous radar antenna in AOT position (desired)	Rendezvous Radar Coarse Align (para 4.6.3.3).
	11	1. Verify CB HTR: AOT - close	AOT heaters should be turned on at least 25 minutes before selecting this procedure, to prevent fogging of AOT lens.
	11	2. CB/AC BUS A: AOT LAMP - close	CB/AC BUS A: AOT LAMP and CB/AC BUS B: AOT LAMP are redundant. If a-c bus A loading is large, CB/AC BUS B: AOT LAMP can be closed instead. Never close both cb's at same time.
	AOT	RETICLE BRIGHTNESS cont - adjust AOT ind - 000.0° Azimuth cont - F	
		3. Key V37E 57E Poss PROG lt - on Key V05 N09E - Call alarm 00210 - IMU not on Perform IMU Power-Up (LGC Operating) procedure. Key KEY REL & RSET FL V37 N-- Key XXE - Exit P57	Ref para 4.6.1.3.
		4. FL V04 N06 - Option code R1 00001 - Specify IMU orientation R2 00003 - REFSMMAT option R3 -----	Nominal option cannot be selected on lunar surface. If preferred orientation is selected, but one has not been defined, no alarm will result, but alignment will be worthless.

CREW-MAN	PNL	PROCEDURES	REMARKS
		4.9.3.1 PGNCS Lunar Surface Align Program (P57) (cont) R2 1 = Preferred 2 = Nominal 3 = REFSMMAT 4 = Landing site Accept: Key PRO - If R2 = 3 or 1 go to step 6 Reject: Key V22E - Load desired option 5. FL V06 N34 - T (Align) R1 00XXX hr R2 000XX min R3 0XX.XX sec Accept: Key PRO Reject: Key V25E - Load desired T (Align) or all zeros. 6. FL V05 N06 - Option code R1 00010 - Assumed alignment mode R2 00000 - Option (any time) R3 00CD0 - Data code R2 0 - Any time (time critical) 1 = REFSMMAT & Lunar-g determination 2 = Two bodies (star/planet) 3 = One body & lunar-g determination R3 C = 0 - REFSMMAT not defined C = 1 - REFSMMAT defined D = 0 - Stored LM attitude not available D = 1 - Stored LM attitude available. Accept: Key PRO Reject: Key V22E - Load desired option 7. If option code 00000 or 00001 was selected in step 6: Poss FL V05 N09 - Alarm 00701 - Neither present REFSMMAT nor stored LM attitude available Alarm alternatives: a. Key V32E - Recycle to step 6 and select another option or b. Key V34E - Terminate P57 FL V37 N-- Key XXE	Display initialized to contents of N33. If P12 was partially performed after landing, N33 was defined as TIG (AS). If all zeros are accepted, T (Align) is present time.

CREW-MAN	PNL	PROCEDURES	REMARKS
		4.9.3.1 PGNCS Lunar Surface Align Program (P57) (cont)	
		8. If option code 00000 or 00002 was selected in step 6, go to step 11.	
	1/2	9. ATTITUDE MON sw - PGNS	FDAI & N20 (present ICDU angles) are available to monitor IMU changes.
		IMU first position: Desired gimbal angles set at OG = +42°, IG = -42°, MG = +35 1/4° NO ATT lt - on Poss PROG lt - on Key V05 N09E - Call alarm 00211 - Gimbals did not drive to within 2° of desired angles 00217 - Bad return from stall routines Key KEY REL & RSET NO ATT lt - off	NO ATT lt - on while IMU is coarse-aligning to first position. NO ATT lt - off indicates IMU is inertial.
		IMU second position: Calculated, based on vehicle attitude after landing & rotating 180° around gravity vector. Repeat procedure of first position.	Completion of second position alignment completes determination of new gravity vector G.
		10. FL V06 N04 - Gravity error angle R1 XXX.XX° R2 ----- R3 ----- Accept: Key PRO Reject: Key V32E, return to step 9 or Key V34E - Terminate P57 FL V37 N-- Key XXE	Until this step (in first execution of P57), LGC assumes lunar gravity vector to be parallel to LGC's currently stored value of radius-landing site (RLS), the landing site vector, if P68 was previously performed. If P68 was not previously performed, display is meaningless on first pass.
		11. Define this to be first pass. If, in step 6, option code 00002 or 00003 was selected and data code was all zeros, perform steps 12 through 24, otherwise go to step 26; if option code 00000 or 00001 was selected, go to step 26.	
		12. Lunar Surface Sighting Mark Routine (R59) FL V01 N70 - AOT detent/star code R1 OODSS R2 ----- R3 -----	

LM 32

CREW-MAN	PNL	PROCEDURES	REMARKS
		4.9.3.1 PGNCS Lunar Surface Align Program (P57) (cont)	
		C - AOT detent code DE - Star/planet code Accept: Key PRO Reject: Key V21E - Load desired codes	Ref para 4.4.12. Ref para 4.4.8.
		13. Celestial Body Definition Routine (R58) If star/planet code is 00 (planet) (can be used for non-LGC cataloged stars) FL V06 N88 - Celestial body unit position vector components at GET R1 .XXXXX R2 .XXXXX R3 .XXXXX Accept: Key PRO Reject: Key V25E - Load correct position vector components	
		14. Poss FL V05 N09 - Alarm 00404 - Star LOS not within 30° of optical axis for any AOT detent position Accept without acquisition data: Key PRO - Go to step 16 Reject: Key V32E - Recycle to step 12	
		15. FL V06 N79 R1 Cursor angle XXX.XX° R2 Spiral angle XXX.XX° R3 AOT position 0000X X = 1, 2, 3 - Forward positions = 4, 5, 6 - Rear positions Accept: Key PRO Reject: Key V32E - Recycle to step 12	
		16. Sighting Mark Routine (R53) Poss PROG lt - on Key V05 N09E - Call alarm 31207 - No VAC area for marks 31211 - Illegal interrupt of extended verb	

ALIGN

CREW-MAN	PNL	PROCEDURES	REMARKS
		4.9.3.1 PGNCS Lunar Surface Align Program (P57) (cont)	
		Key KEY REL & RSET	
		FL V01 N71	
		R1 OODSS - AOT detent/star code	
		R2 -----	
		R3 -----	
		C - AOT detent code	Ref para 4.4.12.
		DE - Star/planet code	Ref para 4.4.8.
		Accept: Key PRO	
		Reject: Key V21E - Load desired codes	
		17. FL V52 N71 - Please mark cursor	Maximum value of C or S is 5; additional marks overwrite fifth mark. Z = 1 or 0, only one of Z's equals 1 at any one time. Z = 1 indicates which type of reticle mark reject is enabled. Enable can be switched back and forth by keying ENTR.
		R1 OODSS - AOT detent/star code	
		R2 cursor marks Z000C	
		R3 spiral marks Z000S	
		Reticle cont - center target in cursor	
		To re-select detent/star code:	
		Key V32E - return to previous step	
		To switch mark reject enable and request spiral marks:	
		Key ENTR - go to step 20	
		To indicate marks complete:	
		Key PRO - go to step 23	
		To MARK:	To reject cursor marks - key REJECT. Cursor marks may be rejected as long as any remain.
		Key MARK X or MARK Y	
		Poss PROG lt - on	
		To display alarm code:	DES RATE sw may be used as a backup for, or in place of, MARK devices.
		Key V05 N09E - Call alarm	
		00111 - Mark missing	
		00112 - Mark or mark reject not being accepted	
		00113 - No inbits (in channel 16)	
		00115 - No marks to reject	
		Key KEY REL & RESET	
		18. FL V21 N79 Load cursor angle	
		R1 Cursor -----	
		R2 -----	
		R3 -----	
		Key XXX.XX°E cursor angle	

LM

CREW-MAN	PNL	PROCEDURES	REMARKS
		4.9.3.1 PGNCS Lunar Surface Align Program (P57) (cont) 19. FL V06 N79 Verify cursor angle R1 Cursor XXX.XX R2 ----- R3 ----- To reload: Key V21E XXX.XX°E To continue: Key PRO - return to step 17 20. FL V53 N71 - Please mark spiral R1 OODSS AOT detent/star code R2 cursor marks Z000C R3 sprial marks Z000S Reticel cont - center target in spiral To reselect detent/star code: Key V32E - return to step 16 To switch mark reject enable and request cursor marks: Key ENTR - return to step 17 To indicate marks complete: Key PRO - go to step 23 To MARK: Key MARK X or MARK Y Poss PROG lt - on To display alarm code: Key V05 N09E call alarm 00111 - Mark missing 00112 - Mark or Mark reject not being accepted 00113 - No inbits (in channel 16) 00115 - No marks to reject Key KEY REL & RESET 21. FL V22 N79 Load spiral angle R1 ----- R2 Spiral ----- R3 ----- Key XXX.XX°E Spiral angle 22. FL V06 N79 Verify spiral angle R1 ----- R2 Spiral XXX.XX° R3 ----- To reload: Key V22E XXX.XX E To continue: Key PRO - return to step 20.	To reject spiral marks - Key REJECT. Spiral marks may be rejected as long as any remain. DES RATE sw may be used as a backup for, or in place of, MARK devices.

ALIGN

CREW-MAN	PNL	PROCEDURES	REMARKS
		4.9.3.1 PGNCS Lunar Surface Align Program (P57) (cont)	
		23. Poss FL V50 N25 R1 00016 R2 0000X Number of mark data sets rejected To take more marks: Key ENTR - return to step 16 To continue: Key PRO	Data would be rejected if: a. Star is within 2° of AOT optical axis b. Star is beyond 28.5° from AOT optical axis c. More than 28 iterations are required to converge on a solution d. Sign of iteration step changes more than once.
		24. Celestial Body Definition Routine (R58) If star/planet code is 00 (planet): FL V06 N88 - Celestial body unit position vector components at GET R1 X .XXXXX R2 Y .XXXXX R3 Z .XXXXX Accept: Key PRO Reject: Key V25E - Load correct position vector components	
		25. Repeat steps 12 thru 24 for second celestial body (if option code 00002 was selected in step 6).	
		26. Poss FL V06 N22 - Desired ICDU angles R1 OG XXX.XX° R2 IG XXX.XX° R3 MG XXX.XX° Key PRO	If gyro torquing angle exceeded 5° and on first pass.
		Poss NO ATT lt - on No DAP lt - on Poss PROG lt - on Key V05 N09E - Call alarm 00211 - Gimbals did not drive to within 2° of desired angles 00217 - Bad return from stall routines Key KEY REL & RSET	NO ATT lt - on while IMU is in coarse-align mode if gyro torquing angle exceeded 5° on any pass.
		NO ATT lt - off No DAP lt - off	NO ATT lt - off indicates IMU is inertial.

LM 3231

CREW-MAN	PNL	PROCEDURES	REMARKS
		4.9.3.1 PGNCS Lunar Surface Align Program (P57) (cont)	
		27. If option code was 00000 in step 6, go to step 32. If this was first pass and option code was 00002 or 00003, perform steps 12 through 24, and define this to be second pass.	
		28. Sighting Data Display Routine (R54) FL V06 N05 R1 Sighting angle difference XXX.XX° R2 ----- R3 ----- Accept: Key PRO Reject: Key V32E - Go to step 32	Sighting angle difference (N05) is defined as difference between indicated angle (from marks) and actual angle (from ephemeris data).
		29. FL V06 N93 - Gyro torquing angles R1 X XX.XXX° R2 Y XX.XXX° R3 Z XX.XXX° Accept: Key PRO Reject: Key V32E - Go to step 32	PRO allows gyro torquing to be performed before step 30. If any torquing angle >5°, LGC will coarse-align IMU.
		30. Poss NO ATT lt - on NO DAP lt - on Poss PROG lt - on Key V05 N09E - Call alarm 00211 - Gimbals did not drive to within 2° of desired angles 00217 - Bad return from stall routines Key KEY REL & RSET NO ATT lt - off NO DAP lt - off	NO ATT lt - on while IMU is in coarse-align mode if gyro torquing angle exceeded 5° on any pass. NO ATT lt - off indicates IMU is inertial.
		31. Deleted	
		32. FL V50 N25 - Checklist reference R1 00014 - Perform fine align R2 ----- R3 ----- Accept fine align: Key PRO - Return to step 11 Reject fine align: If option code was not 00002: Key ENTR or V34E, exit P57 FL V37 N-- Key XXE If option code was 00002: Key ENTR	

CREW-MAN	PNL	PROCEDURES	REMARKS
		4.9.3.1 PGNCS Lunar Surface Align Program (P57) (cont)	
		FL V06 N89 - Computed landing site coordinates R1 Latitude XX.XXX° R2 Longitude/2 XX.XXX° R3 Altitude XXX.XX nm Reject: Key V25E & load desired coordinates Accept option: Key PRO - Update stored RLS, exit P57 Terminate option: Key V34E - Terminate, exit P57 FL V37 N-- Key XXE	
	11	33. Remove power from AOT: CB/AC BUS A: AOT LAMP - open CB/AC BUS B: AOT LAMP - open	

CREW-MAN	PNL	PROCEDURES	REMARKS
		4.9.3.2 AGS Lunar Align (400+40000)	
		CAUTION AGS Lunar Align routine is constrained to a maximum tilt angle of either X or Y body-axis to local horizontal plane of 30°. At higher tilt angles, possible AGS overflow can occur, resulting in incorrect alignment.	Purpose of AGS Lunar Align (400+40000) procedure is to align AGS, using lunar gravity to find local vertical, and stored lunar azimuth angle.
		AGS Power-Up (required)	Ref para 4.6.2.1.
		AEA Self-Test (desired)	Ref para 4.6.2.3.
		1. Receive & enter azimuth correction ($\Delta\delta$) (for corrections $\leq 5°$) or cos δL, sin δL (with $\Delta\delta = 0$) (for corrections $> 5°$), for lunar rotation & CSM plane change from MSFN if available. Key DEDA C 547+XXXXXE (octal) $\Delta\delta$ and/or C 053+XXXXXE (octal) Cos δL and C 047+XXXXXE (octal) Sin δL	
		2. Start lunar align: Key DEDA C 400+40000E	Minimum of 3 minutes is required to perform lunar align. Final lunar align should not be terminated until within ±4 minutes of nominal lift-off time (by keying in C 400+00000E or C 400+10000E). Early exit from lunar align results in alignment error accumulation at rate of approximately 1.5°/hr (lunar rotation rate).
		3. If desired, take star sighting on known star, using AOT, communicate reticle counter values & AOT detent to MSFN as follows: CB/AC BUS A: AOT LAMP - close	CB/AC BUS B: AOT LAMP and CB/AC BUS A: AOT LAMP are redundant. If a-c bus A loading is large, CB/AC BUS B: AOT LAMP can be closed. Never close both cb's at same time.
		Locate known star or planet (known to RTCC) visible through AOT (AOT detent as required). Rotate reticle control to center target in cursor lines, observe reticle counter value, & transmit value to MSFN verbally. Rotate reticle cont to center target in spiral lines, observe reticle control value, & verbally, transmit value to MSFN. Transmit AOT detent position to MSFN verbally.	

CREW-MAN	PNL	PROCEDURES	REMARKS
		4.9.3.2 AGS Lunar Align (400+40000) (cont) CB/AC BUS A: AOT LAMP - open Key DEDA C 400+00000E (attitude hold submode) Repeat steps 1 & 2.	

PARA	TITLE	PAGE
4.10	Thrust	4.10-2
4.10.1	Orbital Thrust	4.10-2
4.10.1.1	DPS Thrust Program (P40) With AGS Followup/In Control	4.10-2
4.10.1.2	APS Thrust Program (P42) With AGS Followup/In Control	4.10-22
4.10.1.3	RCS Thrust Program (P41) With AGS Followup/In Control	4.10-38
4.10.1.4	Thrust Monitor Program (P47)	4.10-49
4.10.1.5	AGS RCS Axis-by-Axis Thrust	4.10-51
4.10.1.6	RCS Burn for Lunar Impact (Unmanned Ascent Stage)	4.10-53
4.10.1.7	Docked DPS Thrust Program (P40) With AGS Followup	4.10-61
4.10.2	Powered Descent	4.10-73
4.10.2.1	Braking Phase Program (P63) With AGS Preparation for Orbit Insertion (410+00000)	4.10-73
4.10.2.2	Approach Phase Program (P64)	4.10-86
4.10.2.3	Landing Phase (ROD) Program (P66)	4.10-88
4.10.2.4	Landing Confirmation Program (P68)	4.10-91
4.10.3	Powered Ascent	4.10-92
4.10.3.1	Powered Ascent Program (P12) With AGS Followup/In Control	4.10-92
4.10.3.2	DPS Abort (LGC, P70, AEA 410+00000)	4.10-106
4.10.3.3	APS Abort (P71, AEA 410+00000)	4.10-116

CREW-MAN	PNL	PROCEDURES		REMARKS
		4.10 THRUST		
		The following procedures include DPS, APS, and RCS thrust, and powered ascent programs arranged in two-column format as separate PGNCS or AGS procedures. Together, PGNCS in the left column and AGS in the right, they provide an integrated PGNCS/AGS procedure; when one computer is in control (PGNCS or AGS), the other is at followup status ready to assume control. PGNCS-controlled, powered descent programs, with the AGS prepared for orbit insertion, are also included in this section.		
		4.10.1 ORBITAL THRUST		
		4.10.1.1 DPS Thrust Program (P40) With ACS Followup/In Control		Do not use this procedure for docked DPS burn. For docked DPS burn, use Docked DPS Thrust Program (P40) With AGS Followup (para 4.10.1.7). Purpose of DPS Thrust Program (P40) With AGS Followup/In Control procedure is to compute preferred IMU orientation and LM attitude for DPS thrust maneuver and to maneuver LM to thrusting attitude. This procedure controls PGNCS/AGS during countdown, ignition, thrusting, and thrust termination. Thrust vector at engine start may not be directed through LM center of gravity; therefore, normal start profile for all descent engine starts is at 10% throttle for 26 seconds to permit corrective gimbaling. If descent engine is started at high thrust, RCS propellant must be used to stabilize vehicle; extreme, momentary unbalance may exceed RCS compensating capability.

LM 3231

CREW-MAN	PNL	PROCEDURES		REMARKS
		4.10.1.1 DPS Thrust Program (P40) With AGS Followup/In Control (cont)		Descent engine must not be operated in throttling range of 60% to 92.5%, where operation of cavitating venturis in flow control valves becomes unpredictable and may cause incorrect fuel-oxidizer mixture ratio. Operation in 60% to 92.5% range will cause excessive engine erosion and early combustion chamber burn-through. Following sequence of procedures may cause problems: 1. P3X, followed by P47, followed by P40, P41, or P42; prethrust computations may be overwritten by P47. To recover: Perform P3X, followed by P40, P41, or P42. 2. Deleted

CREW-MAN	PNL	PROCEDURES		REMARKS
		4.10.1.1 DPS Thrust Program (P40) With AGS Followup/In Control (cont)		
		MPS Basic (Unstaged) (required)	MPS Basic (Unstaged) (required)	Ref para 4.13.3.1.
		ECS Basic (Unstaged) (required)	ECS Basic (Unstaged) (required)	Ref para 4.13.1.1.
		EPS Preparation for DPS Burn (if required)	EPS Preparation for DPS Burn (if required)	Ref para 4.13.4.3.
		DPS Pressurization and Checkout (required)	DPS Pressurization and Checkout (required)	Ref para 4.2.29.
		Communications Basic (required - near earth)	Communications Basic (required - near earth)	Ref para 4.13.2.1.
		S-Band Steerable Antenna Activation (High Power) (required - lunar distance)	S-Band Steerable Antenna Activation (High Power) (required - lunar distance)	Ref para 4.2.20.
		LGC Power-Up (required)		Ref para 4.6.1.1.
		LGC Self-Test (desired)		Ref para 4.6.1.13.
		LGC time valid (required)		LGC/CMC Clock Synchronization Routine (R33) (para 4.6.1.15)
		LGC state vector valid (required)		LGC Update Program (P27) (para 4.6.1.7) or LM Rendezvous Navigation Program (P20) (para 4.8.2.1)
		IMU Power Up (LGC Operating) (required)		Ref para 4.6.1.3. ISS should be on 15 minutes before thrusting maneuver.
		IMU Orientation Determination Program (P51) (required)		Ref para 4.9.1.1.
		DAP Data Load Routine (R03) (required)		Ref para 4.6.1.8. If docked with CSM, KALCMANU maneuver rate loaded in R03 should be 0.5° or 0.2°/second
		Appropriate prethrust program (required)		Ref para 4.7.

CREW-MAN	PNL	PROCEDURES		REMARKS
		4.10.1.1 DPS Thrust Program (P40) With AGS Followup/In Control (cont)		
			AGS Power-Up (required)	Ref para 4.6.2.1.
			AEA Self-Test (desired)	Ref para 4.6.2.3.
			AGS time valid (required)	AGS Manual Absolute Time Initialization procedure (para 4.6.2.6) or AGS Initialization Routine (R47) (para 4.6.1.18)
			AGS LM state vector valid (required)	AGS Initialization Routine (R47) (para 4.6.1.18) or AGS Manual LM State Vector Update/Initialization procedure (para 4.6.2.7) or AGS Manual Rendezvous Radar LM State Vector Update procedure (para 4.8.2.2)
			AGS CSM state vector valid (required)	AGS Initialization Routine (R47) (para 4.6.1.18) or AGS Manual CSM State Vector Update procedure (para 4.6.2.9)
			AGS alignment valid (required)	PGNCS/AGS Align (para 4.9.2.1), Backup AGS Alignment (Using AGS Body-Axis Alignment and PGNS IMU) (para 4.9.2.2), or Backup AGS Alignment (Using AGS Body-Axis Alignment and AOT) (para 4.9.2.3)
			AGS Wb Vector Update (required if mission warrants)	Ref para 4.6.2.15.
			Appropriate prethrust procedure (required)	Ref para 4.7. If AGS TPI search prethrust procedure was used, TPI execute must have been selected subsequent to that procedure.

CREW-MAN	PNL	PROCEDURES		REMARKS
		4.10.1.1 DPS Thrust Program (P40) With AGS Followup/In Control (cont)		
		1. Prepare PQGS for thrust monitoring: PRPLNT QTY MON sw - DES 1 If DES QTY warn lt - on, it can be turned off after ullage settling has been established by cycling PRPLNT QTY MON sw - OFF, then DES 1.	1. Prepare PQGS for thrust monitoring: PRPLNT QTY MON sw - DES 1 If DES QTY warn lt - on, it can be turned off after ullage settling has been established by cycling PRPLNT QTY MON sw to OFF, then DES 1.	PQGS low-level detection circuit will latch up in low-quantity position if sensor probes are not immersed in propellant due to lack of ullage settling. PQGS should be in operation 15 minutes before start of thrust, but should not be operated continuously more than 45 minutes.
		If PGNCS in followup, go to step 6.		
		2. Establish attitude control: GUID CONT sw - PGNS S/C: PGNS sw - AUTO AGS sw - AUTO ROLL, PITCH, & YAW sw - MODE CONT		Ref para 4.5.1.
		3. Establish PGNCS total attitude & attitude rate/error display: ATTITUDE MON sw (1) - PGNS ATTITUDE MON sw (1) - AGS RATE/ERR MON sw (2) - LDG RDR/CMPTR		Ref para 4.5.3.1 and 4.5.3.2.
		4. Enable ACA/TTCA: ACA/4 JET sw (2) - ENABLE TTCA/TRANSL sw (2) - ENABLE THROTTLE/JETS cont (1) - JETS THROTTLE/JETS cont (1) - THROTTLE ENG THR CONT: ATT/TRANSL sw - 4 JETS ACA PROP sw (2) - ENABLE		
		5. Prepare controls for DPS burn: ENG THR CONT: THR CONT sw - as required MAN THROT sw - as required ENG ARM sw - OFF ABORT pb - reset		ENG THR CONT: MAN THROT sw - CDR (SE) when CDR (LMP) THROTTLE/JETS cont - THROTTLE.

CREW-MAN	PNL	PROCEDURES		REMARKS
		4.10.1.1 DPS Thrust Program (P40) With AGS Followup/In Control (cont)		
		ABORT STAGE pb - reset Eng START pb/lt - off Eng STOP pb/lt (2) - reset DES ENG CMD OVRD sw - OFF ENG GMBL sw - ENABLE ENG THR CONT: BAL CPL sw - ON S/C: DEAD BAND sw - MIN CB S/C: DECA PWR - close DES ENG OVRD - close	If AGS in followup, go to step 7.	
			2. Establish attitude control: Key DEDA C 400+00000E GUID CONT sw - AGS S/C: AGS sw - AUTO PGNS sw - AUTO ROLL, PITCH, & YAW sw - MODE CONT	Prevents possible attitude maneuver at 5° and/or 10°/second.
			3. Establish AGS attitude error & total attitude display: ATTITUDE MON sw (1) - AGS ATTITUDE MON sw (1) - PGNS RATE/ERR MON sw (2) - LDG RDR/CMPTR	Ref para 4.5.3.4 and 4.5.3.3.
			4. Enable ACA/TTCA: ACA/4 JET sw (2) - ENABLE TTCA/TRANSL sw (2) - ENABLE THROTTLE/JETS cont (1) - THROTTLE THROTTLE/JETS cont (1) - JETS ENG THR CONT: ATT/TRANSL sw - 4 JETS ACA PROP sw (2) - ENABLE	
			5. Prepare controls for DPS burn: ENG THR CONT: THR CONT sw - MAN MAN THROT sw - as required ENG ARM sw - OFF ABORT pb - reset ABORT STAGE pb - reset Eng START pb/lt - off Eng STOP pb/lt (2) - reset DES ENG CMD OVRD sw - OFF ENG GMBL sw - ENABLE ENG THR CONT: BAL CPL sw - ON S/C: DEAD BAND sw - MIN CB S/C: DECA PWR - close DES ENG OVRD - close	ENG THR CONT: MAN THROT sw - CDR (SE) when CDR (LMP) THROTTLE/JETS cont - THROTTLE.

CREW-MAN	PNL	PROCEDURES	REMARKS
		4.10.1.1 DPS Thrust Program (P40) With AGS Followup/In Control (cont)	
		6. Confirm ullage threshold: Key DEDA C 616R Modify ullage threshold: Key DEDA C 616+000YYE Go to AGS step 9.	Ullage time is 2YY seconds depending on ullage volume. YY is determined from following: Remaining Fuel / 2 Jets (B) / 4 Jets 100% to 25% / 4 / 3 20% / 7 / 5 15% / 8 / 6 10% / 11 / 8 6% / 12 / 8 3% / 13 / 9
		7. Select desired guidance steering: a. Z-axis parallel to CSM orbit plane - Key DEDA C 623+00000E C 400+10000E or b. Z-axis specified by Wb vector Key DEDA C 623+10000E C 400+10000E	
		8. Deleted	
		To switch to AGS: ENG THR CONT: THR CONT sw - MAN CB S/C: AEA (pnl 11) - close Go to AGS step 9.	To switch to PGNCS: GUID CONT sw - PGNS Go to PGNCS step 6.

CREW-MAN	PNL	PROCEDURES	REMARKS
		4.10.1.1 DPS Thrust Program (P40) With AGS Followup/In Control (cont)	
		6. Select P40: Key V37E 40E	Do not select P40 if VG ≤45000/ weight, to avoid main engine burn of 0.01 second, which may cause DPS helium/fuel heat exchanger freeze-up.
		Poss FL V05 N09 - Alarm 01706 - Loaded LM configuration indicates DPS staged PROG lt - on Key V34E & RSET FL V37 N-- Key XXE - Exit P40 Poss PROG lt - on Key V05 N09E - Call alarm 00210 - IMU not operation	Perform IMU Power-Up (LGC Operating) procedure (para 4.6.1.3).
		00220 - ISS orientation not known	Perform IMU Orientation Determination Program (P51) (para 4.9.1.1).
		Key KEY REL & RSET FL V37 N-- Key XXE - Exit P40	To obtain optional display of VG (LV): Key V06 N86E R1 X XXXX.X fps R2 Y XXXX.X fps R3 Z XXXX.X fps LGC sets attitude errors to zero at this time.
		7. Attitude Maneuver Routine (R60) FL V50 N18 - Perform automatic maneuver to final FDAI angles R1 Roll XXX.XX° R2 Pitch XXX.XX° R3 Yaw XXX.XX°	Automatic attitude maneuvers are more efficient (i.e., propellant-time product is lower) than manual attitude maneuvers. If final computed FDAI angles result in ±90° yaw, transformation from IMU to FDAI angles in roll and pitch is indeterminate and R1 and R2 will be zero.

CREW-MAN	PNL	PROCEDURES		REMARKS
		4.10.1.1 DPS Thrust Program (P40) With AGS Followup/In Control (cont)		
		If desired, before continuing R60, crew may alter values of parameters DVTHRUSH, DVCNTR, TDECAY+1 as follows: Key V21 N01E (01250E, 03515E, or 03741E, respectively), (new data)E		Decision to alter these values and desired new values would be coordinated with, and received from, MSFN. Some or all values are octal and complemented values.
		If PGNCS in followup: Key ENTR, exit R60, go to PGNCS step 9.		
		Accept automatic attitude maneuver: GUID CONT sw - PGNS S/C: PGNS sw - AUTO Key PRO - Go to step 8		Automatic trim maneuver is considered essential for maneuvers to thrusting attitude.
		Reject alternatives (exit R60 via 7c): a. Perform manual attitude maneuver: Select desired attitude control mode - ACA - maneuver manually Key PRO - Return to beginning of step 7 b. To recompute gimbal angles: S/C: PGNS sw - ATT HOLD Key PRO - Return to beginning of step 7 c. When present attitude is satisfactory: Null AGS yaw attitude error. Monitor yaw attitude error on FDAI error needle. ACA - null yaw error (X-axis override) S/C: PGNS sw - AUTO Key ENTR - Exit R60, go to step 8A		Ref para 4.5.1. With AGS guidance steering, AGS orients LM Z-axis in specified direction, PGNCS R60 does not drive LM Z-axis to any specified orientations; therefore, PGNCS-to-AGS switchover could result in large yaw excursion. Consider FDAI attitude error needles as fly-to needles. Needles can be nulled by flying from them. However, this results in false null and switchover to AGS will result in 180° yaw maneuver.

LM 3150

CREW-MAN	PNL	PROCEDURES		REMARKS
		4.10.1.1 DPS Thrust Program (P40) With AGS Followup/In Control (cont)		
		8. If PGNCS automatic attitude maneuver selected: DSKY displays are blanked until completion of automatic maneuver. Monitor FDAI belly band, with respect to color band on roll bezel, to avoid gimbal lock.		If desired, Key extended verbs or Key V16 N18 - Final FDAI angles R1 Roll XXX.XX° R2 Pitch XXX.XX° R3 Yaw XXX.XX° Key KEY REL Belly band covers separation between hemispheres of FDAI ball. Belly band, in color bands on each side of FDAI roll bezel, would indicate IMU middle gimbal angle $\geq$ 75°.
		Monitor return of preceding display, indicating automatic maneuver is complete. To stop LM motion if gimbal lock is approached: S/C: PGNS sw - ATT HOLD		During this maneuver, LGC will terminate automatic maneuver if S/C: PGNS sw is switched out of AUTO.
		If manual override & completion of attitude maneuver desired: Select desired attitude control mode ACA - maneuver manually		Ref para 4.5.1.
		Return to step 7.		
			9. Perform AGS Orientation to Initial Computed Steering Attitude.	Refer para 4.6.2.13.
		To switch to AGS: GUID CONT sw - AGS S/C: AGS sw - AUTO ENG THR CONT: THR CONT sw - MAN CB (11) S/C: AEA - close Go to AGS step 10.		

THRUST

CREW-MAN	PNL	PROCEDURES		REMARKS
		4.10.1.1 DPS Thrust Program (P40) With AGS Followup/In Control (cont)		
		8A. Poss FL V50 N25 - Checklist reference R1 00203 - Switch to PGNCS automatic mode R2 ----- R3 ----- If PGNCS automatic mode desired: GUID CONT sw - PGNS S/C: PGNS sw - AUTO ENG THR CONT: THR CONT - AUTO Key PRO If PGNCS automatic mode was selected: Key ENTR	10. Monitor X-axis component of velocity to be gained: Key DEDA C 500R (0.1/1 fps)	Parenthetical quantization notation: lunar mission/earth mission. Readout will equal total velocity to be gained if LM is properly oriented for DPS burn.
		9. V06 N40 R1 TFI XXBXX min-sec R2 VG XXXX.X fps R3 ΔVm XXXX.X fps CMPTR ACTY lt - on Monitor PROG lt from TFI = -00B50 to -00B35. If PROG lt - on: Key V05 N09E - Call alarm	To switch to PGNS: GUID CONT sw - PGNS ENG THR CONT: THR CONT sw - as desired Go to PGNCS step 9.	TFI is time from DPS ignition in minutes and seconds to nearest second. Sign is - before normal TIG; + after. R3 displays 00000 until TFI = -00B30. V06 N40 displays are blanked from TFI = -00B35 to -00B30. If alarm 01703 occurs, beginning and duration of blanking cannot be defined. CMPTR ACTY lt - on during State Vector Integration Routine (R41). To monitor progress of state vector integration, time (GET) to which state vector integration process has presently calculated state vector is available as follows:

CREW-MAN	PNL	PROCEDURES		REMARKS
		4.10.1.1 DPS Thrust Program (P40) With AGS Followup/In Control (cont)		
		01703 - TIG slipped		Key V16 N38E - TET R1 00XXX hr R2 000XX min R3 0XX.XX sec To terminate display: Key KEY REL TIG will be slipped, as required, to get state vector integration to new TIG -30 seconds.
		Key KEY REL & RSET CMPTR ACTY lt - off		State vector integration complete.
		Update EVNT TMR ind if required.		If alarm 01703 occurs: 1. PGNCS in control and AGS in followup:

THRUST

CREW-MAN	PNL	PROCEDURES		REMARKS
		4.10.1.1 DPS Thrust Program (P40) With AGS Followup/In Control (cont)		AGS solution will not provide expected results if AGS is in orbit insertion or external ΔV guidance modes. If switchover to AGS occurs, effect on expected results will not be large if velocity to be gained is nulled. 2. AGS in control and PGNCS in followup: a. If switchover to PGNCS occurs before burn, proper burn will occur X seconds later. b. If switchover to PGNCS occurs during or after burn, PGNCS will attempt to perform burn X seconds later. Therefore, if AGS remains in control up to ignition time, PGNCS backup capability is lost. c. If EVNT TMR ind is reset per PGNCS procedures and AGS remains in control, results stated in 1, above, will follow. If alarm 01703 occurs, following are recommended: 1. If PGNCS in control and AGS in followup, reset EVNT TMR ind and proceed normally. 2. If AGS in control and PGNCS in followup: a. Reset EVNT TIMR ind and burn X seconds later under AGS control. or b. Switch to PGNCS and burn X seconds later.

CREW-MAN	PNL	PROCEDURES		REMARKS
		4.10.1.1 DPS Thrust Program (P40) With AGS Followup/In Control (cont)		
		10. TTCA - minimum thrust	11. TTCA - minimum thrust S/C: DEAD BAND sw - MIN	
		11. If docked with CSM: Key V65E		Inhibiting X-axis RCS jets during DPS burns is recommended to minimize thermal impingement problems with descent stage and CSM.
		12. When TFI = -00B29: V06 N40 R1 TFI XXBXX min-sec R2 VG XXXX.X fps R3 ΔVm XXXX.X fps Verify ΔVm ≤0.5 fps from TFI = -00B30 to -00B15 If ΔVm >0.5 fps, perform one of following: a. Switch to AGS: GUID CONT sw - AGS ENG THR CONT: THR CONT sw - MAN Go to AGS step 11. or b. If PGNCS in followup or AGS capability not available: Key V37E XXE - Exit P40 If PGNCS in followup, go to PGNCS step 15.	If AGS in followup, go to AGS step 15.	ΔVm >0.5 fps indicates excessive PIPA bias error. Do not Key V37E within approximately 50 microseconds before ullage (if necessary to Key V37E, do it before TIG-10 seconds or after ullage comes on) to avoid continuous ullage with average g off.
		13. If first DPS burn, enable supercritical He pressurization: ED: MASTER ARM sw - ON	12. If first DPS burn, enable supercritical He pressurization: ED: MASTER ARM sw - ON	
		14. When TFI = -00B07 monitor start of ullage.		
		CAUTION DES ENG CMD OVRD sw - OFF ENG THR CONT: ENG ARM sw - DES		If DES ENG CMD OVRD sw is set to ON, engine will start upon arming.

LM 3231

CREW-MAN	PNL	PROCEDURES		REMARKS
		4.10.1.1 DPS Thrust Program (P40) With AGS Followup/In Control (cont)		
			13. When EVNT TMR ind = 00:XX, initiate ullage maneuver: TTCA - move up until DPS start Immediately upon initiation of ullage maneuver, enable AGS eng control & arm descent eng: ABORT pb - push ENG THR CONT: ENG ARM sw - DES	XX = 2YY; YY is initially set to 3, but may be reset in step 6. If redundant engine arming is desired.
		15. When TFI = -00B05: FL V99 N40 - Engine-on enable R1 TFI XXBXX min-sec R2 VG XXXX.X fps R3 ΔVm XXXX.X fps Accept: When ΔVm >XXXX.X fps, Key PRO If PGNS in followup, select accept option, go to PGNCS step 19. Reject alternatives: a. To perform thrust with RCS: Key ENTR, go to PGNCS step 23 ENG THR CONT: ENG ARM sw - OFF ENG GMBL sw - ENABLE or b. Key V34E - Terminate FL V37 N-- Key XXE - Exit P40 ENG THR CONT: ENG ARM sw - OFF ENG GMBL sw - ENABLE		GDA is now fully enabled and will be driven by any ACA and/or AGS attitude error commands. Response to FL V99 N40 should be made as soon as possible to decrease possibility of violating descent stage thermal constraint (approximately 15 seconds). During FL V99 N40, brief FL V06 may appear intermittently; this should be disregarded.

CREW-MAN	PNL	PROCEDURES		REMARKS
		4.10.1.1 DPS Thrust Program (P40) With AGS Followup/In Control (cont)		
		16. If TFI is negative & nonzero: V06 N40 R1 TFI XXBXX min-sec R2 VG XXXX.X fps R3 ΔVm XXXX.X fps		If TFI is not negative and nonzero, DPS engine is commanded on when PRO is keyed in step 15.
		17. When TFI = -00B00, monitor thrust. If no DPS burn: Eng START pb/lt - push	14. When EVNT TMR ind = 00:00, monitor thrust. If no DPS burn: Eng START pb/lt - push	
		CAUTION If DPS burn is manually initiated (eng START pb/lt), automatic eng shutoff will not occur. When shutoff criteria are reached, eng STOP pb/lt - push. Rough combustion may be expected at start of DPS burns due to gas ingestion in propellants. Roughness may last as long as 25 sec, depending on how quickly eng is throttled up. There is no constraint on throttling due to this roughness.		
		18. DPS/APS Thrust Fail Routine (R40) If LGC detects thrust fail: FL V97 NXX - Perform engine fail procedures (noun & registers do not change) R1 XXXXX R2 XXXXX R3 XXXXX Alternatives to fail procedure: a. Verify LGC interpretation of thrust failure. Key PRO b. Attempt completion of maneuver: Key ENTR, return to step 15		R40 is called at ignition time and remains active until engine cutoff. R40 monitors PIPA outputs and initiates engine failure procedures if thrust failure is detected. Engine thrust fails when PIPA detects ΔV of <0.394 fps (12 cm/sec) (docked) or <1.18 fps (36 cm/sec) (undocked) for five consecutive sampling periods of 2 seconds each, after ignition time. Engine thrust also fails if, during thrusting period, ΔV is less than this threshold for two consecutive sampling periods of 2 seconds each. During FL V97 NXX, brief FL V06 may appear intermittently; this should be disregarded.

CREW-MAN	PNL	PROCEDURES		REMARKS
		4.10.1.1 DPS Thrust Program (P40) With AGS Followup/In Control (cont)		
		c. Terminate: Key V34E - Exit P40 FL V37 N-- Key XXE ENG THR CONT: ENG ARM sw - OFF ENG GMBL sw - ENABLE		
		19. V06 N40 R1 TFC XXBXX min-sec R2 VG XXXX.X fps R3 ΔVm XXXX.X fps TFC & VG decreasing, ΔVm increasing: Monitor FDAI. Poss PROG lt - on Key V05 N09E - call alarm 01407 - VG increasing (angle between actual thrust vector and desired thrust vector >90°) Key KEY REL & RSET Terminate burn or go to backup alternative b. If PGNCS in followup, go to PGNCS step 23. Backup alternatives: a. ENG THR CONT: THR CONT sw - MAN TTCA - move up as desired or b. Switch to AGS: GUID CONT sw - AGS ABORT pb - push ENG THR CONT: THR CONT sw - MAN TTCA - move up as desired Go to AGS step 16.	15. Monitor ΔVgx. If AGS in followup, go to AGS step 21.	TFC is discontinuous and ΔVm becomes fairly constant for 4 to 5 seconds. ΔVgx will begin to count-down at engine ignition. If VG is found to be increasing by LGC, engine-off command will not be generated.

CREW-MAN	PNL	PROCEDURES		REMARKS
		4.10.1.1 DPS Thrust Program (P40) With AGS Followup/In Control (cont)		
		20. When EVNT TMR ind = 00:26: a. Manual thrust - TTCA - move up as required b. Automatic thrust - If burn duration >95 sec: ENG THRUST ind - approx 100% CMD THRUST ind - approx 100%	16. When EVNT TMR ind = 00:26: TTCA - move up (maximum)	If burn duration <95 seconds, no-throttle flag is set to inhibit throttle command from going maximum, preventing inaccurate engine-cutoff computations when engine thrust level varies, and entire burn is performed at 10% thrust level. At this time, TFC will start counting down. Manual throttle to approximately 40% after 15 seconds at 10% may be nominal for LM controlled DOI.
		20A. If propellant quantity >29%: DES He REG 1 sw - OPEN; tb - gray		
		21. If first DPS burn: ED: MASTER ARM sw - OFF	17. If first DPS burn: ED: MASTER ARM sw - OFF	Poss MASTER ALARM - on when ED: MASTER ARM sw - OFF due to relay race removing CWEA inhibit.
		21A. When propellant quantity = 29% or At TFC-10 sec (<86%): DES He REG 1 sw - CLOSE; tb - bp		
		22. Monitor thrust cutoff: a. Early cutoff - Return to step 18. b. Late or manual cutoff- Eng STOP pb/lt - push Wait 3 sec ENG THR CONT: ENG ARM sw - OFF Reset eng STOP pb/lt: (1) Release tab - push (2) Eng STOP pb/lt - on.	18. Monitor thrust cutoff when ΔVgx = 00000 fps: a. Late or manual cutoff - Eng STOP pb/lt - push Wait 3 sec ENG THR CONT: ENG ARM sw - OFF ABORT pb - reset Reset eng STOP pb/lt: (1) Release tab - push (2) Eng STOP pb/lt - on	Early cutoff - cutoff has occurred early with respect to computed time of cutoff. Late cutoff - LGC or AEA did not terminate engine burn at computed time of cutoff. Normal cut-off - engine shutdown occurred at computed time of cutoff. ENG THR CONT: ENG ARM sw - OFF removes arming signal to

CREW-MAN	PNL	PROCEDURES		REMARKS
		4.10.1.1 DPS Thrust Program (P40) With AGS Followup/In Control (cont)		
		(3) If eng STOP pb/lt - off, verify that lights are functioning by performing Caution & Warning Array Checkout, steps 3 & 4 (para 4.2.10). If lights are functioning, inadvertent reset has taken place & eng is enabled. Steps (4), (5), & (6) should not be performed.	(3) If eng STOP pb/lt-off, verify that lights are functioning by performing Caution & Warning Array Checkout, steps 3 & 4 (para 4.2.10). If lights are functioning, inadvertent reset has taken place & engine is enabled. Steps (4), (5), & (6) should not be performed.	throttle actuator, causing throttle to move to fully open position. To avoid possible transient thrust surge, pause 3 seconds after pushing Eng STOP pb/lt. This ensures that all engine valves have time to close.

CREW-MAN	PNL	PROCEDURES		REMARKS
		4.10.1.1 DPS Thrust Program (P40) With AGS Followup/In Control (cont)		
		(4) Eng STOP pb/lt - push (5) Release tab - push (6) Eng STOP pb/lt - off ENG GMBL sw - ENABLE	(4) Eng STOP pb/lt - push (5) Release tab - push (6) Eng STOP pb/lt - off ENG GMBL sw - ENABLE	
		c. Normal cutoff - ENG THR CONT: ENG ARM sw - OFF ENG GMBL sw - ENABLE	b. Early or normal cutoff - ABORT pb - reset ENG THR CONT: ENG ARM sw - OFF ENG GMBL sw - ENABLE	
		To switch to AGS: GUID CONT sw - AGS CB (11) S/C: AEA - close Go to AGS step 19.	To switch to PGNCS: GUID CONT sw - PGNS Go to PGNCS step 24.	
		23. If V65 was keyed before: Key V75E		
		24. FL V16 N40 R1 TPC XXBXX min-sec R2 VG XXXX.X fps R3 ΔVm XXXX.X fps Record final thrust parameters Key PRO Record final propellant quantity noted during thrust PRPLNT QTY MON sw - OFF	19. Record final propellant quantity noted during thrust PRPLNT QTY MON sw - OFF	At this time, LGC zeroes attitude error and sets 0.3° deadband in RCS DAP.
		25. FL V16 N85 - VG (LM) R1 X XXXX.X fps R2 Y XXXX.X fps R3 Z XXXX.X fps		
		If PGNS in followup, go to PGNCS step 26.		

CREW-MAN	PNL	PROCEDURES		REMARKS
		4.10.1.1 DPS Thrust Program (P40) With AGS Followup/In Control (cont)		
		If nulling of VG is desired: S/C: PGNS sw - ATT HOLD THROTTLE/JETS cont (CDR) - JETS ACA/TTCA - null VGX, VGY, VGZ		
			20. Trim ΔV residual -	If this trim maneuver is performed after use of orbit insertion routine, it should be performed immediately after engine shutdown. Orbit Insertion routine drives LM to specific point on desired orbit and residual ΔV's will increase naturally after engine shutdown.
			If not in Orbit Insertion (410+00000) select External ΔV: Key DEDA C 410+50000E	
			Verify AEA attitude hold submode: Key DEDA C 400R If +00000 not displayed: Key DEDA C 400+00000E S/C: DEAD BAND sw - MIN	
			Read and record: ΔVgx Key DEDA C 500R (0.1/1 fps) ΔVgy Key DEDA C 501R (0.1/1 fps) ΔVgz Key DEDA C 502R (0.1/1 fps)	
			Read out and null ΔVg residuals in order of magnitude, largest first.	Null ΔVgx by moving TTCA up or down. Up TTCA nulls positive ΔVgx. Null ΔVgy by moving TTCA right or left. Right TTCA nulls positive ΔVgy. Null ΔVgz by moving TTCA in or out. In TTCA nulls positive ΔVgz.
			S/C: DEAD BAND sw - MAX	

LM 3207

CREW-MAN	PNL	PROCEDURES		REMARKS
		4.10.1.1 DPS Thrust Program (P40) With AGS Followup/In Control (cont)		
			21. Read out predicted perifocus altitude: Key DEDA C 403R (0.1 nm) Compare with PGNCS Hp value.	
			22. Read out apofocus altitude: Key DEDA C 315R (0.1 nm) Compare with PGNCS Ha value.	
		26. Terminate P40 or select Orbit Parameter Display Routine (R30): a. Terminate: Key PRO FL V37 N-- Key XXE - Exit P40 or b. Select R30: Key V76E & verify/set NO DAP lt - on S/C: PGNS sw - ATT HOLD to conserve RCS propellant by overriding LGC-selected deadband (0.3°) Key V82E FL V16 N44 R1 Ha XXXX.X nm R2 Hp XXXX.X nm R3 TFF XXBXX min-sec Key PRO when finished with display to reestablish N85 display, Exit R30 Key PRO FL V37 N-- Key XXE - Exit P40		While average g is in process, orbit parameters are automatically recomputed every 2 seconds. At this time, LGC restores crew-specified (R03) deadband limits in RCS DAP.
		27. Turn off ascent batteries: EPS: BAT 5 NORMAL LMP FEED sw - OFF/RESET; tb - bp BAT 6 NORMAL CDR FEED sw - OFF/RESET; tb - bp	23. Turn off ascent batteries: EPS: BAT 5 NORMAL LMP FEED sw - OFF/RESET; tb - bp BAT 6 NORMAL CDR FEED sw - OFF/RESET; tb - bp	
		28. Perform EPS check, Post DPS Burn.	24. Perform EPS check, Post-DPS Burn.	Ref para 4.13.4.4.

LM 3231

CREW-MAN	PNL	PROCEDURES		REMARKS
		4.10.1.2 APS Thrust Program (P42) With AGS Followup/In Control (cont)		Purpose of APS Thrust (P42) with AGS Followup/In Control procedure is to compute preferred IMU orientation and LM attitude for APS thrust maneuver and to maneuver LM to thrusting attitude. This procedure controls PGNCS/AGS during countdown, ignition, thrusting, and thrust termination. Following sequence of procedures may cause problems: 1. P3X, followed by P47, followed by P40, P41, or P42; prethrust computations may be overwritten by P47. To recover: Perform P3X, followed by P40, P41, or P42 2. Deleted
		MPS Basic (Staged) (required)	MPS Basic (Staged) (required)	Ref para 4.13.3.2.
		ECS Prestaging Check (required)	ECS Prestaging Check (required)	Ref para 4.12.7.
		EPS Basic (Staged) (required - if staged)	EPS Basic (Staged) (required - if staged)	Ref para 4.13.4.2.
		EPS Prestaging Check (required - if unstaged)	EPS Prestaging Check (required - if unstaged)	Ref para 4.12.5.
		ED Prestaging Check (desired)	ED Prestaging Check (desired)	Ref para 4.12.6

LM 3231

CREW-MAN	PNL	PROCEDURES		REMARKS
		4.10.1.2 APS Thrust Program (P42) With AGS Followup/In Control (cont)		
		APS Pressurization & Checkout (required)	APS Pressurization & Checkout (required)	Ref para 4.12.3.
		LGC Power-Up (required)		Ref para 4.6.1.1.
		LGC Self-Test (desired)		Ref para 4.6.1.13.
		LGC time valid (required)		LGC/CMC Clock Synchronization Routine (R33) (para 4.6.1.15)
		LGC state vector valid (required)		LGC Update Program (P27) (para 4.6.1.7) or Rendezvous Navigation Program (P20)
		IMU Power-Up (LGC Operating) (required)		Ref para 4.6.1.3. ISS should be on 15 minutes before thrusting maneuver.
		IMU Orientation Determination Program (P51) (required)		Ref para 4.9.1.1.
		DAP Data Load Routine (R03) (required)		Ref para 4.6.1.8. N46 (R1) = 1BCOE recommended
		Appropriate prethrust program (required)		Ref para 4.7.
			AGS Power-Up (required)	Ref para 4.6.2.1.
			AEA Self-Test (desired)	Ref para 4.6.2.3.
			AGS time valid (required)	AGS Manual Absolute Time Initialization procedure (para 4.6.2.6) or AGS Initialization Routine (R47) (para 4.6.1.18)
			AGS LM state vector valid (required)	AGS Initialization Routine (R47) (para 4.6.1.18) or AGS Manual LM State Vector Update/Initialization procedure (para 4.6.2.7) or AGS Manual Rendezvous Radar LM State Vector Update procedure (para 4.8.2.2)

THRUS

CREW-MAN	PNL	PROCEDURES		REMARKS
		4.10.1.2 APS Thrust Program (P42) With AGS Followup/In Control (cont)		
			AGS CSM state vector valid (required)	AGS Initialization Routine (R47) (para 4.6.1.18) or AGS Manual CSM State Vector Update (para 4.6.2.9)
		If PGNCS in followup, go to step 5.	AGS alignment valid (required)	PGNCS/AGS Align (para 4.9.2.1), Back-up AGS Alignment (Using AGS Body-Axis Alignment and PGNS IMU) (para 4.9.2.2), Backup AGS Alignment (Using AGS Body-Axis Alignment and AOT) (para 4.9.2.3), or AGS Lunar Align (para 4.9.3.2)
		1. Establish attitude control: GUID CONT sw - PGNS S/C: PGNS sw - AUTO AGS sw - AUTO ROLL, PITCH, YAW sw - MODE CONT	AGS Wb Vector Update (required if mission warrants) Appropriate prethrust procedure (required)	Ref para 4.6.2.15. Ref para 4.7. If AGS TPI search prethrust procedure was used, TPI execute must have been selected subsequent to that procedure.
		2. Establish PGNCS total attitude & attitude rate/error display: ATTITUDE MON sw (1) - PGNS ATTITUDE MON sw (1) - AGS RATE/ERR MON sw (2) - LDG RDR/CMPTR		Ref para 4.5.3.1 and 4.5.3.2.
		3. Enable ACA/TTCA: ACA/4 JET sw (2) - ENABLE TTCA/TRANSL sw (2) - ENABLE THROTTLE/JETS cont (2) - JETS ENG THR CONT: ATT/TRANSL sw - 4 JETS ACA PROP sw (2) - ENABLE		
		4. Prepare controls for APS burn: ENG THR CONT: ENG ARM sw - OFF ABORT pb - reset ABORT STAGE pb - reset Eng START pb/lt - off Eng STOP pb/lt (2) - reset ENG THR CONT: BAL CPL sw - ON S/C: DEAD BAND sw - MIN CB (11) S/C: AELD - close CB (16) S/C: AELD - close		

CREW-MAN	PNL	PROCEDURES		REMARKS
		4.10.1.2 APS Thrust Program (P42) With AGS Followup/In Control (cont)		
			If AGS in followup, go to AGS step 5.	
			1. Establish attitude control: Key DEDA C 400+00000E GUID CONT sw - AGS S/C: AGS sw - AUTO PGNS sw - AUTO ROLL, PITCH, YAW sw - MODE CONT	Prevents possible attitude maneuver change of 5° and/or 10°/second.
			2. Establish AGS attitude error & total attitude display: ATTITUDE MON sw (1) - AGS ATTITUDE MON sw (1) - PGNS RATE/ERR MON sw (2) - LDG RDR/CMPTR	Ref para 4.5.3.4 and 4.5.3.3.
			3. Enable ACA/TTCA: ACA/4 JET sw - ENABLE TTCA/TRANSL sw (2) - ENABLE THROTTLE/JETS cont (2) - JETS ENG THR CONT: ATT/TRANSL sw - 4 JETS ACA PROP sw (2) - ENABLE	
			4. Prepare controls for APS burn: ENG THR CONT: ENG ARM sw - OFF ABORT pb - reset ABORT STAGE pb - reset Eng START pb/lt - off Eng STOP pb/lt (2) - reset ENG THR CONT: BAL CPL sw - ON S/C: DEAD BAND sw - MIN CB (11) S/C: AELD - close CB (16) S/C: AELD - close Go to AGS step 7.	

CREW-MAN	PNL	PROCEDURES		REMARKS
		4.10.1.2 APS Thrust Program (P42) With AGS Followup/In Control (cont)		
			5. Select desired guidance steering: a. Z-axis parallel to CSM orbit plane: Key DEDA C 623+00000E Key DEDA C 400+10000E or b. Z-axis specified by Wb vector: Key DEDA C 623+10000E Key DEDA C 400+10000E	
			6. Deleted	
			If AGS in followup, go to AGS step 9.	
		To switch to AGS: CB (11) S/C: AEA - close Go to AGS step 8.	To switch to PGNCS, go to PGNCS step 5.	
		5. Key V37E 42E Poss FL V05 N09 - Alarm 01706 - Loaded LM configuration indicates DPS not staged PROG lt - on	7. Confirm ullage threshold: Key DEDA C 616 R Modify ullage threshold: Key DEDA C +0000YE	Do not select P42 if VG ≤45000/ weight. Ullage time is 2Y seconds depending on ullage volume. Y is determined from following: Remaining Fuel / Total Burn Time (sec) / 2 Jets (B) / 4 Jets 100% to 50% / 0 to 228 / 2 / 2 40% / 274 / 4 / 3 30% / 319 / 5 / 4 20% / 365 / 6 / 4 10% / 410 / 7 / 5

LM 999, LM 3231

CREW-MAN	PNL	PROCEDURES		REMARKS
		4.10.1.2 APS Thrust Program (P42) With AGS Followup/In Control (cont)		
		Alternatives: a. To continue: Key PRO & RESET or b. To terminate: Key V34E & RESET		Although DPS has not been staged, staging will occur after TIG-30 seconds and before ignition (when average-g integration is being performed).
		FL V37 N-- Key XXE - Exit P42		
		Poss PROG lt - on Key V05 N09E - Call alarm 00210 - IMU not on 00220 - ISS orientation not known Key KEY REL & RSET FL V37 N-- Key XXE - Exit P42		Perform IMU Power-Up (LGC Operating) procedure (para 4.6.1.3). Perform IMU Orientation Determination Program (P51) (para 4.9.1.1).
		6. Attitude Maneuver Routine (R60) FL V50 N18 - Perform automatic maneuver to final FDAI angles R1 Roll XXX.XX° R2 Pitch XXX.XX° R3 Yaw XXX.XX°		Manual selection of VG(LV) can be performed by following: Key V06 N86E R1 X XXXX.X fps R2 Y XXXX.X fps R3 Z XXXX.X fps At this time, LGC zeroes attitude error and sets 1° deadband in RCS DAP. Automatic attitude maneuvers are more efficient (i.e., propellant-time product is lower) than manual attitude maneuvers. If final computed FDAI angles result in ±90° yaw, transformation from IMU to FDAI angles in roll and pitch is indeterminate and R1 and R2 will be zero.

CREW-MAN	PNL	PROCEDURES		REMARKS
		4.10.1.2 APS Thrust Program (P42) With AGS Followup/In Control (cont)		
		If desired, before continuing R60, crew may alter values of parameters DVTHRUSH, DVCNTR, TDECAY+1 as follows: Key V21 N01E (01250E, 03515E, or 03741E, respectively), (new data)E		Decision to alter these values and desired new values would be coordinated with, and received from, MSFN. Some or all values are octal and complemented values.
		If PGNCS in followup, key ENTR, exit R60, go to PGNCS step 8.	To switch to PGNCS: GUID CONT sw - PGNS Go to PGNCS step 6 & select automatic attitude maneuver.	
		Accept automatic attitude maneuver: GUID CONT sw - PGNS S/C: PGNS Sw - AUTO Key PRO - Go to step 7		Automatic trim maneuver is considered essential for maneuvers to thrusting attitude.
		Reject alternatives (exit R60 via 6c): a. Perform manual attitude maneuver: Select desired attitude control mode ACA - maneuver manually Key PRO - Return to beginning of step 6		Ref para 4.5.1.
		b. To recompute gimbal angles: S/C: PGNS sw - ATT HOLD Key PRO - Return to beginning of step 6		
		c. When present attitude is satisfactory: Null AGS yaw attitude error. Monitor yaw attitude error on FDAI error needle. ACA - null yaw error (X-axis override)		With AGS guidance steering, AGS orients LM Z-axis in specified direction. PGNCS R60 does not drive LM Z-axis to any specified orientation; therefore PGNCS-to-AGS

CREW-MAN	PNL	PROCEDURES		REMARKS
		4.10.1.2 APS Thrust Program (P42) With AGS Followup/In Control (cont)		
		S/C: PGNS sw - AUTO Key ENTR - Exit R60. Go to step 7A		switchover could result in large yaw excursion. Consider FDAI attitude error needles as fly-to needles. Needles can be nulled by flying from them. However, this results in false null and switchover to AGS will result in 180° yaw maneuver.
		7. If PGNCS automatic attitude maneuver selected: DSKY displays are blanked until completion of automatic maneuver. Monitor FDAI belly band, with respect to color band on roll bezel, to avoid gimbal lock.		If desired, Key extended verbs or Key V16 N18 - Final FDAI angles R1 Roll XXX.XX° R2 Pitch XXX.XX° R3 Yaw XXX.XX° Key KEY REL Belly band covers separation between hemispheres of FDAI ball. Belly band, in color bands on each side of FDAI roll bezel, would indicate IMU middle gimbal angle $\geq$ 75°.
		Monitor return of preceding display, indicating automatic maneuver complete. To stop LM motion if gimbal lock is approached: S/C: PGNS sw - ATT HOLD		During this maneuver, LGC will terminate automatic maneuver if S/C: PGNS sw is switched out of AUTO.
		If manual override & completion of attitude maneuver desired: Select desired attitude control mode ACA - maneuver manually Return to step 6.		Ref para 4.5.1.
		7A. Poss FL V50 N25 - Checklist reference R1 00203 - Switch to PGNCS automatic mode R2 ----- R3 -----	8. Perform AGS Orientation to Initial Computed Steering Attitude.	Ref para 4.6.2.13.

CREW-MAN	PNL	PROCEDURES		REMARKS
		4.10.1.2 APS Thrust Program (P42) With AGS Followup/In Control (cont)		
		If PGNCS automatic mode desired: GUID CONT sw - PGNS S/C: PGNS sw - AUTO ENG THR CONT: THR CONT sw - AUTO Key PRO If PGNCS automatic mode was selected: Key ENTR		
		8. V06 N40 R1 TFI XXBXX min-sec R2 VG XXXX.X fps R3 ΔVm XXXX.X fps	To switch to PGNCS: GUID CONT sw - PGNS ENG THR CONT: THR CONT sw - as desired Go to PGNCS step 8.	R3 displays 00000 until TFI = -00B30. V06 N40 displays are blanked from TFI = -00B35 to -00B30. If alarm 01703 occurs, beginning and duration of blanking cannot be defined. To monitor progress of state vector integration, time (GET) to which state vector integration process has presently calculated state vector is available as follows: Key V16 N38E - TET R1 00XXX hr R2 000XX min R3 0XX.XX sec To terminate display: Key KEY REL
		CMPTR ACTY lt - on Monitor PROG lt from TFI = -00B50 to -00B35. If PROG lt - on: Key V05 N09E - Call alarm 01703 - TIG slipped		CMPTR ACTY lt - on during State Vector Integration Routine (R41). TIG will be slipped, as required, to get state vector integration to new TIG -30 seconds.
		Key KEY REL & RSET CMPTR ACTY lt - off		State vector integration complete.
		Update EVNT TMR ind if required.		If alarm 01703 occurs: 1. PGNCS in control and AGS in followup:

CREW-MAN	PNL	PROCEDURES		REMARKS
		4.10.1.2 APS Thrust Program (P42) With AGS Followup/In Control (cont)		
		To switch to AGS: GUID CONT sw - AGS S/C: AGS sw - AUTO CB S/C: AEA (pnl 11) - close Go to AGS step 9.		AGS solution will not provide expected results if AGS is in orbit insertion or external ΔV guidance modes. If EVNT TMR ind is reset and velocity to be gained is nulled, deviation from expected results will not be large. 2. AGS in control and PGNCS in followup: a. If switchover to PGNCS occurs before burn, proper burn will occur X seconds later (under PGNCS control). b. If switchover to PGNCS occurs during or after burn, PGNCS will command engine off and attempt to perform burn X seconds later. Thus, if AGS remains in control up to ignition time and EVNT TMR ind is not reset, PGNCS backup capability is lost. c. If EVNT TMR ind is reset per PGNCS procedure and AGS remains in control, results stated in 1, above, will follow. If alarm 01703 occurs, following are recommended: 1. If PGNCS in control and AGS in followup, reset EVNT TMR ind and proceed normally.

CREW-MAN	PNL	PROCEDURES		REMARKS
		4.10.1.2 APS Thrust Program (P42) With AGS Followup/In Control (cont)		
				2. If AGS in control and PGNCS in followup, reset EVNT TMR ind and burn X seconds later under AGS control, or switch to PGNCS and burn X seconds later.
			9. Monitor X-axis component of velocity to be gained Key DEDA C 500R (0.1/1 fps) S/C: DEAD BAND sw - MIN	Readout will equal total velocity to be gained if LM is properly oriented for burn.
		9. When TFI = -00B29: V06 N40 R1 TFI XXBXX min-sec R2 VG XXXX.X fps R3 ΔVm XXXX.X fps Verify ΔVm ≤0.5 fps from TFI = -00B30 to -00B15 Perform RCS staging if not previously performed If ΔVm >0.5 fps: a. Switch to AGS - GUID CONT sw - AGS S/C: AGS sw - AUTO Go to AGS step 10. b. if PGNCS in followup or AGS capability not available: Key V37E XXE - Exit P42	If AGS in followup, go to AGS step 12.	Parenthetical quantization notation: lunar mission/earth mission. ΔVm >0.5 fps indicates excessive PIPA bias error Ref para 4.12.8 (steps 13-15) Do not Key V37E within approximately 50 microseconds before ullage (if necessary to Key V37E, do it before TIG-10 seconds or after ullage comes on) to avoid continuous ullage with average g off.
		10. When TFI = -00B06, monitor ullage ΔV. FL V99 N40 - Engine-on enable R1 TFI XXBXX min-sec R2 VG XXXX.X fps R3 ΔVm XXXX.X fps ENG THR CONT: ENG ARM sw - ASC Accept: when ΔVm >XXXX.X fps, Key PRO	10. When EVNT TMR ind = 00:XX, initiate ullage maneuver: TTCA - move up until APS start Immediately on ullage initiation: ABORT STAGE pb - push	During FL V99 N40, brief FL V06 may appear intermittently; this should be disregarded. XX = 2Y; Y is initially set to 3 but may be reset in step 7. Ullage time and ΔV depends on real-time ullage volume.

CREW-MAN	PNL	PROCEDURES		REMARKS
		4.10.1.2 APS Thrust Program (P42) With AGS Follow/up In control (cont)		
				Complete protection against effects of single-point failures, which would cause engine to start as soon as it is armed, is not achieved unless ullage maneuver is completed before arming engine.
			ENG THR CONT: ENG ARM sw - ASC	Provides redundant engine power.
		If PGNCS in followup, select accept option and go to PGNCS step 13.		
		Reject alternatives: a. To perform thrust with RCS: Key ENTR - Go to PGNCS step 18 ENG THR CONT: ENG ARM sw - OFF b. To terminate: Key V34E FL V37 N-- Key XXE - Exit P42 ENG THR CONT: ENG ARM sw - OFF		
		11. If TFI is negative and nonzero: V06 N40 R1 TFI XXBXX min-sec R2 VG XXXX.X fps R3 ΔVm XXXX.X fps		
		12. When TFI = -00B00: Monitor APS thrust. If no APS burn, Eng START pb/lt - push	11. When EVNT TMR ind = 00:00 Monitor APS thrust. If no APS burn, Eng START pb/lt - push	
		CAUTION If APS burn is manually initiated, automatic engine shutoff will not occur. When shutoff criteria are reached, eng STOP pb/lt must be pushed.		

RC 1581, LM 3231

CREW-MAN	PNL	PROCEDURES		REMARKS
		4.10.1.2 APS Thrust Program (P42) With AGS Followup/In Control (cont)		
		13. DPS/APS Thrust Fail Routine (R40) If LGC detects thrust fail: FL V97 NXX - Perform engine fail procedure (noun and registers do not change) R1 XXXXX R2 XXXXX R3 XXXXX Alternatives to fail procedure: a. Verify LGC interpretation of thrust failure: Key PRO b. Attempt completion of maneuver: Key ENTR, return to step 10 c. Terminate: Key V34E - Exit P42 FL V37 N-- Key XXE ENG THR CONT: ENG ARM sw - OFF		R40 is called at nominal ignition time and remains active until engine cutoff. R40 monitors PIPA outputs and initiates engine fail procedures if thrust fail is detected. Engine thrust fails when PIPA detects ΔV of <10.1 fps (308 cm/sec) for five consecutive sampling periods of 2 seconds each, after nominal ignition time. Engine thrust also fails if, during thrusting period, ΔV is less than this threshold for two consecutive sampling periods of 2 seconds each. During FL V97 NXX, brief FL V06 may appear intermittently; this should be disregarded.
		14. V06 N40 R1 TFC XXBXX min-sec R2 VG XXXX.X fps R3 ΔVm XXXX.X fps TFC & VG decreasing, ΔVm increasing Monitor FDAI. Poss PROG lt - on Key V05 N09E - call alarm 01407 - VG increasing (angle between actual thrust vector and desired thrust vector >90°) Key KEY REL & RSET Terminate burn or switch to AGS (see switchover box) To switch to AGS: GUID CONT sw - AGS ABORT STAGE pb - push CB (11) S/C: AEA - close Go to AGS step 13.	12. Monitor ΔVgx: ENG THR CONT: BAL CPL sw - OFF If AGS in followup, go to AGS step 18. To switch to PGNCS: GUID CONT sw - PGNS Go to PGNCS step 15.	TFC is discontinuous and ΔVm becomes fairly constant for 4 to 5 seconds. ΔVgx begins to count-down at engine ignition. If VG is found to be increasing by LGC, engine-off command will not be generated. ENG THR CONT: BAL CPL sw - OFF reduces propellant consumption, however, in the event of single point failures of downward firing RCS jets ENG THR CONT: BAL CPL sw - ON is required to maintain attitude control. ENG THR CONT: BAL CPL sw - ON is desirable for the entirety of short APS burns (of a few seconds duration) or until vehicle attitude is stabilized after APS startup.

CREW-MAN	PNL	PROCEDURES		REMARKS
		4.10.1.2 APS Thrust Program (P42) With AGS Followup/In Control (cont)		
		If PGNS in followup, go to PGNCS step 18.		
		15. Perform APS/RCS Propellant Interconnect, steps 1 through 3.	13. Perform APS/RCS Propellant Interconnect, steps 1 through 3.	Ref para 4.13.3.3.
		16. When TFC = TBD, perform APS/RCS Propellant Interconnect, steps 4 & 5.	14. When $\Delta Vgx \leq$ TBD, perform APS/RCS Propellant Interconnect, steps 4 & 5.	Ref para 4.13.3.3.
		17. Monitor thrust cutoff: a. Early cutoff: Return to step 13.	15. When ΔVgx = 00000, monitor thrust cutoff.	
		b. Late or manual cutoff: Eng STOP pb/lt - push ENG THR CONT: ENG ARM sw - OFF	If thrust cutoff does not occur: Eng STOP pb/lt - push	Poss FL V97 NXX if LGC did not recognize fulfillment of cutoff criteria.
		Reset eng STOP pb/lt: (1) Release tab - push (2) Eng STOP pb/lt - on (3) If eng STOP pb/lt - off, verify that lights are functioning by performing Caution & Warning Array Checkout, steps 3 & 4 (para 4.2.10). If lights are functioning, inadvertent reset has taken place, eng is enabled, & steps (4), (5), & (6) should not be performed. (4) Eng STOP pb/lt - push (5) Release tab - push (6) Eng STOP pb/lt - off		
		c. Normal cutoff: ENG THR CONT: ENG ARM sw - OFF	16. Disarm APS engine & disable AGS engine control: a. Early or normal cutoff: ABORT STAGE pb - reset ENG THR CONT: ENG ARM sw - OFF b. Late cutoff: ABORT STAGE pb - reset ENG THR CONT: ENG ARM sw - OFF	

CREW-MAN	PNL	PROCEDURES	REMARKS
		4.10.1.2 APS Thrust Program (P42) With AGS Followup/In Control (cont)	
		Reset eng STOP pb/lt: (1) Release tab - push (2) Eng STOP pb/lt - on (3) If eng STOP pb/lt - off, verify that lights are functioning by performing Caution & Warning Array Checkout, steps 3 & 4 (para 4.2.10). If lights are functioning, inadvertent reset has taken place, eng is enabled, & steps (4), (5), & (6) should not be performed. (4) Eng STOP pb/lt - push (5) Release tab - push (6) Eng STOP pb/lt - off	
		To switch to AGS: GUID CONT sw - AGS CB (11) S/C: AEA - close Go to AGS step 17.	
		To switch to PGNCS: GUID CONT sw - PGNS Go to PGNCS step 18.	
		CAUTION Avoid touching ascent eng cover top or side with bare hand or glove from 5 min to 7.5 hr after APS burn. Maximum temperature of 220°F will be reached 1.5 hr after APS burn.	
		18. FL V16 N40 R1 TFC XXBXX min-sec R2 VG XXXX.X fps R3 ΔVm XXXX.X fps Record thrust parameters at their final value: Key PRO	At this time, LGC zeroes attitude error and sets 0.3° deadband in RCS DAP.

CREW-MAN	PNL	PROCEDURES		REMARKS
		4.10.1.2 APS Thrust Program (P42) With AGS Followup/In Control (cont)		
		19. FL V16 N85 - VG(LM) R1 X XXXX.X fps R2 Y XXXX.X fps R3 Z XXXX.X fps If PGNS in followup, go to PGNCS step 20. If nulling of VG is desired: S/C: PGNS sw - ATT HOLD ACA/TTCA - null VGX, VGY, VGZ		
			17. Trim ΔV residual: If not in Orbit Insertion (410+00000), select External ΔV: Key DEDA C 410+50000E Verify AEA attitude hold submode: Key DEDA C 400R If +00000 not displayed: Key DEDA C 400+00000E S/C: DEAD BAND sw - MIN ENG THR CONT: BAL CPL sw - ON Read and record: ΔVgx Key DEDA C 500R (0.1/1 fps) ΔVgy Key DEDA C 501R (0.1/1 fps) ΔVgz Key DEDA C 502R (0.1/1 fps)	If trim maneuver is performed after use of orbit insertion routine, it should be performed immediately after engine shutdown. Orbit insertion routine drives LM to specific point on desired orbit, and residual ΔVgx will increase naturally after engine shutdown.
			Read out and null ΔVg residuals in order of magnitude, largest first.	Null ΔVgx by moving TTCA up or down. Up TTCA nulls positive ΔVgx. Null ΔVgy by moving TTCA right or left. Right TTCA nulls positive ΔVgy. Null ΔVgz by moving TTCA in or out. In TTCA nulls positive ΔVgz.

CREW-MAN	PNL	PROCEDURES	REMARKS
		4.10.1.2 APS Thrust Program (P42) With AGS Followup/In Control (cont)	
		18. Read out predicted perifocus altitude: Key DEDA C 403R (0.1 nm) Compare with PGNCS Hp value.	
		19. Readout apofocus altitude: Key DEDA C 315R (0.1 nm) Compare with PGNCS Ha value.	
		20. Terminate P42 or select Orbit Parameter Display Routine (R30): a. Terminate: Key PRO FL V37 N-- Key XXE - Exit P42 or b. Select R30: Key V76E and verify/set No DAP lt - on S/C: PGNS sw - ATT HOLD to conserve RCS propellant by overriding LGC selected deadband (0.3°). Key V82E FL V16 N44 R1 Ha XXXX.X nm R2 Hp XXXX.X nm R3 TFF XXBXX min-sec Key PRO, when finished with display to reestablish N85 display Exit R30 FL V37 N-- Key XXE - Exit P42	At this time, LGC restores crew-specified (R03) deadband limits in RCS DAP. Orbit parameters are automatically recomputed every 2 seconds while average g is in process. Maximum TFF reading is 59B59.
		4.10.1.3 RCS Thrust Program (P41) With AGS Followup/In Control	Purpose of RCS Thrust Program (P41) With AGS Followup/In Control procedure is to compute preferred IMU orientation and LM attitude for RCS thrust maneuver and to maneuver LM to thrusting attitude. This procedure provides suitable displays for manual execution of thrust maneuver.

LM 3231

CREW-MAN	PNL	PROCEDURES		REMARKS
		4.10.1.3 RCS Thrust Program (P41) With AGS Followup/In Control (cont)		Following sequence of procedures may cause problems: 1. P3X, followed by P47, followed by P40, P41, or P42; prethurst computations may be overwritten by P47. To recover: Perform P3X, followed by P40, P41, or P42 2. Deleted
		ECS Basic (Staged or Unstaged) (required)	ECS Basic (Staged or Unstaged) (required)	Ref para 4.13.1.1.
		LGC Power-Up (required)		Ref para 4.6.1.1.
		LGC Self-Test (desired)		Ref para 4.6.1.13.
		LGC time valid (required)		LGC/CMC Clock Synchronization Routine (R33) (para 4.6.1.15)
		LGC state vector valid (required)		LGC Update Program (P27) (para 4.6.1.7)
		IMU Power-Up (LGC Operating) (required)		Ref para 4.6.1.3. ISS should be on 15 minutes before thrusting maneuver.

CREW-MAN	PNL	PROCEDURES		REMARKS
		4.10.1.3 RCS Thrust Program (P41) With AGS Followup/In Control (cont)		
		IMU Orientation Determination Program (P51) (required)		Ref para 4.9.1.1.
		DAP Data Load Routine (R03) (required)		Ref para 4.6.1.8.
		Appropriate prethrust program (required)		Ref para 4.7.
			AGS Power-Up (required)	Ref para 4.6.2.1.
			AEA Self-Test (desired)	Ref para 4.6.2.3.
			AGS time valid (required)	AGS Manual Absolute Time Initialization procedure (para 4.6.2.6) or AGS Initialization Routine (R47) (para 4.6.1.18)
			AGS LM state vector valid (required)	AGS Initialization Routine (R47) (para 4.6.1.18) or AGS Manual LM State Vector Update/Initialization procedure (para 4.6.2.7) or AGS Manual Rendezvous Radar LM State Vector Update (para 4.8.2.2)
			AGS CSM state vector valid (required)	AGS Initialization Routine (R47) (para 4.6.1.18) or AGS Manual CSM State Vector Update procedure (para 4.6.2.9)
			AGS alignment valid (required)	PGNCS/AGS Align (para 4.9.2.1), Backup AGS Alignment (Using AGS Body-Axis Alignment and PGNS IMU) (para 4.9.2.2), Backup AGS Alignment (Using AGS Body-Axis Alignment and AOT) (para 4.9.2.3), or AGS Lunar Align (para 4.9.3.2).
			AGS Wb Vector Update (required if mission warrants)	Ref para 4.6.2.15.

LM 3207

CREW-MAN	PNL	PROCEDURES		REMARKS
		4.10.1.3 RCS Thrust Program (P41) With AGS Followup/In Control (cont)		
			Appropriate prethrust procedure (required)	Ref para 4.7. If AGS TPI search prethrust procedure was previously selected, TPI execute must have been selected subsequent to that procedure.
		If PGNCS in followup, go to PGNCS step 4.		
		1. Establish attitude control: GUID CONT sw - PGNS S/C: PGNS sw - AUTO or ATT HOLD AGS sw - AUTO or ATT HOLD ROLL, PITCH, YAW sw - MODE CONT If No DAP lt - on: Key V77E, No DAP lt - off		Ref para 4.5.1. Attitude hold is used for PCI.
		2. Establish PGNCS total attitude & attitude rate/error display: ATTITUDE MON sw (1) - PGNS ATTITUDE MON sw (1) - AGS RATE/ERR MON sw (2) - LDG RDR/CMPTR		Ref para 4.5.3.1 and 4.5.3.2.
		3. Enable ACA/TTCA: ACA/4 JET sw (2) - ENABLE TTCA/TRANSL sw (2) - ENABLE THROTTLE/JETS cont (2) - JETS ENG THR CONT: ATT/TRANSL sw - 4 JETS BAL CPL sw - ON S/C: DEAD BAND sw - MIN ACA PROP sw (2) - ENABLE		
			If AGS in followup, go to AGS step 4.	
			1. Establish attitude control: Key DEDA C 400+00000E GUID CONT sw - AGS S/C: AGS sw - AUTO or ATT HOLD PGNS sw - AUTO ROLL, PITCH, YAW sw - MODE CONT	Attitude hold is used for PCI.

LM 3182

CREW-MAN	PNL	PROCEDURES		REMARKS
		4.10.1.3 RCS Thrust Program (P41) With AGS Followup/In Control (cont)		
			2. Establish AGS attitude error & total attitude display: ATTITUDE MON sw (1) - AGS ATTITUDE MON sw (1) - PGNS RATE/ERR MON sw (2) - LDG RDR/CMPTR	Ref para 4.5.3.3 and 4.5.3.4.
			3. Enable ACA/TTCA: ACA/4 JET sw (2) - ENABLE TTCA/TRANSL sw (2) - ENABLE ACA PROP sw (2) - ENABLE THROTTLE/JETS cont (2) - JETS ENG THR CONT: ATT/TRANSL sw - 4 JETS BAL CPL sw - ON S/C: DEAD BAND sw - MIN Go to step 6.	
			4. Select desired guidance steering: a. Z-axis parallel to CSM orbit plane: Key DEDA C 623+00000E C 400+10000E or b. Z-axis specified by Wb vector: Key DEDA C 623+10000E C 400+10000E	
			5. Deleted	
			If AGS in followup, go to AGS step 7.	
		To switch to AGS, go to AGS step 6.		
		4. Key V37E 41E	To switch to PGNCS: GUID CONT sw - PGNS Go to PGNCS step 4.	

CREW-MAN	PNL	PROCEDURES		REMARKS
		4.10.1.3 RCS Thrust Program (P41) With AGS Followup/In Control (cont)		
		Poss PROG lt - on Key V05 N09E - Call alarm 00210 - IMU not operating 00220 - ISS orientation not known Key KEY REL & RSET FL V37 N-- Key XXE - Exit P41		Perform IMU Power-Up (LGC Operating) procedure (para 4.6.1.3). Perform IMU Orientation Determination Program (P51) (para 4.9.1.1). To obtain optional display of TFI, VG, ΔV accumulated (before TIG-35 sec): Key V16 N40E R1 TFI XXBXX min-sec R2 VG XXXX.X fps R3 ΔV accumulated XXXX.X fps (0000.0 until TIG-30 sec) If V16 N40E is used to monitor TFI and displaces N85, key V16 N85E if VG display is desired again. To obtain optional display of TFE (before TIG-35 sec): Key V16 N35E - Time from event R1 00XXX hr R2 00XXX min R3 0XX.XX sec To obtain optional display of VG(LV) Key V06 N86E, N81E R1 X XXXX.X fps R2 Y XXXX.X fps R3 Z XXXX.X fps N81 display will now differ from N81 display in prethrust programs P3X because of rotation of VG vector (to compensate for nonimpulsive burn duration). LGC sets attitude errors to zero at this time.

CREW-MAN	PNL	PROCEDURES		REMARKS
		4.10.1.3. RCS Thrust Program (P41) With AGS Followup/In Control (cont)		
		5. Attitude Maneuver Routine (R60) FL V50 N18 - Perform automatic maneuver to final FDAI angles R1 Roll XXX.XX° R2 Pitch XXX.XX° R3 Yaw XXX.XX°		If final computed FDAI angles result in ±90° yaw, transformation from IMU to FDAI angles in roll and pitch is indeterminate and R1 and R2 will be zero.
		If PGNCS in followup or for PCI: Key ENTR, exit R60, Go to PGNCS step 7.	To switch to PGNCS: GUID CONT sw - PGNS Go to PGNCS step 5 & select automatic attitude maneuver.	
		Accept automatic attitude maneuver: GUID CONT sw - PGNS S/C: PGNS sw - AUTO Key PRO - Go to step 6		Automatic trim maneuver is considered essential for maneuvers to thrusting attitude.
		Reject alternatives (exit R60 via 5c): a. Perform manual attitude maneuver: Select desired attitude control mode - ACA - maneuver manually Key PRO - Return to beginning of step 5		Ref para 4.5.1
		b. To recompute gimbal angles: S/C: PGNS sw - ATT HOLD Key PRO - Return to beginning of step 5		
		c. When present attitude satisfactory: Null AGS yaw attitude error. Monitor yaw attitude error on FDAI error needle. ACA - null yaw error (X-axis override)		With AGS guidance steering, AGS orients LM Z-axis in specified direction. PGNCS-to-AGS switchover could result in large yaw excursion. Consider FDAI attitude error needles as

CREW-MAN	PNL	PROCEDURES		REMARKS
		4.10.1.3 RCS Thrust Program (P41) with AGS Follow/up In Control (cont)		
		S/C PGNS sw - AUTO Key ENTR - Exit R60, go to step 7		fly-to-needles. Needles can be nulled by flying from them. However, this results in false null and switchover to AGS will result in 180° yaw maneuver.
		6. If PGNCS automatic attitude maneuver selected: DSKY displays are blanked until completion of automatic maneuver. Monitor FDAI belly band, with respect to color band on roll bezel, to avoid gimbal lock.		If desired, Key extended verbs or Key V16 N18 - Final FDAI angles R1 Roll XXX.XX° R2 Pitch XXX.XX° R3 Yaw XXX.XX° Key KEY REL Belly band covers separation between hemispheres of FDAI ball. Belly band, in color bands on each side of FDAI roll bezel, would incate IMU middle gimbal angle $\geq 75°$. During this maneuver, LGC will terminate automatic maneuver if S/C: PGNS sw is switched out of AUTO.
		Monitor return of preceding display, indicating automatic maneuver is complete. To stop LM motion if gimbal lock is approached: S/C: PGNS sw - ATT HOLD If manual override & completion of attitude maneuver desired: Select desired attitude control mode - ACA - maneuver manually Return to step 5		Ref para 4.5.1
		To switch to AGS: GUID CONT sw - AGS S/C: AGS sw - AUTO Go to AGS step 7.	6. Perform AGS Orientation to Initial Computed Steering Attitude procedure or maintain attitude for PCI.	Ref para 4.6.2.13

LM 3238, LM 3231

CREW-MAN	PNL	PROCEDURES		REMARKS
		4.10.1.3 RCS Thrust Program (P41) with AGS Follow/up In control (cont)		
		7. V16 N85 - VG(LM) R1 X XXXX.X fps R2 Y XXXX.X fps R3 Z XXXX.X fps	7. Monitor velocity to be gained VG: Key DEDA C 370R (0.1/1 fps) Determine whether value of VG is ≥ 15 fps for step 9 procedure.	Parenthetical quantization notation: lunar mission/earth mission. Displays are blanked from TFI = -00B35 to -00B30. Beginning and duration of blanking cannot be defined if alarm 01703 occurs. Use of extended verb will blank V16 N85 display. Display will return at approximately TIG-29 or at TIG. If

LM 3231

CREW-MAN	PNL	PROCEDURES		REMARKS
		4.10.1.3 RCS Thrust Program (P41) With AGS Followup/In Control (cont)		
				display is desired before TIG-35 or between TIG-29 and TIG: Key V16 N85E Key KEY REL at or before KEY REL lt flashes at TIG
		CMPTR ACTY lt - on		CMPTR ACTY lt - on during State Vector Integration Routine (R41).
		Monitor PROG lt from TFI = -00B50 to -00B35. If PROG lt - on: Key V05 N09E - Call alarm 01703 - TIG slipped		To monitor progress of state vector integration, time (GET) to which state vector integration process has presently calculated state vector is available as follows: Key V16 N38E - TET R1 00XXX hr R2 000XX min R3 0XX.XX sec To terminate display: Key KEY REL TIG will be slipped, as required, to get state vector integration to new TIG-30 seconds.
		Key KEY REL and RSET CMPTR ACTY lt - off		State vector integration complete.
		At TIG-30 sec: V16 N85 - VG (LM) R1 X XXXX.X fps R2 Y XXXX.X fps R3 Z XXXX.X fps	8. Display velocity to be gained in desired direction: a. X-axis Key DEDA C 500R (0.1/1 fps) b. Y-axis Key DEDA C 501R (0.1/1 fps) c. Z-axis Key DEDA C 502R (0.1/1 fps) If AGS in followup, monitor ΔVgx and go to AGS step 14.	

CREW-MAN	PNL	PROCEDURES		REMARKS
		4.10.1.3 RCS Thrust Program (P41) With AGS Followup/In Control (cont)		
		To switch to AGS: GUID CONT sw - AGS Go to AGS step 9.		
			9. When EVNT TMR ind = 00:10: a. If VG was ≥15 fps in step 7: S/C: DEAD BAND sw - MIN Eng STOP pb/lt - push ABORT pb - push Go to step 10. b. If VG was <15 fps, or for Y translations: S/C: DEAD BAND sw - MIN S/C: AGS sw - ATT HOLD To switch to PGNCS: GUID CONT sw - PGNs Go to PGNCS step 9.	When X-axis VG reaches 15 fps, automatic selection of AEA attitude hold submode is produced, thus preventing gross attitude maneuvers as VG approaches zero fps and equations become unstable. There is no AEA attitude hold provision for VG <15 fps; therefore, manual attitude hold is required. For PCI maneuver, manual Y-translation is required; therefore, ATT HOLD is selected. LGC sets attitude errors to zero at this time.
		8. When EVNT TMR ind = 00:00: FL V16 N85 - VG(LM) R1 X XXXX.X fps R2 Y XXXX.X fps R3 Z XXXX.X fps		When LM configuration includes a heavy descent stage, PGNS in control, 4 jet -Y and -Z translations, when commanded, should be performed sequentially to avoid loss of vehicle attitude control. The word "heavy" is referenced to both ascent and descent propellant loading conditions.

THRU

CREW-MAN	PNL	PROCEDURES		REMARKS
		4.10.1.3 RCS Thrust Program (P41) With AGS Followup/In Control (cont)		
		If PGNCS in followup, go to PGNCS step 9.		
		S/C: PGNS sw - ATT HOLD ACA/TTCA - maneuver to null VG components		This maneuver is manual. Since both PGNCS and AGS calculate ΔV values, either DAP or CES can be used for stabilization and translation, using either computer readout of ΔV.
			10. When EVNT TMR ind = 00:00: a. X-axis selected - TTCA - move up or down	For positive translation, TTCA is moved up.
			b. Y-axis selected - TTCA - move left or right	For positive translation, TTCA is moved right.
			c. Z-axis selected - TTCA - move in or out	For positive translation, TTCA is moved in.
			11. When ΔVgz = 15 fps: S/C: AGS sw - ATT HOLD	
			12. When ΔVgx, ΔVgy or ΔVgz = +00000: TTCA - release	
			13. Null Vg residuals: Repeat AGS step 8a, b, & c, & record quantities. Repeat AGS step 10a, b, & c, nulling ΔVg residuals in order of magnitude (largest first).	
			14. If step 9 a was selected: ABORT pb - reset Eng STOP pb/lt - reset	
			15. Read out predicted perifocus altitude: Key DEDA C 403R (0.1 nm) Compare with PGNCS Hp value.	
			16. Read out apofocus altitude: Key DEDA C 315R (0.1 nm) Compare with PGNCS Ha value.	

CREW-MAN	PNL	PROCEDURES	REMARKS
		4.10.1.3 RCS Thrust Program (P41) With ACS Followup/In Control (cont)	
		9. Terminate P41 or select Orbit Parameter Display Routine (R30): a. Terminate: Key PRO FL V37 N-- Key XXE - Exit P41 or b. Select R30: Key V82E Poss OPR ERR lt - on Key RSET, exit R30 FL V16 N44 R1 Ha XXXX.X nm R2 Hp XXXX.X nm R3 TFF XXBXX min-sec Key PRO when finished with display to reestablish N85 display: Exit R30: Key PRO FL V 37 N-- Key XXE - Exit P41	At this time, LGC restores crew-specified (R03) deadband limits in RCS DAP. Orbit parameters are automatically recomputed every 2 seconds while average g is in process. OPR ERR lt - on if another extended verb from R76 is active.
		4.10.1.4 Thrust Monitor Program (P47)	Purpose of Thrust Monitor Program (P47) is to monitor LM acceleration during AGS-controlled burns or manual RCS translations and to display ΔV's resulting from thrusting maneuvers.
		LGC Power-Up (required)	Ref para 4.6.1.1.
		LGC Self-Test (desired)	Ref para 4.6.1.13.
		LGC time valid (required)	LGC/CMC Clock Synchronization Routine (R33) (para 4.6.1.15)
		LGC state vector valid (required)	LGC Update Program (para 4.6.1.7) and, when appropriate, Rendezvous Navigation Program (P20) (para 4.8.2.1)
		IMU Power-Up (LGC Operating) (required)	Ref para 4.6.1.3. ISS should be on 15 minutes before thrusting maneuver.

CREW-MAN	PNL	PROCEDURES	REMARKS
		4.10.1.4 Thrust Monitor Program (P47)(cont)	
		IMU Orientation Determination Program (P51) (required)	Ref para 4.9.1.1.
		DAP Data Load Routine (R03) (required)	Ref para 4.6.1.8.
		1. Select total attitude display: ATTITUDE MON sw - PGNS ORDEAL: FDAI 1 sw - as desired FDAI 2 sw - as desired	Ref para 4.5.3.1.
		2. Key V37E 47E Poss PROG lt - on Key V05 N09E - Call alarm	P47 should be selected immediately before planned thrusting maneuver and terminated as soon as possible after maneuver to keep errors associated with average-g integration at minimum.
		00210 - IMU not on	Perform IMU Power-Up (LGC Operating) procedure (para 4.6.1.3)
		00220 - IMU orientation not known Key KEY REL & RSET FL V37N-- Key XXE-Exit P47	Perform IMU Orientation Program (P51) (para 4.9.1.1)
		CMPTR ACTY lt - on	CMPTR ACTY lt - on during State Vector Integration Routine (R41). To monitor progress of state vector integration, time (GET) to which state vector integration process has presently calculated state vector is available as follows: Key V16 N38E - TET R1 XXXXX hr R2 000XX min R3 0XX.XX sec To terminate display: Key KEY REL
		CMPTR ACTY lt - off	State vector integration complete. (20 seconds minimum)
		3. FL V16 N83 - ΔV (LM) R1 X XXXX.X fps R2 Y XXXX.X fps R3 Z XXXX.X fps	Registers display 0000.0, except for PIPA bias accumulation, until thrusting maneuver is started. N83 is updated every 2 seconds.

CREW-MAN	PNL	PROCEDURES	REMARKS
		4.10.1.4 Thrust Monitor-Program (P47) (cont)	
		4. Perform desired thrusting maneuver, monitoring FDAI to avoid gimbal lock.	Rendezvous Parameter Display Routine (R31) may be called during this program to display range, range rate, and θ. If electromagnetic interference in system is identified as caused by tracking light (regular pulses on audio channel or indicated on SIGNAL STRENGTH ind at approximate frequency of 1 pps), tracking light may be turned off until transmission or reception is complete.
		5. To zero displays for monitoring another burn: Key V32E To terminate monitoring: Key PRO or V34E	When the LM configuration includes a "heavy" descent stage, PGNS in control, 4 jet -Y & -Z translations when commanded should be performed sequentially to avoid loss of vehicle attitude control. The word "heavy" is referenced to both ascent and descent propellant loading conditions.
		6. FL V37 N-- Key XXE - Exit P47	
		4.10.1.5 AGS RCS Axis-by-Axis Thrust	RCS fuel is used more efficiently when burn is done along velocity-to-be-gained vector. However, this procedure can be used to perform burns of small ΔV magnitude where orientation attitude maneuver is large.
		AGS Power-Up (required)	Ref para 4.6.2.1.
		AEA Self-Test (desired)	Ref para 4.6.2.3.
		AGS time valid (required)	AGS Initialization Routine (R47) (para 4.6.1.18) or AGS Manual Absolute Time Initialization procedure (para 4.6.2.6)
		AGS LM state vector valid (required)	AGS Initialization Routine (R47) (para 4.6.1.18) or AGS Manual LM State Vector Update/Initialization procedure (para 4.6.2.7) or AGS Manual Rendezvous Radar LM State Vector Update procedure (para 4.8.2.2)
		AGS CSM state vector valid (required)	AGS Initialization Routine (R47) (para 4.6.1.18) or AGS Manual CSM State Vector Update/Initialization procedure (para 4.6.2.9)

CREW-MAN	PNL	PROCEDURES	REMARKS
		4.10.1.5 AGS RCS Axis-by-Axis Thrust (cont)	
		AGS alignment valid (required)	PGNCS/AGS Align (para 4.9.2.1), Backup AGS Alignment (Using AGS Body-Axis and PGNS IMU) (para 4.9.2.2), Backup AGS Alignment (Using AGS Body-Axis Alignment and AOT) (para 4.9.2.3), or AGS Lunar Align (para 4.9.3.2)
		Appropriate prethrust procedure performed (required)	Ref para 4.7.
		1. Enable ACA/TTCA:	
	4	ACA/4 JET sw (2) - ENABLE	
		TTCA/TRANSL sw (2) - ENABLE	
	TTCA	THROTTLE/JETS cont (2) - JETS	
	1	ENG THR CONT: ATT/TRANSL sw - 2 JETS	
	1,2	ACA PROP sw (2) - ENABLE	
		2. Prepare thrust controls for RCS burn:	
	1	ENG THR CONT: ENG ARM sw - OFF	
		ABORT pb - reset	
		ABORT STAGE pb - reset	
	5	Eng START pb/lt - off	
	4,5	Eng STOP pb/lt (2) - reset	
		3. Select desired attitude control mode:	Ref para 4.5.1.
	1	a. GUID CONT sw - AGS	
	3	S/C:	
		AGS sw - ATT HOLD	
		ROLL, PITCH, YAW sw - MODE CONT	
		DEAD BAND sw - MIN	
	1	ENG THR CONT: BAL CPL sw - ON	
		or	
		b. Select AEA attitude hold submode:	
		Key DEDA C 400+00000E	
		Establish AGS automatic mode:	
		GUID CONT sw - AGS	
	3	S/C:	
		AGS sw - AUTO	
		ROLL, PITCH, YAW sw - MODE CONT	
		DEAD BAND sw - MIN	
	1	ENG THR CONT: BAL CPL sw - ON	

CREW-MAN	PNL	PROCEDURES	REMARKS
		4.10.1.5 AGS RCS Axis-by-Axis Thrust (cont)	
		4. If trimming on orbit-insertion burn: a. If mode has been changed: Key DEDA C 410+00000E - Orbit Insertion Mode b. If trim ignition time not yet targeted: Read out present AGS time & record Key C 377R (0.1 min) Load present time as tigD Key C 373+XXXXXE (0.1 min) c. Select External ΔV: Key DEDA C410+0000E d. Go to step 7.	
		5. If trimming an in-orbit burn: Go to step 7.	
		6. If targeted specifically for axis-by-axis thrust: Go to step 8.	
		7. Read and record: ΔVgx Key DEDA C 500 R (0.1/1 fps) ΔVgy Key DEDA C 501 R (0.1/1 fps) ΔVgz Key DEDA C 502 R (0.1/1 fps)	
		8. Read out and null ΔVg residuals, in order of magnitude, largest first.	Null ΔVgx by moving TTCA up or down. Up TTCA nulls positive ΔVgx. Null ΔVgy by moving TTCA right or left. Right TTCA nulls positive ΔVgy. Null ΔVgz by moving TTCA in or out. In TTCA nulls positive ΔVgz.
		4.10.1.6 RCS Burn for Lunar Impact (Unmanned Ascent Stage)	LM RCS jets will be used to cause ascent stage to impact moon, near seismometer. An erasable memory RCS thrust program may be loaded via P27 and utilized to perform deorbit maneuver.

LM 3231

CREW-MAN	PNL	PROCEDURES	REMARKS
		4.10.1.6 RCS Burn for Lunar Impact (Unmanned Ascent Stage)(cont)	
		LGC Power-Up (required)	Ref para 4.6.1.1.
		LGC Self-Test (desired)	Ref para 4.6.1.13.
		LGC time valid (desired)	LGC/CMC Clock Synchronization Routine (R33) (para 4.6.1.15).
		LGC state vector valid (desired)	LGC Update Program (P27) (para 4.6.1.7) and, when appropriate, LM Rendezvous Navigation Program (P20) (para 4.8.2.1).
		IMU Power-Up (LGC Operating) (required)	Ref para 4.6.1.3. ISS should be on 15 minutes before thrusting maneuver.
		IMU Orientation Determination (P51) (required)	Ref para 4.9.1.1.
		DAP Data Load Routine (R03) (desired)	Ref para 4.6.1.8.
		DUA Enable (required)	Ref para 4.13.2.11.
		AGS Power-Up (desired)	Ref para 4.6.2.1.
		AEA Self-Test (desired)	Ref para 4.6.2.3.
		AGS Time Valid (desired)	AGS Manual Absolute Time Initialization (para 4.6.2.6) or AGS Initialization Routine (R47) (para 4.6.1.18).
		AGS LM State Vector Valid (desired)	AGS Initialization Routine (R47) (para 4.6.1.18) or AGS Manual LM State Vector Update/Initialization (para 4.6.2.7) or AGS Manual Rendezvous Radar LM State Vector Update (para 4.8.2.2).
		PGNCS/AGS Align (desired)	Ref para 4.9.2.1. PGNS prerequisites identified as being desired can be performed by MSFN after start of this procedure, but must be accomplished at some time. AGS prerequisites support monitoring via AGS.
		1. Target LGC (with AEA follow-up), using data provided by MSFN. Deorbit maneuver is initiated and terminated, using an uplinked- or DSKY-loaded erasable memory program (such as Guided RCS Thrust Erasable Memory Program, P99).	MSFN can provide external ΔV and time of ignition for use with LGC Program 30 and AEA 410+50000 (ref para 4.7.1.1) (if onboard data must be updated), or can target LGC, load erasable program, and initiate it via uplink.

RC 1590, LM 3197, LM 3231

CREW-MAN	PNL	PROCEDURES	REMARKS
		4.10.1.6 RCS Burn for Lunar Impact (Unmanned Ascent Stage)(cont)	
		2. If desired, perform Crew Defined Maneuver Routine (R62).	Ref para 4.6.1.9.
		2A. Stop integration & go to P00 Key V96E Load erasable memory program & associated routines (such as P99) via LGC Update Program (P27).	P99 uplink - Program number is specified by the contents of location 3421 (underlined below). Addresses are valid for Luminary 1E.

Load 1

V71E
FL V21 N01
24E
3404E
1450E
12324E
5520E
161E
1400E
12150E
5656E
3667E
74066E
12404E
12433E
1406E
5313E
143E
36266E
54333E
6060E
77634E
FL V21 N02
V33E

Load 2

V71E
FL V21 N01
12E
3734E
26E
30605E
151E
5214E
0E
0E
15400E
0E
FL V21 N02
V33E

Load 3

V71E
FL V21 N01
3400E
5520E
312E
5263E
FL V21 N02
V33E

Load 4

V71E
FL V21 N01
6E
3426E
10636E
56246E
77650E
75202E
FL V21 N02
V33E

Load 5

V72E
FL V21 N01
15E
3455E
1404E
1250E
0E
3515E
4E
2371E
13001E
2372E
1420E
2373E
12067E
FL V21 N02
V33E

CREW-MAN	PNL	PROCEDURES	REMARKS
		4.10.1.6 RCS Burn for Lunar Impact (Unmanned Ascent State)(cont)	
		2B. Select mode II attitude error display & disarm engine. Key V62E ENG THR CONT: ENG ARM sw - OFF	Ref para 4.5.3.2.
		2C. Select erasable memory program: Key V30E - Verify program number Poss OPR ERR lt - on Exit V30, Key RSET Repeat step 2A FL V50 N18 R1 Roll XXX.XX° R2 Pitch XXX.XX° R3 Yaw XXX.XX° If CSM orientation maneuver-to-burn attitude is completed: Key ENTR V06 N40 R1 TFI XXBXX min-sec R2 VG XXXX.X fps R3 ΔVM XXXX.X fps	MSFN can perform all of erasable memory program or continue orientation maneuver by keying V33E after LM jettison. OPR ERR lt - on if R1 of N26 = 0

CREW-MAN	PNL	PROCEDURES	REMARKS
		4.10.1.6 RCS Burn for Lunar Impact (Unmanned Ascent Stage) (cont)	
CDR	1	3. GUID CONT sw - PGNS	Positions of switches not constrained by requirements of this task and positions of momentary-contact switches are not listed.
CDR	1	4. ASC He REG 1 & 2 tb - gray	
LMP	2	5. RCS: SYS A & B ASC FUEL & ASC OXID tb(4) - bp SYS A & B QUAD 1,2,3 & 4 tb(8) - gray CRSFD tb - bp SYS A & B MAIN SOV tb(2) - gray	
		6. GLYCOL sel - PUMP 1	
CDR	3	7. S/C: ROLL, PITCH & YAW sw - MODE CONT PGNS sw - AUTO	
		8. LTG: FLOOD sw - ALL EXTERIOR LTG sw - TRACK	LTG: FLOOD sw - OFF before leaving LM or when flood-lighting is no longer required. Overhead/forward flood-lights remain on while overhead hatch is open; they go off at closing of hatch.
CDR	4	9. ACA/4 JET sw (2) - DISABLE TTCA/TRANSL sw (2) - DISABLE	
	1,2	ACA PROP sw (2) - DISABLE	
	5,6	10. Eng STOP pb/lt (2) - reset	

CREW-MAN	PNL	PROCEDURES	REMARKS
		4.10.1.6 RCS Burn for Lunar Impact (Unmanned Ascent Stage) (cont)	
LMP	12	11. COMM: UP DATA LINK sw - DATA S BAND MODULATE sw - PM S BAND XMTR/RCVR sw - PRIM S BAND PWR AMPL sw - PRIM S BAND VOICE sw - OFF S BAND PCM sw - PCM S BAND RANGE sw - RANGE VHF A XMTR sw - OFF VHF A RCVR sw - OFF VHF B XMTR sw - OFF VHF B RCVR sw - OFF TLM BIOMED sw - OFF TLM PCM sw - HI RECORDER sw - OFF COMM ANT: TRACK MODE sw - SLEW PITCH cont - ____ (ccw) YAW cont - ____ (ccw) S BAND sel - SLEW	Computed angles from MSFN approached in ccw direction.
	14	12. EPS: POWER/TEMP MON sel - ED/OFF INVERTER sw - 2	
CDR	11	13. All cb's - open, except: CB AC BUS B: S BD ANT - close AGS - close BUS TIE INV 2 & 1 - close CB AC BUS A: BUS TIE INV 2 & 1 - close AC BUS VOLT - close CB RCS SYS A: QUAD 4, 3, 2, & 1 TCA - close CB INST: SIG CONDR 1 - close CB S/C: AEA - close ATCA (PGNS) - close CB HTR RCS SYS A/B 1: QUAD 4, 3, 2, & 1 - close	

CREW-MAN	PNL	PROCEDURES	REMARKS
		4.10.1.6 RCS Burn for Lunar Impact (Unmanned Ascent Stage) (cont)	
		CB ECS: SUIT FAN 1 - close GLYCOL PUMP 2 - close GLYCOL PUMP 1 - close GLYCOL PUMP AUTO TRNFR - close CB COMM: UP DATA LINK - close CB PGNS: LGC/DSKY - close IMU STBY - close IMU OPR - close CB EPS: BAT FEED TIE (2) - close CROSS TIE BAL LOADS - close CROSS TIE BUS - close ASC ECA CONT - close XLUNAR BUS TIE - close ASC ECA - close INV 1 - close DC BUS VOLT - close Verify cb status per RCS Burn for Lunar Impact	See fig 4-22.
LMP	16	14. All cb's - open, except: CB RCS SYS B: QUAD 1, 2, 3, & 4 TCA - close PQGS/DISP - close CB LTG: TRACK - close FLOOD - close CB S/C: AEA - close ASA - close ATCA - close ATCA (AGS) - close CB INST: CWEA - close SIG SENSOR - close PCM/TE - close SIG CONDR 2 - close	RCS and MPS display circuit breakers must not be opened until status of RCS and ascent solenoid valves has been verified. CB RCS SYS B: PQGS/DISP must be left closed to enable telemetry transmission to MSFN.

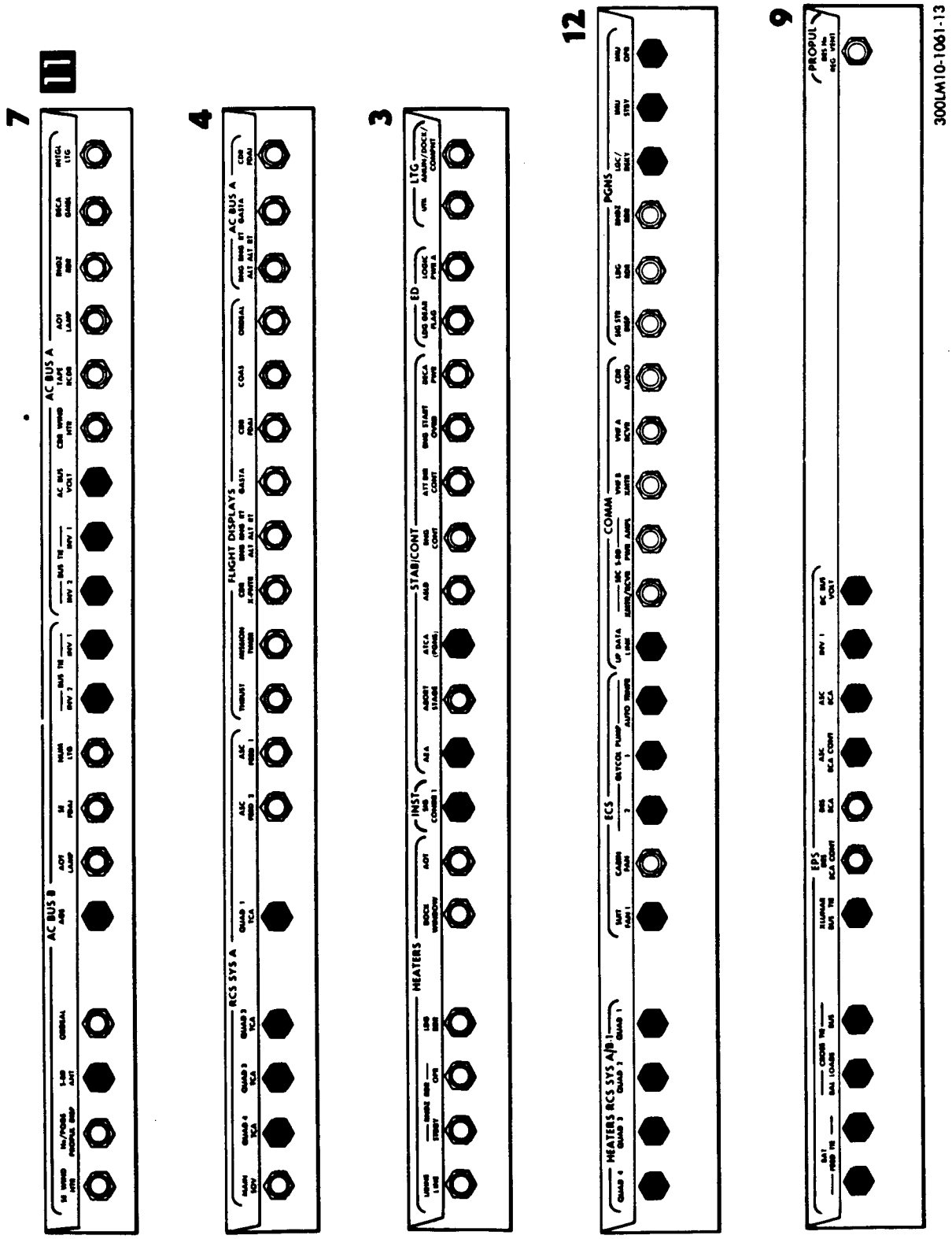

Figure 4-22. RCS Burn for Lunar Impact (Panel 11)

CREW-MAN	PNL	PROCEDURES	REMARKS
		4.10.1.6 RCS Burn for Lunar Impact (Unmanned Ascent Stage) (cont)	
		CB COMM: DISP - close VHF A XMTR - close VHF B RCVR - close PRIM S BD PWR AMPL - close PRIM S BD XMTR/RCVR - close S BD ANT - close PMP - close CB ECS: CABIN REPRESS - close SUIT FAN ΔP - close CO2 SENSOR CB HTR RCS SYS A/B 2: QUAD 1, 2, 3, & 4 - close CB HTR: S BD ANT - close CB EPS: DISP - close DC BUS VOLT - close INV 2 - close ASC ECA - close XLUNAR BUS TIE - close BAT FEED TIE (2) - close Verify cb status per RCS Burn for Lunar Impact.	See fig 4-23.
	14	15. EPS: BAT 5 BACK UP CDR FEED sw - ON; tb - gray BAT 6 BACK UP LMP FEED sw - ON; tb - gray	This step places ascent batteries on alternative feed paths.
	16	CB EPS: DISP - open	
	1	16. ENG THR CONT: ENG ARM sw - OFF	
	11	17. CB ECS: SUIT FAN 1 - open	
		Perform Intravehicular Transfer to CSM.	Ref para 4.14.4. Preparation for jettison, and jettison, are controlled from CSM. Postjettison coast can be monitored visually from CSM. LM is controlled by MSFN via uplink commands to DUA.

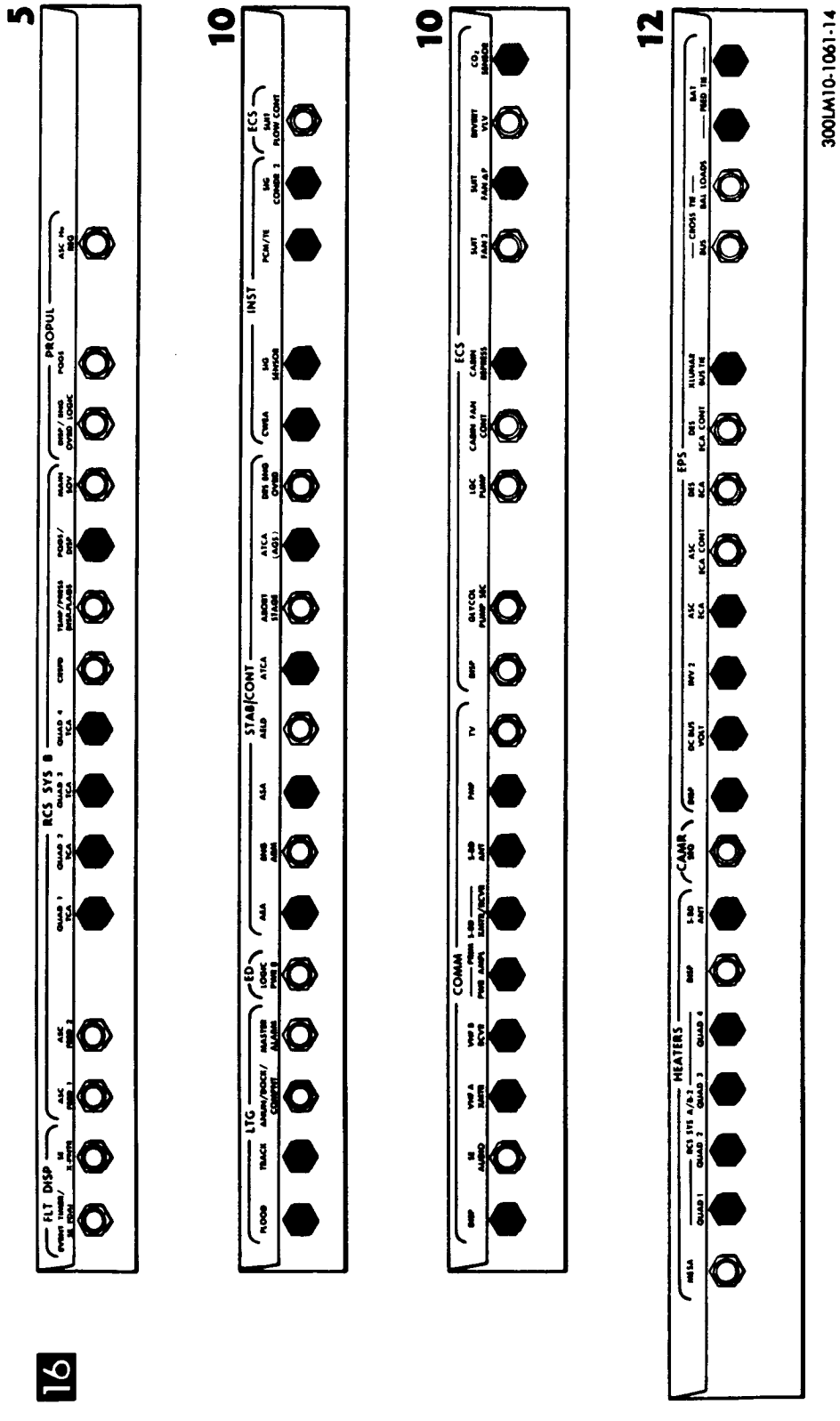

Figure 4-23. RCS Burn for Lunar Impact (Panel 16)

CREW-MAN	PNL	PROCEDURES		REMARKS
		4.10.1.7 Docked DPS Thrust Program (P40) With AGS Followup CAUTION Do not select this procedure unless VG is greater than ΔVm resulting from ullage maneuver.		Purpose of Docked DPS Thrust (P40) With AGS Followup procedure is to compute preferred IMU orientation and LM attitude for DPS thrust maneuver. This procedure controls PGNCS during countdown, ignition, thrusting, and thrust termination. Docked DPS thrust is to be performed under PGNCS control only, because CES cannot stabilize combined vehicles during thrusting. Therefore, switching to AGS automatic control during this procedure is prohibited; AGS is used only to monitor performance. Descent engine must not be operated in throttling range of 65% to 92.5%, where operation of cavitating venturis in flow control valves becomes unpredictable and may cause incorrect fuel-oxidizer mixtures ratio. Operation in 60% to 92.5% range will cause excessive engine erosion and early combustion chamber burn-through.
		MPS Basic (Unstaged) (required) ECS Basic (Unstaged) (required) EPS Preparation for DPS Burn (required) DPS Pressurization and Checkout (required)	MPS Basic (Unstaged) (required) ECS Basic (Unstaged) (required) EPS Preparation for DPS Burn (required) DPS Pressurization and Checkout (required)	Ref para 4.13.3.1. Ref para 4.13.1.1. Ref para 4.13.4.3. Ref para 4.2.29.
		LGC Power-Up (required) LGC Self-Test (desired) LGC time valid (required)		Ref para 4.6.1.1. Ref para 4.6.1.13. LGC/CMC Clock Synchronization (R33) (para 4.6.1.15)
		LGC state vector valid (required) IMU Power-Up (LGC Operating) (required)		LGC Update (P27) (para 4.6.1.7) Ref para 4.6.1.3. ISS should be on 15 minutes before thrusting maneuver.
		IMU Orientation Determination (P51) (required) DAP Data Load Routine (R03) (required)		Ref para 4.9.1.1. Ref para 4.6.1.8. If docked with CSM, KALCMANU maneuver rate loaded in R03 should be 0.5°/second or

CREW-MAN	PNL	PROCEDURES		REMARKS
		4.10.1.7 Docked DPS Thrust Program (P40) With AGS Followup (cont)		0.2°/second. During docked DPS burns, two-jet system B ullage should be selected. Rate command rates in docked configuration are one-tenth those of undocked configuration for same DAP load bit. Docked deadband is 1.4°.
		Appropriate prethrust program (required)		Ref para 4.7.
			AGS Power-Up (required)	Ref para 4.6.2.1.
			AEA Self-Test (desired)	Ref para 4.6.2.3.
			AGS time valid (desired)	AGS Manual Absolute Time Initialization (para 4.6.2.6) or AGS Initialization Routine (R47) (para 4.6.1.18)
			AGS LM state vector valid (desired)	AGS Initialization Routine (R47) (para 4.6.1.18), or AGS Manual LM State Vector Update/Initialization (para 4.6.2.7), or AGS Manual Rendezvous Radar LM State Vector Update (para 4.8.2.2)
			AGS CSM state vector valid (desired)	AGS Initialization Routine (R47) (para 4.6.1.18) or AGS Manual CSM State Vector Update/Initialization (para 4.6.2.7)
			AGS Alignment valid (required)	PGNCS/AGS Align (para 4.9.2.1), Backup AGS Alignment (using AGS Body-Axis Alignment and PGNS IMU) para (4.9.2.2), Backup AGS Alignment (using AGS Body Axis Alignment and AOT) (para 4.9.2.3), or AGS Lunar Align (para 4.9.3.2)
			AGS Wb Vector Update (required if mission warrants)	Ref para 4.6.2.15.
			Appropriate prethrust procedure (required)	Ref para 4.7. If AGS TPI search prethrust procedure was used, TPI execute must have been selected subsequent to that procedure.

CREW-MAN	PNL	PROCEDURES		REMARKS
		4.10.1.7 Docked DPS Thrust Program (P40) With AGS Followup (cont)		
		CAUTION PQGS should be in operation 15 min before start of thrust but should not be operated continuously for more than 45 min, to prevent equipment damage due to electronics overheating.		Ref para 4.5.1. Do not use attitude hold/rate command mode when docked with CSM.
		1. Prepare PQGS for thrust monitoring: PRPLNT QTY MON sw - DES 1 If DES QTY warn lt - on, it can be extinguished after ullage settling has been established by cycling PRPLNT QTY MON sw to OFF, then DES 1.		PQGS low-level detection circuit will latch up in low-quantity position if sensor probes are not immersed in propellant because of lack of ullage settling.
		2. Establish attitude control: GUID CONT sw - PGNS S/C: PGNS sw - ATT HOLD AGS sw - ATT HOLD Key V76E No DAP lt - on S/C: ROLL, PITCH, YAW sw - MODE CONT		
		3. Establish PGNCS total attitude & attitude rate/error display: ATTITUDE MON sw (1) - PGNS RATE/ERR MON sw (2) - LDG RDR/CMPTR		Ref para 4.5.3.1 and 4.5.3.2
		4. Enable ACA/TTCA: THROTTLE/JETS cont (1) - JETS THROTTLE/JETS cont (1) - THROTTLE ENG THR CONT: ATT/TRANSL sw - 2 JETS ACA PROP sw (2) - ENABLE		
		5. Prepare controls for DPS burn: ENG THR CONT: THR CONT sw - MAN MAN THROT sw - as required ENG ARM sw - OFF		

CREW-MAN	PNL	PROCEDURES		REMARKS
		4.10.1.7 Docked DPS Thrust Program (P40) With AGS Followup (cont)		
		ABORT pb - reset ABORT STAGE pb - reset Eng START pb/lt - off Eng STOP pb/lt (2) - reset DES ENG CMD OVRD sw - OFF ENG GMBL sw - ENABLE ENG THR CONT: BAL CPL sw - ON S/C: DEAD BAND sw - MIN		
			CAUTION PQGS should be in operation 15 min before start of thrust but should not be operated continuously for more than 45 min, to prevent equipment damage due to electronics overheating.	
			1. Prepare PQGS for thrust monitoring: PRPLNT QTY MON sw - DES 1 If DES QTY warn lt - on, it can be extinguished after ullage settling has been established by cycling PRPLNT QTY MON sw to OFF, then DES 1.	PGNS low-level detection circuit will latch up in low-quantity position if sensor probes are not immersed in propellant because of lack of ullage settling.
			2. Select desired guidance steering: a. Z-axis parallel to CSM orbit plane - Key DEDA C 623+00000E Key DEDA C 400+100000E or b. Z-axis specified by Wb vector - Key DEDA C 623+10000E Key DEDA C 400+10000E	
			3. Deleted	
		6. Select P40: Key V37E 40E Poss FL V05 N09 - Alarm		

CREW-MAN	PNL	PROCEDURES	REMARKS
		4.10.1.7 Docked DPS Thrust Program (P40) With AGS Followup (cont)	
		01706 - Loaded configuration indicates DPS staged PROG lt - on Key V34E & RSET FL V37 N-- Key XXE, exit P40 & reload DAP Poss PROG lt - on Key V05 N09E - Call alarm 00210 - IMU not operating	Perform IMU Power-UP (LGC Operating) (para 4.6.1.3). Perform IMU Orientation Determination (P51) (para 4.9.1.1).
		00220 - ISS orientation not known Key KEY REL & RSET FL V37 N-- Key XXE, exit P40 To obtain optional display of VG (LV): Key V06 N86E R1 X XXXX.X fps R2 Y XXXX.X fps R3 Z XXXX.X fps To terminate display: Key KEY REL	
		7. Attitude Maneuver Routine (R60) FL V50 N18 - Perform automatic maneuver to final FDAI angles R1 Roll XXX.XX° R2 Pitch XXX.XX° R3 Yaw XXX.XX° If desired, before continuing R60, crew may alter values of parameters DVTHRUSH, DVCNTR, TDECAY+1 as follows: Key V21 N01E (01250E, 03515E, or 03741E, respectively), (new data)E	If final computed FDAI angles result in ±90° yaw, transformation from IMU to FDAI angles in roll and pitch is indeterminate and R1 and R2 will be zero. Decision to alter these values and desired new values would be coordinated with, and received from MSFN. Some or all values are octal and complemented values.

LM 3158

CREW-MAN	PNL	PROCEDURES		REMARKS
		4.10.1.7 Docked DPS Thrust Program (P40) With AGS Followup (cont)		
		After CSM maneuver to thrust attitude - a. Accept automatic attitude maneuver: GUID CONT sw - PGNS S/C: PGNS sw - AUTO Key PRO - go to step 8 b. When present attitude satisfactory: Null AGS yaw attitude error. Monitor yaw attitude error on FDAI error needle. ACA - null yaw error (X-axis override) Key ENTR - Exit R60, go to step 9		For docked DPS burns, CSM initially maneuvers to thrust attitude and LM performs automatic trim maneuver in step 8.
		8. If PGNCS automatic attitude maneuver selected: DSKY displays are blanked until completion of automatic maneuver. Monitor FDAI belly band, with respect to color band on roll bezel, to avoid gimbal lock.		If desired, Key extended verbs or Key V16 N18 - Final FDAI angles R1 Roll XXX.XX° R2 Pitch XXX.XX° R3 Yaw XXX.XX° Key KEY REL Belly band covers separation between hemispheres of FDAI ball. Belly band, in color bands on each side of FDAI roll bezel, would indicate IMU middle gimbal angle $\geq$75°. During this maneuver, LGC will terminate automatic maneuver if S/C: PGNS sw is switched out of AUTO.
		Return to step 7.		

CREW-MAN	PNL	PROCEDURES		REMARKS
		4.10.1.7 Docked DPS Thrust Program (P40) With AGS Followup (cont)		
			4. Monitor X-axis component of velocity to be gained: Key DEDA C 500R (0.1/1 fps)	Parenthetical quantization notation: lunar mission/earth mission. Readout will equal total velocity to be gained if LM is properly oriented for DPS burn. Inhibiting X-axis RCS jets during DPS burn is recommended, to minimize thermal impingement problems with descent stage and CSM.
		9. Poss FL V50 N25 - Checklist reference R1 00203 - Switch to PGNCS automatic mode R2 ——— R3 ———		

CREW-MAN	PNL	PROCEDURES	REMARKS
		4.10.1.7 Docked DPS Thrust Program (P40) With AGS Followup (cont)	
		If PGNCS automatic mode desired: GUID CONT sw - PGNS S/C: PGNS sw - AUTO ENG THR CONT: THR CONT sw - AUTO Key PRO If PGNCS automatic mode was selected or not desired: Key ENTR Key V65E - Disable U & V jets	
		10. V06 N40 - R1 TFI XXBXX min-sec R2 VG XXXX.X fps R3 ΔVm XXXX.X fps	R3 displays 00000 until TFI = -00B30. V06 N40 displays are blanked from TFI = -00B35 to -00B30. If alarm 01703 occurs, beginning and duration of blanking cannot be defined.
		CMPTR ACTY lt - on Monitor PROG lt from TFI = -00B50 to -00B35. If PROG lt - on: Key V05 N09E - Call alarm 01703 - TIG slipped	CMPTR ACTY lt - on during State Vector Integration Routine (R41). TIG will be slipped, as required, to get state vector integration to new TIG-30 seconds.
		Key KEY REL & RSET CMPTR ACTY lt - off Update EVNT TMR ind if required.	State vector integration complete.
		11. Verify TTCA - minimum thrust CB S/C: DECA PWR - close (if open)	
		12. When TFI = -00B29: V06 N40 R1 TFI XXBXX min-sec R2 VG XXXX.X fps R3 ΔVm XXXX.X fps Verify ΔVm ≤ 0.5 fps from TFI = -00B30 to -00B15	ΔVm >0.5 fps indicates excessive PIPA bias error.
		13. If first DPS burn, enable supercritical He pressurization: ED: MASTER ARM sw - ON	

CREW-MAN	PNL	PROCEDURES	REMARKS
		4.10.1.7 Docked DPS Thrust Program (P40) With AGS Followup (cont)	
		14. When TFI = -00B10: Initiate ullage maneuver: TTCA - move up until TFI = -00B05	
		CAUTION DES ENG CMD OVRD sw - OFF	If DES ENG CMD OVRD sw - ON, engine will start upon arming.
		ENG THR CONT: ENG ARM sw - DES	
		15. When TFI = -00B05 FL V99 N40 - Engine-on enable R1 TFI XXBXX min-sec R2 VG XXXX.X fps R3 ΔVm XXXX.X fps Accept: When ΔVm>XXXX.X fps Key PRO Reject: Key V34E FL V37 N-- Key XXE, exit P40 ENG THR CONT: ENG ARM sw - OFF	During FL V99 N40, brief FL V06 may appear intermittently; this should be disregarded. Response to FL V99 N40 should be made as soon as possible, to decrease possibility of violating descent stage thermal constraint (approximately 15 seconds).
		CAUTION Do not select rate command attitude hold mode during docked DPS burns. This can result in loss of attitude control.	
		16. If TFI is negative & nonzero: V06 N40 R1 TFI XXBXX min-sec R2 VG XXXX.X fps R3 ΔVm XXXX.X fps	If TFI is not negative and nonzero, DPS engine is commanded on when PRO is keyed in step 15.
		17. When TFI = -00B00, monitor thrust. If no DPS burn: Eng START pb/lt - push	

CREW-MAN	PNL	PROCEDURES		REMARKS
		4.10.1.7 Docked DPS Thrust Program (P40) With AGS Followup (cont)		
		18. Poss DES QTY warn lt MASTER ALARM pb/lt - reset PRPLNT QTY MON sw-cycle OFF,then DES 1 DES QTY warn lt - off		
		CAUTION If DPS burn is manually initiated (eng START pb/lt), automatic eng shutoff will not occur. When shut-off criteria are reached, eng STOP pb/lt must be pushed. Rough combustion may be expected at start of DPS burns due to gas inges-tion in propellants. Roughness may last as long as 25 sec, depending on how quickly eng is throttled up. There is no constraint on throttling due to this roughness.		
		19. V06 N40 R1 TFC XXBXX min-sec R2 VG XXXX.X fps R3 ΔVm XXXX.X fps When EVNT ind - 00:05: TTCA - increase to 40% TFC & VG decreasing, ΔVm increasing Monitor FDAI Poss PROG lt - on Key V05 N09E - Call alarm 01407 - VG increasing Key KEY REL & RSET Terminate burn.	5. Monitor ΔVgx	ΔVgx will begin to count-down at engine ignition. TFC is discontinuous and ΔVm becomes fairly constant for 4 to 5 seconds. If VG is found to be increasing by LGC, engine-off command will not be generated.
		19A. If propellant quantity >29%: DES He REG 1 sw - OPEN; tb - gray		
		20. If first DPS burn: ED: MASTER ARM sw - OFF MASTER ALARM - on MASTER ALARM pb/lt - reset		MASTER ALARM - on when ED: MASTER ARM sw - OFF, due to relay race removing CWEA inhibit.

CREW-MAN	PNL	PROCEDURES	REMARKS
		4.10.1.7 Docked DPS Thrust Program (P40) With AGS Followup (cont)	
		21. DPS/APS Thrust Fail Routine (R40) If LGC detects thrust fail: FL V97 N40 - Perform engine fail procedures R1 TFC XXBXX min-sec R2 VG XXXX.X fps R3 ΔVm XXXX.X fps Alternatives to fail procedure: a. Verify LGC interpretation of thrust failure: Key PRO b. Attempt completion of maneuver: Key ENTR, return to step 15 c. Terminate: Key V34E - Exit P40 FL V37 N-- Key XXE	R40 is called at nominal ignition time and remains active until engine cutoff. R40 monitors PIPA outputs and initiates engine fail procedures if thrust fail is detected. Engine thrust fails when PIPA detects ΔV of <0.394 fps (12 cm/sec) (docked configuration) for five consecutive sampling periods of 2 seconds each, after nominal ignition time. Engine thrust also fails if, during thrusting period, ΔV is less than this threshold for two consecutive sampling periods of 2 seconds each. During FL V97 N40, brief FL V06 may appear intermittently; this should be disregarded.
		21A. When propellant quantity = 29% or At TFC-10 sec (<86%): DES He REG 1 sw - CLOSE; tb - bp	
		22. When EVNT TMR ind = 00:26: ENG THRUST ind - approx 100% CMD THRUST ind - approx 70% Unless TG <95 sec	When EVNT TMR ind = 00:26 = TIG+26 seconds, throttle is commanded to maximum. If TB <95 seconds, no-throttle flag is set to inhibit throttle command from going maximum, to prevent inaccurate engine-cutoff computations when engine thrust level varies.
		23. Monitor thrust cutoff when TFC = 00B00. Eng STOP pb/lt - push after automatic cutoff or if cutoff does not occur ENG THR CONT: ENG ARM sw - OFF If cutoff is early, return to step 21.	

LM

CREW-MAN	PNL	PROCEDURES		REMARKS
		4.10.1.7 Docked DPS Thrust Program (P40) With AGS Followup (cont)		
		24. S/C: PGNS sw - ATT HOLD		
		25. Key V75E - Reenable U & V jets		
		26. FL V16 N40 R1 TFC XXBXX min-sec R2 VG XXXX.X fps R3 ΔVm XXXX.X fps Record thrust parameters at their final value: Key PRO Record final propellant quantity noted during thrust. PRPLNT QTY MON sw - OFF		
		27. FL V16 N85 - VG (LM) R1 X XXXX.X fps R2 Y XXXX.X fps R3 Z XXXX.X fps If nulling of VG is desired: Key V77E NO DAP 1t - off THROTTLE/JETS cont (CDR) - JETS ACA/TTCA - null VGX, VGY, VGZ		
		28. Key V76E when maneuver is completed. NO DAP 1t - on	6. Read out predicted perifocus altitude: Key DEDA C 403R (0.1 nm) Compare with PGNCS Hp value. 7. Read out apofocus altitude: Key DEDA C 315R (0.1 nm) Compare with PGNCS Ha value.	
		29. Terminate P40 or select Orbit Parameter Display Routine (R30): a. Terminate: Key PRO FL V37 N— Key XXE, exit P40 or b. Select R30: Key V82E FL V16 N44 R1 Ha XXXX.X nm R2 Hp XXXX.X nm R3 TFF XXBXX min-sec		While average g is in process, orbit parameters are automatically recomputed every 2 seconds.

RC 1606

CREW-MAN	PNL	PROCEDURES		REMARKS
		4.10.1.7 Docked DPS Thrust Program (P40) With AGS Followup (cont)		
		Key PRO when finished with display to reestablish N85 display, exit R30		
		Key PRO FL V37 N-- Key XXE, exit P40		
		30. Key V66E Turn off ascent batteries: EPS: BAT 5 NORMAL LMP FEED sw - OFF; tb - bp BAT 6 NORMAL CDR FEED sw - OFF; tb - bp		For docked DPS burn, CSM state vector should be updated via V66 before separation, because LGC assumed that CSM was in coasting orbit during burn.
		31. Perform EPS check, Post-DPS Burn.		Ref para 4.13.4.4.

LM 3231

CREW-MAN	PNL	PROCEDURES	REMARKS
		4.10.2 POWERED DESCENT	
		4.10.2.1 Braking Phase Program (P63) With AGS Preparation for Orbit Insertion (410+00000)	Purpose of Braking Phase Program (P63) is to calculate required time of DPS ignition. This procedure controls PGNCS during countdown, ignition, and thrusting of powered landing maneuver, to obtain desired aim conditions for braking phase. Successful accomplishment of braking phase aim conditions (high gate) is indicated to crew by automatic selection of Approach Phase Program (P64). P63 must be selected at least 20 minutes before nominal TIG for powered landing. This procedure prepares AGS to steer LM by changing DPS thrust vector from retrograde (PGNCS braking phase) to posigrade to achieve orbit insertion. Landing Analog Displays Routine (R10) is enabled near start of average g in P63 and is terminated when average g is terminated. U-jets and V-jets may be disabled (V65E) or enabled (V75E). This capability is intended to be used during Docked DPS Thrust Program (P40) with AGS Followup only. However, this capability is available during P63. Following DSKY display is available during powered landing, to support manual throttle operations. (Auto command is not available for display on THRUST ind during manual throttle.) V16 N92E R1 Desired auto throttle XXXXX% (may be >100% of FTP thrust) R2 H rate XXXX.X fps R3 H XXXXX fps ENG THR CONT: THR CONT sw - MAN is permitted at any time during powered descent. However, (in P63, P64) whenever GUID CONT sw - PGNS and S/C:PGNS sw - AUTO, care should be exercised that manual command does not exceed LGC desired thrust more than briefly; otherwise, LGC may invert LM in attempting to achieve targeted trajectory.

CREW-MAN	PNL	PROCEDURES	REMARKS
		4.10.2.1 Braking Phase Program (P63) With AGS Preparation for Orbit Insertion (410+00000) (cont)	
		MPS Basic (Unstaged) (required)	Ref para 4.13.3.1.
		ECS Basic (Unstaged) (required)	Ref para 4.13.1.1.
		EPS Preparation for DPS Burn (required)	Ref para 4.13.4.3.
		DPS Pressurization & Checkout (required)	Ref para 4.2.29.
		S-Band Steerable Antenna Activation (High Power) (required)	Ref para 4.2.20.
		LGC Power-Up (required)	Ref para 4.6.1.1.
		LGC Self-Test (required)	Ref para 4.6.1.13.
		LGC time valid (required)	LGC/CMC Clock Synchronization Routine (R33) (para 4.6.1.15)
		LM & CSM state vectors valid	LGC Update Program (P27) (para 4.6.1.7)
		Landing site position & nominal landing time at designated landing site valid (required)	LGC Update Program (P27) (para 4.6.1.7)
		IMU Power-Up (LGC Operating) (required)	Ref para 4.6.1.3. ISS should be on 15 minutes before thrusting.
		IMU aligned to landing site orientation for designated landing site & nominal time of landing (required)	IMU Realign Program (P52) (para 4.9.1.2)
		DAP Data Load Routine (R03) (required)	Ref para 4.6.1.8.
		AGS Power-Up (required)	Ref para 4.6.2.1.
		AEA Self-Test (required)	Ref para 4.6.2.3.
		AGS time valid (required)	AGS Initialization Routine (R47) (para 4.6.1.18)
		AGS LM & CSM state vectors valid (required)	AGS Initialization Routine (R47) (para 4.6.1.18)
		PGNCS/AGS Align (required)	Ref para 4.9.2.1.

CREW-MAN	PNL	PROCEDURES	REMARKS
		4.10.2.1 Braking Phase Program (P63) With AGS Preparation for Orbit Insertion (410+00000) (cont)	
		AGS Wb Vector Update (required if mission warrants)	Ref para 4.6.2.15. (Required for orbit insertion from far westerly lunar landing sites.)
		AGS Orbit Insertion (required)	Ref para 4.7.3.2.
		AGS Gyro & Accelerometer Calibration (desired)	Ref para 4.6.2.5.
		Landing Radar Power-Up (required)	Ref para 4.6.3.7.
		Landing Radar Checkout (required)	Ref para 4.6.3.8. Assumption: Procedure leaves antenna in position No. 1.
		Rendezvous Radar Power-Up (desired)	Ref para 4.6.3.1.
		Rendezvous Radar Checkout (desired)	Ref para 4.6.3.2.
		EVNT TMR ind set to count-up to zero at TIG, based on MSFN-provided data (required)	Ref para 4.13.6.
		CSM in preferred tracking attitude (required)	
		Aim conditions required for braking phase stored in LGC before launch (required)	
		1. Prepare PQGS for thrust monitoring:	PQGS low-level detection circuitry will latch up in low-quantity position if sensor probes are not immersed in propellant due to lack of ullage settling.
		CAUTION PQGS should be in operation 15 min before start of thrust but should not be operated continuously for more than 45 min, to prevent equipment damage due to electronics overheating.	
		PRPLNT QTY MON sw - DES 1 If DES QTY warn lt - on: PRPLNT QTY MON sw - OFF, then DES 1 (after ullage settling)	
		2. Establish attitude control:	Ref para 4.5.1.
	1	GUID CONT sw - PGNS	
	3	S/C:	
		PGNS sw - AUTO	
		ROLL, PITCH, YAW sw - MODE CONT	

CREW-MAN	PNL	PROCEDURES	REMARKS
		4.10.2.1 Braking Phase Program (P63) With AGS Preparation for Orbit Insertion (410+00000) (cont)	
		3. Select displays:	
	1	MODE SEL sw - AGS	
		ATTITUDE MON sw (1) - AGS	
		ATTITUDE MON sw (1) - PGNS	
		RATE/ERR MON sw (2) - LDG PDR/CMPTR	
		4. Enable ACA/ TTCA:	
	4	ACA/4 JET sw (2) - ENABLE	
		TTCA/TRANSL sw (2) - ENABLE	
		THROTTLE/JETS cont (2) - THROTTLE	
		TTCA (CDR) - minimum position	
		TTCA (LMP) - soft stop	
	1	ENG THR CONT: ATT/TRANSL sw - 4 JETS	
	1,2	ACA PROP sw (2) - ENABLE	
	11	5. CB LTG: UTIL - close	
	ULP	CDR UTILITY LIGHT sw - BRIGHT	
		LMP UTILITY LIGHT sw - BRIGHT	
		6. Prepare controls for DPS burn:	
	1	ENG THR CONT:	
		THR CONT sw - AUTO	
		MAN THROT sw - CDR	
		ENG ARM sw - OFF	
		ABORT pb - reset	
		ABORT STAGE pb - reset	
	3	RNDZ RADAR sel - AUTO TRACK	
	5	Eng START pb/lt - off	
	5,6	Eng STOP pb/lt (2) - reset	
	3	DES ENG CMD OVRD sw - OFF	
		ENG GMBL sw - ENABLE	
	1	ENG THR CONT: BAL CPL sw - ON	
	3	S/C: DEAD BAND sw - MIN	
	11	CB S/C: AELD - close	
	16	CB S/C: AELD - close	
		7. Deleted	

LM 3231

CREW-MAN	PNL	PROCEDURES	REMARKS
		4.10.2.1 Braking Phase Program (P63) With AGS Preparation for Orbit Insertion (410+00000) (cont)	
		8. Prepare AGS for followup: a. Select guidance steering from following (1) X-axis guidance steering, Z-axis parallel to CSM orbital plane - Key DEDA C 400+10000E Key DEDA C 623+00000E or (2) Yaw orientation specified by Wb vector - Key DEDA C 400+10000E Key DEDA C 623+10000E	Wb vector is provided for S-band LOS angle for orbit insertion from far westerly lunar landing sites.
	3 16 11	b. S/C: AGS sw - ATT HOLD or AUTO c. CB S/C: AEA - close CB S/C: AEA - open	AEA backup d-c power circuit breaker should be open, except when PGNCS fails.
		9. Key V37E 63E Poss PROG lt - on Key V05 N9E - Call alarm	If P68 is inadvertently selected instead of P63: a. Reset APSFLAG and SURFFLAG- Key V37E 00E V25 N07E, 104E, 200E, E V25 N07E, 106E, 10000E, E b. Perform P27 update of RLS (values TBD) via DSKY or uplink Key V71E (confirm P27 established) FL V21 N01 Key 12E, 02020E, XXXXXE (most significant part of RLSx) XXXXXE (least significant part of RLSx) XXXXXE (most significant part of RLSy) XXXXXE (least significant part of RLSy) XXXXXE (most significant part of RLSz) XXXXXE (least significant part of RLSz) XXXXXE (most significant part of TLAND) XXXXXE (least significant part of TLAND) FL V21 N02 Key V PRO c. Reselect P63 - Key V37E 63E If it is desired to change altitude at which LR updates are inhibited, from stored value of 50 feet (scaled in meters at B-10), new octal value may be loaded at this time as follows: V21 N01E 3451E XXXXXE

CREW-MAN	PNL	PROCEDURES	REMARKS
		4.10.2.1 Braking Phase Program (P63) With AGS Preparation for Orbit Insertion (410+00000) (cont)	
		00210 - IMU not on	Perform IMU Power-Up (LGC Operating) procedure (para 4.6.1.3).
		00220 - IMU orientation not known	Perform IMU Orientation Determination Program (P51) (para 4.9.1.1).
		Key KEY REL & RSET FL V37 N-- Key XXE - Exit P63 Poss PROG lt - on Key V05 N09E - Call alarm 01412 - Descent ignition algorithm not converging Key KEY REL & RSET Key V96E or V37E XXE - Exit P63	
		10. FL V06 N61 - Maneuver parameters R1 TG -XXBXX min-sec	TG - Initial value - Estimated time of full thrust flight to accomplish aim condition of high gate. TG will count-down (based on actual thrust) after full thrust is commanded.
		R2 TFI XXBXX min-sec R3 Crossrange ±XXXX.X nm	TFI - Time from ignition Crossrange - Out-of-plane distance between initial LM orbital plane and presently designated landing site. Plus indicates plane is south; minus indicates plane is north of landing site.
		Reset EVNT TMR ind to TFI Key PRO	Visual confidence check, using estimate of surface range from known landmark close to planned time of ignition and present LM position, can be performed at this time.

LM 3197, LM 3231

CREW-MAN	PNL	PROCEDURES	REMARKS
		4.10.2.1 Braking Phase Program (P63) With AGS Preparation for Orbit Insertion (410+00000) (cont)	
		11. Deleted	
		12. Attitude Maneuver Routine (R60) FL V50 N18 - Perform automatic maneuver to final FDAI angles: R1 Roll XXX.XX° R2 Pitch XXX.XX° R3 Yaw XXX.XX°	LGC automatically sets 1° deadband in RCS DAP. If final computed FDAI angles result in ±90° yaw, transformation from IMU to FDAI angles in roll and pitch is indeterminate and R1 and R2 will be zero.
		If desired, before continuing R60, crew may alter values of parameters DVTHRUSH or DVCNTR as follows: Key V21 N01E (01250E or 03515E respectively), (new data) E	Decision to alter these values and desired new values would be coordinated with, and received from, MSFN. Some or all values are octal and complemented values.
	1 3	Accept automatic attitude maneuver: GUID CONT sw - PGNS S/C: PGNS sw - AUTO Key PRO - Go to step 13	Automatic trim maneuver is considered essential for maneuvers to thrusting attitude.
		Reject alternatives: a. Perform manual attitude maneuver: Select desired attitude control mode - ACA - maneuver manually Key PRO - Return to beginning of step 12	Ref para 4.5.1.
	3	b. To recompute gimbal angles: S/C: PGNS sw - ATT HOLD Key PRO - Return to beginning of step 12	
		c. When present attitude satisfactory: ACA - adjust yaw as required for S-band track (X-axis override) Key ENTR - Exit R60, go to step 14	PDI yaw attitude, to maintain S-band track, is landing site dependent.
		13. If PGNCS automatic attitude maneuver selected: Pre-R60 displays return until completion of automatic maneuver. Monitor FDAI belly band, with respect to color band on roll bezel, to avoid gimbal lock.	If desired, Key extended verbs or Key V16 N18 - Final FDAI angles R1 Roll XXX.XX° R2 Pitch XXX.XX° R3 Yaw XXX.XX° Key KEY REL Belly band covers separation between hemispheres of FDAI ball. Belly band, in color bands on each side of FDAI roll bezel, would indicate IMU middle gimbal angle ≥75°.

CREW-MAN	PNL	PROCEDURES	REMARKS
		4.10.2.1. Braking Phase Program (P63) With AGS Preparation for Orbit Insertion (410+00000) (cont)	
		If manual override & completion of attitude maneuver desired:	During this maneuver, LGC will terminate automatic maneuver if S/C: PGNS sw is switched out of AUTO.
		Select desired attitude control mode -	
		ACA - maneuver manually	Ref para 4.5.1.
		Return to step 12	
			S-band track verification should be made after yaw down maneuver.
		14. Poss FL V50 N25 - Perform checklist	
		R1 00500 - Switch LR antenna to descent (position No. 1)	
		R2 -----	
		R3 -----	
		If LR has not been manually commanded to descent position:	
		RADAR: LDG ANT sw - DES, hold for 10 sec, then AUTO	
		Key PRO	
		If LR has been manually commanded to descent position:	
		Key ENTR	
		Poss FL V50 N25 - Perform checklist	
		R1 00203 - Switch to PGNCS automatic mode	
		R2 -----	
		R3 -----	
		If PGNCS automatic mode was not selected:	
	1	GUID CONT sw - PGNS	
	3	S/C: PGNS sw - AUTO	Gross attitude check can be made by comparing orientation of horizon in overhead window and FDAI gimbal angles with MSFN nominal values.
	1	ENG THR CONT: THR CONT sw - AUTO	
		Key PRO	
		If PGNCS auotmatic mode was selected: Key ENTR	Discrete to LGC may be erroneous.
		15. Update & align AGS:	
		Perform AGS Initialization Routine (R47).	Ref para 4.6.1.18.
		Perform AGS Gyro & Accelerometer Calibration.	Ref para 4.6.2.5.
		Display LM velocity magnitude on DEDA:	
		Key DEDA C 433R (0.1/1 fps)	Parenthetical quantization notation: lunar mission/earth mission.
		Compare DEDA velocity magnitude with MSFN velocity magnitude.	
		Monitor ΔVgx:	
		Key DEDA C 500R (0.1/1 fps)	

RC 1596, LM 999, LM 3231

CREW-MAN	PNL	PROCEDURES	REMARKS
		4.10.2.1 Braking Phase Program (P63) With AGS Preparation for Orbit Insertion (410+00000) (cont)	
		16. V06 N62 R1 VI XXXX.X fps R2 TFI XXBXX min-sec R3 ΔVm 0000.0 fps	Displays are blanked from TFI = -00B35 to -00B30. Beginning and duration of blanking cannot be defined if alarm 01703 occurs.
		CMPTR ACTY lt - on Monitor PROG lt from TFI = 00B50 to -00B35. If PROG lt - on: Key V05 N09E - Call alarm	CMPTR ACTY lt - on during State Vector Integration Routine (R41).
		01703 - TIG slipped	TIG will be slipped, as required, to get state vector integration to new TIG-30 seconds.
		Key KEY REL & RSET CMPTR ACTY lt - off TTCA (CDR & LMP) - minimum (hardstop) At TFI = -00B29:	State Vector Integration complete.
		Poss ALT lt - on (R20)	ALT lt - on steady if LR range data-good discrete not present.
		Poss VEL lt - on (R20)	VEL lt - on steady if LR velocity data-good discrete not present.
		V06 N62 R1 VI XXXX.X fps R2 TFI XXBXX min-sec R3 ΔVm XXXX.X fps Verify ΔVm ≤0.5 fps from TFI = -00B30 to -00B15.	
		If ΔVm >0.5 fps: TBD	ΔVm >0.5 fps indicates excessive PIPA bias error.
		Verify VI in R1 is within ±5 fps of MSFN value of LM inertial velocity. Poss FL VEL lt	VEL lt - flashing if two or more of last four consecutive values of ΔV exceed data test limits (reasonability test).
			Do not Key V37E within approximately 50 micro seconds before ullage (If necessary to Key V37E, do it before TIG-10 seconds or after ullage comes on) to avoid continuous ullage with average g off.

CREW-MAN	PNL	PROCEDURES	REMARKS
		4.10.2.1 Braking Phase Program (P63) With AGS Preparation for Orbit Insertion (410+00000) (cont)	
		17. When TFI = -00B07: Monitor start of automatic ullage	
		CAUTION	
	1	DES ENG CMD OVRD sw - OFF ENG THR CONT: ENG ARM sw - DES CMD THRUST ind = 10% If >10%, do not continue P63.	
		18. When TFI = -00B05: FL V99 N62 - Engine-on enable R1 VI XXXX.X fps R2 TFI XXBXX min-sec R3 ΔVm XXXX.X fps To permit engine ignition: When ΔVm ≥ XXXX.X fps, Key PRO To reject ignition:	During FL V99 N62, brief FL V06 may appear intermittently; this should be disregarded.
	1	ENG THR CONT: ENG ARM sw - OFF Key V34E - Terminate P63 FL V37 N-- Key XXE	
		CAUTION Rough combustion may be expected at start of DPS burns due to gas ingestion in propellants. Roughness may last as long as 25 sec, depending on how quickly eng is throttled up. There is no constraint on throttling due to this roughness.	
		19. If TFI is negative and nonzero: V06 N62 R1 VI XXXX.X fps R2 TFI XXBXX min-sec R3 ΔVm XXXX.X fps When TFI = 00B00: Monitor ENG THRUST ind - 10% If no thrust: TBD	If TFI is not negative and nonzero, DPS engine is commanded on when PRO is keyed in step 18.

CREW-MAN	PNL	PROCEDURES	REMARKS
		4.10.2.1 Braking Phase Program (P63) With AGS Preparation for Orbit Insertion (410+00000) (cont)	
		20. DPS/APS Thrust Fail Routine (R40) is called at nominal ignition time & remains active until engine cutoff.	Purpose of R40 is to monitor PIPA outputs and initiate engine fail procedures if thrust fail is detected. Engine thrust fails when PIPA detects ΔV of <1.18 fps (36 cm/sec) for five consecutive sampling periods of 2 seconds each, after nominal ignition time. Engine thrust also fails if, during thrusting period, ΔV is less than this threshold for two consecutive sampling periods of 2 seconds each.
		LGC detects thrust fail: FL V97 NXX - Perform engine fail procedure R1 XXXXX R2 XXXXX R3 XXXXX Alternatives to fail procedure: a. Verify LGC interpretation of thrust failure Key PRO b. Terminate: Key V34E - Exit R40 & P63 FL V37 N-- XXE	During FL V97 NXX, brief FL V06 may appear intermittently; this should be disregarded.
		21. Zero AGS ullage counter threshold: Key DEDA C 616+00000E	
		22. FL V06 N63 R1 ΔH XXXXX ft R2 H rate XXXX.X fps R3 H XXXXX ft	ΔH - LR altitude minus LGC altitude above terrain model or landing site radius. +99999 is displayed prior to LR data good. Verb-noun flash occurs only in P63. A PRO, V32E, or V34E response to N63 will be ignored. H rate - Altitude rate: -, descent; +, ascent H - Altitude; +, above landing site radius
	1	Observe at TIG + X sec - CMD THRUST ind - approx 100% ENG THRUST ind - approx 100%	X is approximately 26 seconds. Exact time is loaded before launch or by LGC Update Program (P27).

LM 3197, LM 3231

CREW-MAN	PNL	PROCEDURES	REMARKS
		4.10.2.1 Braking Phase Program (P63) With AGS Preparation for Orbit Insertion (410+00000) (cont)	
			Landing Auto Modes Monitor Routine (R13) is called by P63 at DPS throttle up and selects P66 if S/C: PGNS sw - ATT HOLD and LM crew commands net change in rate of descent. If S/C: PGNS sw - ATT HOLD but DES RATE sw has not been operated since change to attitude hold mode, present PGNCS program, P63, or P64 is maintained and crew has manual control of LM attitude. PGNCS continues to command DPS throttle and display LGC-computed attitude errors on FDAI error needles.
			If PROG lt comes on due to 01406 alarm (bad return from ROOTPSRS) or 01410 alarm (unintentional overflow in guidance), all LM attitude rates will stop but program will continue. Large attitude errors, which may have developed during manual attitude maneuvers, will no longer lead to loss of landing programs.
			DPS performance can be monitored at this time by verifying CMD THRUST ind >50%, T/W ind >1.0 g.
	3	23. DES ENG CMD OVRD sw - ON	Following checks should be performed at 90-second intervals. a. Alternate and compare PGNCS and AGS attitude error inputs between FDAI's. b. Compare PGNCS altitude, altitude rate, and lateral velocity with AGS-derived parameters on ALT/ALT RATE ind and X pointer ind.
		24. When H = 45,000 ft or at PDI+2 min (whichever occurs first) if LM in window down orientation: ACA - manually yaw LM right at 2°/sec to window-up orientation. or When H = 30,000 ft, X-axis override is removed & LGC commands LM to specified attitude. or At PDI +3 min if LM in yaw angle for S-band track ACA - manually null yaw angle (yaw override)	 S-band track verification should be made after yaw up maneuver. Time of nulling of yaw angle is landing site dependent.

CREW-MAN	PNL	PROCEDURES	REMARKS
		4.10.2.1 Braking Phase Program (P63) With AGS Preparation for Orbit Insertion (410+00000) (cont)	
		25. Descent State Vector Update Routine (R12)	Routine R12 is called every 2 seconds once average g is turned on and terminates when average g terminates. Lunar terrain model computations (for LR update adjustments) in R12 are bypassed when V68 is executed or Landing Phase Program (P66) is entered.
		To enable use of LR data (and disable N63 flash in P63): Key V57E	Two verbs are available for manual control of LR data for state vector updating: V57 - Enable use of LR data (and disable N63 verb-noun flash in P63) V58 - Inhibit use of LR data (and re-enable N63 verb-noun flash in P63)
			If desired: Key V16 N68E R1 Horizontal range (to landing site) XXXX.X nm R2 TG XXBXX min-sec R3 VI (Inertial velocity) XXXX.X fps
		Poss PROG lt - on Key V05 N09E - Call alarm 00511 - Neither or both LR antenna position discretes present for more than 10 sec. Key KEY REL & RSET	
		To perform manual altitude update of AEA: Key DEDA C 223+XXXXXE (100 ft)	XXXXX must be nonzero. Address contents are reset to zero by AEA within 2 seconds, thus allowing later updates.
		LR/RR Read Routine (R20)	Purpose of LR/RR Read Routine (R20) is to read LR/RR parameters requested by calling routine (R12), to perform various checks to ensure that system is operating correctly, and to ensure an alarm if errors occur in RR reading.
		Poss PROG lt - on	
		Key V05 N09E - Call alarm 00520 - RADARUPT not expected at this time or no radar sampling requested at this time Key KEY REL & RSET	RADARUPT: LGC interrupt.

CREW-MAN	PNL	PROCEDURES	REMARKS
		4.10.2.2 Approach Phase Program (P64) WARNING DES QTY warn lt will not be accompanied by MASTER ALARM; therefore, crewman must monitor MPS: FUEL & OXID QUANTITY ind.	Purpose of Approach Phase Program (P64) is to control PGNCS during thrusting, from completion of high gate aim conditions until completion of low-gate aim conditions; to control LM thrust and attitude in manner to provide visibility of presently designated landing site; and to provide landing site redesignation capability. Successful accomplishment of low-gate aim conditions is indicated by automatic selection of Landing Phase (ROD) Program (P66). If desired: Key V16 N68E R1 Horizontal range (to landing site) XXXX.X nm R2 TG XXBXX min-sec R3 VI (Inertial velocity) XXXX.X fps Following DSKY display is available during powered landing, to support manual throttle operations. (Auto command is not available for display on THRUST ind during manual throttle.) V16 N92E R1 Desired auto throttle XXXXX% (may be >100% of FTP thrust) R2 H rate XXXX.X fps R3 H XXXXX feet ENG THR CONT: THR CONT sw - MAN is permitted at any time during powered descent. However, (in P63, P64) whenever GUID CONT sw - PGNS and S/C:PGNS sw - AUTO, care should be exercised

CREW-MAN	PNL	PROCEDURES	REMARKS
		4.10.2.2 Approach Phase Program (P64) (cont)	
			that manual command does not exceed LGC desired thrust more than briefly; otherwise, LGC may invert LM in attempting to achieve targeted trajectory.
		1. PROG Ind - 64	Attitude deadband is automatically set to 0.3° at this time.
		Poss FL ALT lt	ALT lt - flashing if two or more of last four consecutive values of ΔH exceed data test limits (reasonability test).
		2. FL V06 N64 R1 TR/LPD XXBXX sec-deg R2 H rate XXXX.X fps R3 H XXXXX ft	TR is defined as estimated time remaining until end of redesignation capability. LPD is defined as angle below LM +Z-axis to LOS of presently designated landing site.
		Descent State Vector Update Routine (R12)	R12 continues to run throughout powered descent until P68.
		Poss PROG lt - on Key V05 N09E - Call alarm 00511 - Neither or both LR antenna position discretes present for more than 10 seconds.	When LR antenna has been commanded to position No. 2, 10 seconds elapse before LGC starts monitor for position No. 2. Alarm code 00511 will be generated after 10 additional seconds elapse pending absence or presence of both position discretes.
		RADAR: LDG ANT sw - HOVER Key KEY REL & RSET	
		3. Monitor FDAI & observe LGC-controlled pitchover through forward window.	Nominally, pitchover occurs approximately 8 minutes after start of powered descent at approximate altitude 8,635 ft.
		LGC commands yaw rotation to bring designated landing site in line with landing point designator scale on CDR's forward window. Approximate look angle is in R1.	Nominal look angle after pitchover is 39° to 44°.
		To perform manual altitude update of AEA: Key DEDA C 223+XXXXXE (100 ft)	XXXXX must be nonzero. Address contents are reset to zero by AEA within 2 seconds, thus allowing later updates.
		4. Select one of following: a. If presently designated landing site is acceptable, continue monitoring N64 & descent toward presently designated landing site. b. If presently designated landing site is not acceptable: Key PRO V06 N64	For site redesignation: a. Plus pitch reduces visibility of nominal landing site. b. Large redesignations should be made early in approach phase to conserve propellant and minimize attitude transients.

RC 1594

CREW-MAN	PNL	PROCEDURES	REMARKS
		4.10.2.2 Approach Phase Program (P64) (cont) ACA - manually align new landing site on CDR's window LPD scale ACA deflections in pitch (±) will result in 1° change in elevation from present LM landing site LOS. ACA deflections in roll (±) will result in 1° change in azimuth from present LM landing site LOS.	c. No LPD redesignations when TR (P64) equals zero seconds. d. Refer to onboard data for nominal altitude rate vs altitude.
		4.10.2.3 Landing Phase (ROD) Program (P66)	Purpose of Landing Phase (ROD) Program (P66) is to modify LM rate of descent in response to manual inputs, via DES RATE sw, to LGC, and to modify inertial attitude in response to manual inputs via ACA. In absence of manual control inputs, constant rate of descent and inertial attitude are maintained. P66 updates LM state vector with acceleration and landing radar data but inhibits landing radar updates below approximately 50 feet. S/C: PGNS sw - AUTO causes LGC to null horizontal velocity by tilting thrust vector of vehicle up to 20°. With S/C: PGNS sw - ATT hold, the desired attitude to arrest the horizontal velocities is displayed on the FDAI attitude error needles (modulo 20°). If desired: Key V06 N68E R1 Horizontal range (to landing site) XXXX.X nm R2 TG XXBXX min-sec R3 VI (Inertial velocity) XXXX.X fps Following DSKY display is available during powered landing, to support manual throttle operations. (Auto command is not available for display on THRUST ind during manual throttle.) V16 N92E R1 Desired auto throttle XXXXX% (may be >100% of FTP thrust) R2 H rate XXXX.X fps R3 H XXXXX feet This allows backup ROD method, whereby LGC-calculated thrust required to achieve descent rate commanded by DES RT sw can be displayed on DSKY for manual implementation (by either crewman) if required.

CREW-MAN	PNL	PROCEDURES	REMARKS
		4.10.2.3 Landing Phase (ROD) Program (P66) (cont)	
		1. Observe PROG ind - 66	P66 is automatically called during any phase of powered descent if S/C: PGNS sw - ATT HOLD and DES RATE sw - +1 FPS or -1 FPS, or from P64 when time TTF>TENDAPPR. Altitude rate at entry to P66 is maintained until modified by DES RATE sw inputs.
		2. FL V06 N60 R1 V (Forward) XXXX.X fps R2 H rate XXXX.X fps R3 H XXXXXX ft Poss PROG lt - on Key RSET Key V05 N09E (if feasible) 01466 - ≤ TOOFEW engine throttle commands computed since last omitted throttle computation Key KEY REL	TOOFEW is padloaded erasable quantity.
		To perform manual altitude update of AEA: Key DEDA C 223+XXXXXE (100 ft)	XXXXX must be nonzero. Address contents are reset to zero by AEA within 2 seconds, thus allowing later updates.
	5	3. Monitor descent: DES RATE sw - effect desired rate of descent	DES RATE sw establishes rate of descent in fixed increments; down (-) increases rate, up (+) decreases rate. Each actuation results in LGC change of 1 fps in rate of descent.
		ACA - rotate to desired attitude and/or landing site	Tilting descent engine thrust vector via ACA accelerates LM horizontally to rate that is maintained when thrust vector is returned to vertical.
		WARNING DES QTY warn lt will not be accompanied by MASTER ALARM; therefore, crewmen must monitor MPS: FUEL & OXID QUANTITY ind.	

THRUST

LM 3213, LM 3231

CREW-MAN	PNL	PROCEDURES	REMARKS
		4.10.2.3 Landing Phase (ROD) Program (P66) (cont)	
	1	4. Monitor CMD THRUST ind - ensure LGC throttle command is not >XX%	Only in extreme cases of negative rates and/or LM attitude with respect to local vertical will throttle setting be >XX%.
		5. If manual throttle control is desired: TTCA - move up until CMD THRUST ind - 10% ENG THR CONT: THR CONT sw - MAN	To reestablish LGC - controlled rate of descent: ENG THR CONT: THR CONT sw - AUTO
		6. If LGC nulling of horizontal velocity is desired: S/C: PGNS sw - AUTO	X-axis override is available.
		7. To return to manual control in pitch & roll: S/C: PGNS sw - ATT HOLD	
		8. When forward & lateral velocities <XX fps: VEL lt - on ALT lt - on	VEL and ALT lts - on as result of zero Doppler (tracking loss) when velocities are <XX fps, causing loss of velocity and range data-good.
	1,3	9. Monitor touchdown: LUNAR CONTACT lt - on Eng STOP pb/lt - push Stand by to abort stage if: LM tilt angle >XX° or LM tilt angle changing at >X°/sec	LUNAR CONTACT lt - on when LM is 5.6 feet above lunar surface.
	3	10. After LM is stabilized: ENG THR CONT: ENG ARM sw - OFF S/C: PGNS sw - ATT HOLD ACA - out of detent momentarily (to deactivate RCS thrusters if required) Record LM attitude. Key DEDA C 413+10000E (store AGS azimuth & set lunar surface flag) Perform Lunar Align: Key DEDA C 400+40000E	At this time, first lunar-stay/no-stay decision is made. For immediate emergency aborts on AGS, following landing shock that causes loss of AGS inertial reference, lunar alignment must be maintained for minimum of 30 seconds. (Azimuth would not be corrected. Safe pericynthion would be achieved.)
		Update AGS LM state vector to nominal landing site: Key DEDA C 414+20000E	Update assumes LM state vector and epoch time for nominal landing +X minutes have been previously loaded, Ref para 4.6.2.8.

LM 3207, LM 3213

CREW-MAN	PNL	PROCEDURES	REMARKS
		4.10.2.3 Landing Phase (ROD) Program (P66) (cont)	
		If not finished with FL V06 N60 display (to zero attitude errors): Key PRO	
		When Lunar-stay decision is made: Key V37E 68E	Landing Confirmation Program (P68) (para 4.10.2.4)
		4.10.2.4 Landing Confirmation Program (P68)	Purpose of Landing Confirmation Program (P68) is to terminate landing programs and initialize LGC for lunar surface operation. LGC zeroes attitude error, selects 5° deadband, computes and displays LM landing position, and commands DPS off.
		Requirements & switch positions for P68 are established in Braking Phase Program (P63) & subsequent powered-descent program.	P68 is selected only after LM has landed on lunar surface in P66. This program places DAP in minimum impulse command mode. If S/C: PGNS sw is kept in ATT HOLD, RCS jet firings will not occur even if platform is being gyro-torqued. NO DAP lt - on
		1. Key V37E 68E	Display of RR LOS azimuth and elevation angles (para 4.5.3.14) is available throughout program.
		2. FL V06 N43 - LM landing position R1 Latitude XXX.XX° R2 Longitude XXX.XX° R3 Altitude XXXX.X nm Record LM landing position data. Key PRO FL V37 N-- Key XXE	+ is north. + is east. Altitude above landing site; should = 0000.0 nm At this time, second lunar-stay/no-stay decision is made.
	1	3. DES ENG CMD OVRD sw - OFF Reset eng STOP pb/lt a. Release tab - push b. Eng STOP pb/lt - on	

THRUST

CREW-MAN	PNL	PROCEDURES	REMARKS
		4.10.2.4 Landing Confirmation Program (P68) (cont) c. If eng STOP pb/lt - off, verify that lights are functioning by performing Caution & Warning Array Checkout, steps 3 & 4 (para 4.2.10). If lights are functioning, inadvertent reset has taken place, eng is enabled, & steps d, e, & f should not be performed. d. Eng STOP pb/ lt - push e. Release tab - push f. Eng STOP pb/lt - off	
		4.10.3 POWERED ASCENT	
		4.10.3.1 Powered Ascent Program (P12) With AGS Followup/In Control	Purpose of Powered Ascent Program (P12) with AGS Follow-up/In Control is to display to crew, before ascent engine ignition: (a) certain LGC-stored parameters associated with powered ascent, for possible modification and (b) certain FDAI readings associated with early phases of powered ascent. P12 controls PGNCS during countdown, ignition, thrust, and thrust termination of powered ascent maneuver from lunar surface. P12 is to be selected at least 5 minutes before lift-off. Landing Analog Display Routine (R10) is enabled shortly after average g computations start. R10 is terminated on termination of average g.
		CAUTION V90 (used to request rendezvous out-of-plane display, R36) should not be called during P12.	R36, called by V90, is a coasting flight routine. If called during average g, it will cause OPR ERR lt - on.

LM 3231

CREW-MAN	PNL	PROCEDURES		REMARKS
		4.10.3.1 Powered Ascent Program (P12) With AGS Followup/In Control (cont)		
		MPS Basic (Staged) (required)	MPS Basic (Staged) (required)	Ref para 4.13.3.2.
		ECS Basic (Staged) (required)	ECS Basic (Staged) (required)	Ref para 4.13.1.1.
		ECS Periodic Monitoring (staged) (required)	ECS Periodic Monitoring (staged) (required)	Ref para 4.13.1.3.
		EPS Prestaging Check (required)	EPS Prestaging Check (required)	Ref para 4.12.5.
		CAUTION EPS Prestaging Check must be initiated 30 min before APS burn.		EPS Prestaging Check must be initiated 30 minutes before APS burn to provide conditioning of ascent batteries. This minimizes possibility of transients due to removal of descent batteries from line.
		APS Pressurization & Checkout (required)	APS Pressurization & Checkout (required)	Ref para 4.12.3.
		APS/RCS Propellant Interconnect (desired)	APS/RCS Propellant Interconnect (desired)	Ref para 4.13.3.3 or RCS Hot Firing Check procedure (para 4.2.31)
		LGC Power-Up (required)		Ref para 4.6.1.1.
		LGC Self-Test (required)		Ref para 4.6.1.13.
		LGC time valid (required)		LGC/CMC Clock Synchronization Routine (R33) (para 4.6.1.15)
		LGC state vector valid (required)		LGC Update Program (P27) (para 4.6.1.7) or Lunar Surface Navigation Program (P22) (para 4.8.3.1)
		IMU Power-Up (LGC Operating) (required)		Ref para 4.6.1.3. ISS should be on 15 minutes before thrusting maneuver.
		PGNCS Lunar Surface Align Program (P57) (required)		Ref para 4.9.3.1.
		DAP Data Load Routine (R03) (required)		Ref para 4.6.1.8.

THRUS

CREW-MAN	PNL	PROCEDURES		REMARKS
		4.10.3.1 Powered Ascent Program (P12) With AGS Followup/In Control (cont)		
		LGC targeted for orbital insertion before earth launch (required)		
			AGS Power-Up (required)	Ref para 4.6.2.1.
			AEA Self-Test (required)	Ref para 4.6.2.3.
			AGS time valid (required)	AGS Manual Absolute Time Initialization procedure (para 4.6.2.6) or AGS Initialization Routine (R47) (para 4.6.1.18)
			AGS LM state vector valid (required)	AGS Initialization Routine (R47) (para 4.6.1.18) or AGS Manual LM State Vector Update/Initialization procedure (para 4.6.2.7)
			AGS CSM state vector valid (required)	AGS Initialization Routine (R47) (para 4.6.1.18) or AGS Manual CSM State Vector Update/Initialization procedure (para 4.6.2.9)
			AGS alignment valid (required)	AGS Lunar Align procedure (para 4.9.3.2) PGNCS/AGS Align (para 4.9.2.1)
			AGS Wb Vector Update (required if mission warrants)	Ref para 4.6.2.15. (required for ascent from far westerly lunar landing sites.)
			AGS Lunar Surface Gyro Calibration (desired)	Ref para 4.6.2.16
				During this program, crew may monitor following: Key V16 N76E R1 VHF +XXXX.X fps R2 H rate F +XXXX.X fps R3 ΔR ±XXXX.X nm

CREW-MAN	PNL	PROCEDURES		REMARKS
		4.10.3.1 Powered Ascent Program (P12) With AGS Followup/In Control (cont)		
				VHF = Downrange velocity at injection H rate F = Radial velocity at injection ΔR = Crossrange distance to be removed to injection
		1. Establish attitude control: GUID CONT sw - PGNS S/C: PGNS sw - AUTO AGS sw - AUTO ROLL, PITCH, YAW sw - MODE CONT		Ref para 4.5.1.
		2. Establish PGNCS total attitude & attitude error display: ATTITUDE MON sw (1) - PGNS ATTITUDE MON sw (1) - AGS RATE/ERR MON sw (2) - LDG RDR/CMPTR Key V61E for mode I attitude error display or Key V62E for mode II attitude error display		Ref para 4.5.3.1 and 4.5.3.2. Mode I - DAP following errors. Mode II - Total attitude errors with respect to N22 angles (gimbal angles; display is scale limited).
		3. Establish velocity & altitude displays: RNG/ALT MON sw - ALT/ALT RT MODE SEL sw - PGNS or AGS		Ref para 4.5.3.8 and 4.5.3.9.
		4. Enable ACA/TTCA: ACA/4 JET sw (2) - ENABLE TTCA/TRANSL sw (2) - ENABLE THROTTLE/JETS cont (2) - JETS ACA PROP sw (2) - ENABLE ENG THR CONT: ATT/TRANSL sw - 4 JETS		

CREW-MAN	PNL	PROCEDURES		REMARKS
		4.10.3.1 Powered Ascent Program (P12) With AGS Followup/In Control (cont)		
		5. Prepare controls for APS burn: ENG THR CONT: ENG ARM sw - OFF Move switch guard to cover DES position Eng START pb/lt - off Eng STOP pb/lt (2) - reset ENG THR CONT: BAL CPL sw - ON S/C: DEAD BAND sw - MIN	1. Prepare AEA backup d-c power: a. If PGNCS is in control: CB (16) S/C: AEA - close CB (11) S/C: AEA - open	AEA backup d-c power circuit breaker should be open unless PGNCS has failed.
			b. If AGS is in control: CB (16) S/C: AEA - close CB (11) S/C: AEA - close	AEA backup d-c power circuit breaker should be closed if PGNCS has failed.
			If AGS in followup, go to AGS step 7.	
			2. Establish AGS attitude error & total attitude display: ATTITUDE MON sw (1) - AGS RATE/ERR MON sw (2) - LDG RDR/CMPTR	Ref para 4.5.3.3 and 4.5.3.4.
			3. Enable ACA/TTCA: ACA/4 JET sw (2) - ENABLE TTCA/TRANSL sw (2) - ENABLE THROTTLE/JETS cont (2) - JETS ACA PROP sw - ENABLE ENG THR CONT: ATT/TRANSL sw - 2 JETS	
			4. Establish velocity & altitude displays: RNG/ALT MON sw - ALT/ALT RT MODE SEL sw - PGNS or AGS	Ref para 4.5.3.8 and 4.5.3.9.
			5. Establish attitude control: GUID CONT sw - AGS S/C: AGS sw - AUTO ROLL, PITCH, YAW sw - MODE CONT	
			6. Prepare controls for APS burn: ENG THR CONT: ENG ARM sw - OFF Eng START pb/lt - off	

LM 3231

CREW-MAN	PNL	PROCEDURES		REMARKS
		4.10.3.1 Powered Ascent Program (P12) With AGS Followup/In Control (cont)		
			Eng STOP pb/lt (2) - reset ENG THR CONT: BAL CPL sw - ON S/C: DEAD BAND sw - MIN	
			7. Select desired yaw steering: a. Z-axis parallel to CSM orbit plane - Key DEDA C 623+00000E or b. Z-axis specified by Wb vector - Key DEDA C 623+10000E	
			8. Deleted	
			9. Verify orbit insertion mode: Key DEDA C 410+00000E	
			10. If AGS not in followup: Perform AGS Lunar Align 4 minutes before lift-off.	Ref para 4.9.3.2.
			11. Select guidance steering within 4 minutes of nominal lift-off time: Key DEDA C 400+10000E	If AGS Lunar Align procedure (para 4.9.3.2) was selected, it is terminated by this step.
			12. Display ΔVgx: Key DEDA C 500R (0.1/1 fps)	Parenthetical quantization notation: lunar mission/earth mission.
		6. Key V37E 12E Poss PROG lt - on Key V05 N09E - Call alarm 00210 - IMU not on		
				Perform IMU Power-Up (LGC Operating) procedure (para 4.6.1.3) Perform PGNCS Lunar Surface Align Program (P57) (para 4.9.3.1)
		00220 - ISS orientation not known Key KEY REL & RSET FL V37 N-- Key XXE - Exit P12		
		If desired crew may alter values of parameters DVTHRUSH & DVCNTR as follows: Key V21 N01E (01250E or 03515E respectively), (new data)E	If AGS in followup, go to AGS step 16.	Decision to alter these values and desired new values would be coordinated with, and received from, MSFN. Some or all values are octal and complemented values.

CREW-MAN	PNL	PROCEDURES	REMARKS
		4.10.3.1 Powered Ascent Program (P12) With AGS Followup/In Control (cont)	
		7. FL V06 N33 - TIG (AS) R1 00XXX hr R2 000XX min R3 0XX.XX sec Accept: Record value. Key PRO Reject: Key V25E - Load desired TIG (AS)	
		8. FL V06 N76 R1 VHF +XXXX.X fps R2 H rate F +XXXX.X fps R3 ΔR ±XXXX.X nm Accept: Coordinate with MSFN, key PRO Reject: Key V23E or V24E - Load desired values (coordinate with MSFN)	VHF = Downrange velocity at injection. H rate F = Radial velocity at injection. ΔR = Crossrange distance to be removed to injection. Initial value of VHF is +5509.5 fps; initial value of H rate F is +19.5 fps. 19.5 fps is (mission value for non-nominal lift-off time;+ 32 fps is mission value loaded for nominal lift-off time).
		9. Poss FL V50 N25 - Checklist R1 00203 - Switch to PGNCS automatic mode R2 ----- R3 ----- Redundant request or to reject:	LGC zeroes attitude errors and sets 1° deadband in DAP at this time. Discrete in or to LGC may have failed.

CREW-MAN	PNL	PROCEDURES		REMARKS
		4.10.3.1 Powered Ascent Program (P12) With AGS Followup/In Control (cont)		
		Key ENTR Proper request and to accept: GUID CONT sw - PGNS S/C: PGNS sw - AUTO Key PRO		
		10. V06 N74 R1 TFI XXBXX min-sec R2 Yaw XXX.XX° R3 Pitch XXX.XX°		Yaw and pitch angles are predicted FDAI angles at completion of yaw and pitch maneuvers during ascent. Yaw is angle at completion of yaw maneuver, which brings +Z-axis down-range, during vertical rise phase. Pitch is angle at completion of pitch maneuver during pitchover phase. Displays are blanked from TFI = -00B35 to -00B30. Beginning and duration of blanking cannot be defined if alarm 01703 occurs.
		CMPTR ACTY lt - on		CMPTR ACTY lt - on during State Vector Integration Routine (R41).
		Monitor PROG lt from TFI = -00B50 to -00B35. If PROG lt - on: Key V05 N09E - Call alarm 01703 - TIG slipped		TIG will be slipped as required, to get state vector integration to new TIG-30 seconds.
		Key KEY REL & RSET CMPTR ACTY lt - off		State vector integration complete.
		Record yaw & pitch		
		Update EVNT TMR ind if desired or if TFI was slipped.		
		Check CWEA status.		

CREW-MAN	PNL	PROCEDURES		REMARKS
		4.10.3.1 Powered Ascent Program (P12) With AGS Followup/In Control (cont)		
		ED: MASTER ARM sw - ON CB (11) S/C: AELD - close CB (16) S/C: AELD - close	13. ED: MASTER ARM sw - ON CB (11) S/C: AELD - close CB (16) S/C: AELD - close	
		11. At TFI = -00B35: VERB ind, NOUN ind, R1, R2, & R3 blank for 5 sec		
		12. At TFI = -00B29 V06 N74 R1 TFI 00BXX min-sec R2 Yaw XXX.XX° R3 Pitch XXX.XX°		Average-g integration has started.
		13. At TFI = -00B05 FL V99 N74 - Perform eng-on enable R1 TFI 00BXX min-sec R2 Yaw XXX.XX° R3 Pitch XXX.XX° To terminate: Key V34E To enable eng on: ENG THR CONT: ENG ARM sw - ASC Key PRO If thrust has failed after partial orbit insertion, complete maneuver with RCS. Key ENTR - Go to step 25.		During FL V99 N74, brief FL V06 may appear intermittently; this should be disregarded.
		14. If TFI is negative and nonzero: V06 N74 R1 TFI 00BXX min-sec R2 Yaw XXX.XX° R3 Pitch XXX.XX°	14. ENG THR CONT: ENG ARM sw - ASC	Provides redundant arming signal and establishes conditions for automatic shutdown with eng START pb lt pressed.
		15. ABORT STAGE pb - push		
		16. When TFI = 00B00: Monitor APS thrust		

LM 3231

CREW-MAN	PNL	PROCEDURES		REMARKS
		4.10.3.1 Powered Ascent Program (P12) With AGS Followup/In Control (cont)		
		When thrust is detected: Eng START pb/lt - push	15. Initiate AGS-controlled lift-off at nominal lift-off time: ABORT STAGE pb - push When thrust is detected: Eng START pb/lt - push	Protects against single-point engine shutdown failure.
		17. DPS/APS Thrust Fail Routine (R40) If LGC detects thrust fail: FL V97 NXX - Perform engine fail procedure R1 XXXXX R2 XXXXX R3 XXXXX Alternatives to fail procedure: a. Verify LGC interpretation of thrust failure. Key PRO b. Attempt completion of maneuver: Key ENTR, return to step 13 c. Terminate: Key V34E - Exit P12 FL V37 N-- Key XXE To switch to AGS: GUID CONT sw - AGS Go to AGS step 16.		R40 is called at nominal ignition time and remains active until engine cutoff. R40 monitors PIPA outputs and initiates engine fail procedures if thrust fail is detected. Engine thrust fails when PIPA detects ΔV of <10.1 fps (308 cm/sec) for five consecutive sampling periods of 2 seconds each, after nominal ignition time. Engine thrust also fails if, during thrusting period, ΔV is less than this threshold for two consecutive sampling periods of 2 seconds each. During FL V97 NXX, brief FL V06 may appear intermittently. This should be disregarded.
		18. V06 N94 R1 VGX (LM) XXXX.X fps R2 H rate XXXX.X fps R3 H XXXXX ft Monitor FDAI & N94 displays. Observe LM X-axis comes to local vertical. Observe LM yaw maneuver to recorded yaw angle.	16. Monitor FDAI, ALT/ALT RT ind, & ΔVgx. Observe LM X-axis comes to local vertical. Observe LM yaw maneuver to recorded yaw angle.	VGX (LM) - Velocity to be gained in X-body coordinate. X-axis override is inhibited. Yaw maneuver brings +Z-axis down-range.

LM 3198, LM 3229, LM 3231

CREW-MAN	PNL	PROCEDURES		REMARKS
		4.10.3.1 Powered Ascent Program (P12) With AGS Followup/In Control (cont)		
		When H rate ≥ +40:	When ALT RATE ind - > 50 fps: Observe LM pitchover maneuver.	H rate of +40 fps is achieved approximately 12 seconds after lift-off.
		Observe LM pitch maneuver to recorded pitch angle.		Twelve seconds after pitchover maneuver begins, X-axis override is enabled.
		At lift-off + 1 min, yaw right as required for S-band track.	At lift-off + 1 min, Key DEDA C623+10000E	LM yaw angle, to maintain S-band track, is landing site dependent
		19. Continue monitoring N94 displays & FDAI:	17. Continue monitoring ΔVgx, ALT/ALT RATE ind, & FDAI:	If desired, additional LGC parameters may be displayed:
		VI should be increasing. H rate should increase to approximately 200 fps & then decrease to 32/19.5 fps.	ΔVgx should be decreasing.	Key V16 N77E R1 TG XXBXX min-sec R2 VGY (LM) XXXX.X fps R3 VI +XXXX.X fps
			ALT RATE ind should increase to approximately 200 fps & then decrease to 32/19.5 fps.	TG = Estimated time of flight from present time to accomplishment of ascent injection conditions. VGY (LM) = Velocity to be gained in Y-body coordinate. VI = Inertial velocity.
		Attitude errors should be ≤XX°.	ALT ind should be increasing	
		Attitude rates should be ≤XX°/sec.	Attitude errors should be ≤XX°.	When finished with display: Key KEY REL
			Attitude rates should be ≤XX°/sec.	Key N76E R1 VHF +XXXX.X fps R2 H rate F +XXXX.X fps R3 ΔR ±XXXX.X nm VHF = Downrange velocity at injection H rate F = Radial velocity at injection ΔR = Crossrange distance to be removed to injection Key KEY REL
			If AGS in followup, go to AGS step 25.	
		20. When TG ≤00B25 min-sec, perform APS/RCS Propellant Interconnect, steps 4 & 5.	18. When ΔVgx ≤500 fps, perform APS/RCS Propellant Interconnect, steps 4 & 5.	Ref para 4.13.3.3.

CREW-MAN	PNL	PROCEDURES		REMARKS
		4.10.3.1 Powered Ascent Program (P12) With AGS Followup/In Control (cont)		
		21. ENG THR CONT: ENG ARM sw - OFF	19. ENG THR CONT: ENG ARM sw - OFF	Removes manual engine-on signal and thus enables automatic shutdown.
		22. Monitor N94 or N77 for automatic shutdown. Shutdown should occur when TG $\leq$1 sec If shutdown does not occur: ABORT STAGE pb - reset	20. Monitor Vgx for automatic shutdown. Shutdown should occur when Vgx $\leq$10 fps If shutdown does not occur: ABORT STAGE pb - reset	
			21. Reestablish ullage counter threshold: Key DEDA C 616+0000YE	Y is determined from following: Remaining Fuel / Total Burn Time (sec) / 2 Jets (B) / 4 Jets 100% to / 0 to / 2 / 2 50% / 228 40% / 274 / 4 / 3 30% / 319 / 5 / 4 20% / 365 / 6 / 4 $<$10% / $>$410 / 7 / 5
		23. After automatic shutdown: Eng STOP pb/lt - push	22. After automatic shutdown: Eng STOP pb/lt - push	Required to reset manual engine start relays.
		24. Disarm eng & remove ED power: ABORT STAGE pb - reset Reset eng STOP pb/lt: a. Release tab - push b. Verify eng STOP pb/lt - on c. If eng STOP pb/lt - off, verify that lights are functioning by performing Caution & Warning Array Checkout, Steps 3 & 4 (para 4.2.10). If lights are functioning, inadvertent reset has taken place, engine is enabled, & steps d, e, & f should not be performed. d. Eng STOP pb/lt - push e. Release tab - push	23. Disarm eng & remove ED power: ABORT STAGE pb - reset Reset eng STOP pb/lt: a. Release tab - push b. Eng STOP pb/lt - on c. If eng STOP pb/lt - off, verify that lights are functioning by performing Caution & Warning Array Checkout, steps 3 & 4 (para 4.2.10). If lights are functioning, inadvertent reset has taken place, & engine is enabled, & steps d, e, & f should not be performed. d. Eng STOP pb/lt - push e. Release tab - push	

CREW-MAN	PNL	PROCEDURES		REMARKS
		4.10.3.1 Powered Ascent Program (P12) With AGS Followup/In Control (cont)		
		f. Verify eng STOP pb/lt - off CB ED: LOGIC PWR A - open CB ED: LOGIC PWR B - open	f. Eng STOP pb/lt - off CB ED: LOGIC PWR A - open CB ED: LOGIC PWR B - open	CB ED: LOGIC PWR A and B are opened to remove power from EDS since ED: MASTER ARM sw is left on to inhibit spurious CWEA indications.
		CAUTION Avoid touching ascent engine cover top or side with bare hand or glove from 5 min to 7.5 hr after APS burn. Maximum temperature of 220°F will be reached 1.5 hr after APS burn.		
		25. FL V16 N94 R1 VGX (LM) XXXX.X fps R2 H rate XXXX.X fps R3 H . +XXXXX ft Record values. Key PRO		VGX (LM) - Velocity to be gained in X-body coordinate. LGC zeroes attitude errors and sets 0.3° deadband in DAP at this time.
		26. FL V16 N85 - VG (LM) R1 X XXXX.X fps R2 Y XXXX.X fps R3 Z XXXX.X fps		
		If nulling of VG is desired: S/C: PGNS sw - ATT HOLD ACA & TTCA - null VGX, VGY, VGZ		Two-jet translation is recommended to be selected through R03. If not selected through R03, translation will be four-jet.
			24. Trim ΔV residual: Verify AEA attitude hold submode: Key DEDA C 400R If +00000 not displayed: Key DEDA C 400+00000E S/C: DEAD BAND sw - MIN ENG THR CONT: BAL CPL sw - ON Read and record: ΔVgx Key DEDA C 500R (0.1/1 fps) ΔVgy Key DEDA C 501R (0.1/1 fps) ΔVgz	If trim maneuver is performed after use of orbit insertion routine, it should be performed immediately after engine shutdown. Orbit insertion routine drives LM to specific point on desired orbit, and residual ΔVgx will increase naturally after engine shutdown.

CREW-MAN	PNL	PROCEDURES	REMARKS
		4.10.3.1 Powered Ascent Program (P12) With AGS Followup/In Control (cont)	
		Key DEDA C 502R (0.1/1 fps)	
		Read out and null ΔVg residuals in order of magnitude, largest first.	Null ΔVgx by moving TTCA up or down. Up TTCA nulls positive ΔVgx. Null ΔVgy by moving TTCA right or left. Right TTCA nulls positive ΔVgy. Null ΔVgz by moving TTCA in or out. In TTCA nulls positive ΔVgz.
		25. Read out predicted perifocus altitude: Key DEDA C 403R (0.1 nm) Compare with PGNCS Hp value.	
		26. Read out apofocus altitude: Key DEDA C 315R (0.1 nm) Compare with PGNCS Ha value.	
		27. Terminate P12 or select Orbit Parameters Display Routine (R30): a. Terminate: Key PRO FL V37 N-- Key XXE - Exit P12	At this time, LGC restores crew-specified (R03) deadband limits in RCS DAP.
		or	
		b. Select R30: Key V82E Poss OPR ERR lt - on Exit R30 - Key RSET - FL V16 N44 R1 Ha XXXX.X nm R2 Hp XXXX.X nm R3 TFF XXBXX min-sec When finished with display: Key PRO, exit R30 Reestablish N85 display Key PRO FL V37 N-- Key XXE - Exit P12	Orbit parameters are automatically recomputed every 2 seconds while average g is in process. OPR ERR lt - on if another extended verb from R76 is active. Maximum TFF reading is 59B59. After final PRO, deadband selected by R03 is restored.

CREW-MAN	PNL	PROCEDURES		REMARKS
		4.10.3.1 Powered Ascent Program (P12) With AGS Followup/In Control (cont)		
		28. Deleted	27. Deleted	
		4.10.3.2 DPS Abort (LGC P70, AEA 410+00000)		Purpose of this procedure is to control LM during DPS abort/orbit insertion from powered descent. P70 and 410+00000 provide PGNCS-/AGS-controlled DPS abort from powered descent (P63, P64, or P66).
		Prerequisites are same as for Braking Phase Program (P63) With AGS Preparation for Orbit Insertion (410+00000).		Ref para 4.10.2.1.
		Switching configuration is same as that established during powered descent, from which this procedure is entered.		During this program, crew may monitor following: Key V16 N76E R1 VHF +XXXX.X fps R2 H rate F +XXXX.X fps R3 ΔR ±XXXX.X nm VHF = Downrange velocity at injection H rate F = Radial velocity at injection ΔR = Crossrange distance to be removed to injection. Maximum allowable crossrange value is constrained to 0.5° (approximately 8 nm).
			If AGS in followup, go to AGS step 5.	
			1. To initiate DPS abort on AGS: GUID CONT sw - AGS CB (11) S/C: AEA - close	When aborting on AGS, AEA backup d-c cb should be closed to guard against AEA restart.

LM 3231

CREW-MAN	PNL	PROCEDURES		REMARKS
		4.10.3.2 DPS Abort (LGC P70, AEA 410+00000) (cont)		
			If S/C: AGS sw - AUTO, go to AGS step 3.	Following conditions were established in powered descent and should be restablished if modified for any reason: a. 410+00000 (Orbit Insertion) b. 400+10000 (Guidance Steering) c. S/C: DEADBAND sw - MIN ROLL, PITCH, YAW sw - MODE CONT d. DES ENG CMD OVRD sw - ON This condition (d) may not have been established if abort occurred early in powered descent. Establishing this condition would eliminate a possible AGS-commanded engine-off in step 4.
			2. If S/C: AGS sw - ATT HOLD: a. ACA - maneuver +X-axis above horizontal b. TTCA - move up to FTP MODE SEL sw - AGS ATTITUDE MON sw - AGS c. ACA - maneuver +X-axis to local vertical If desired to continue in AGS automatic, go to AGS step 3. d. When altitude >25,000 ft or altitude rate >50 fps, ACA - pitchover to local horizontal (posigrade) e. S/C: AGS sw - AUTO go to AGS step 4.	

LM 3221, LM 3228

CREW-MAN	PNL	PROCEDURES		REMARKS
		4.10.3.2 DPS Abort (LGC P70, AEA 410+00000) (cont)		
			3. If S/C: AGS sw - AUTO a. Monitor +X-axis above horizontal b. TTCA - move up to FTP MODE SEL sw - AGS ATTITUDE MON sw - AGS c. Monitor +X-axis to local vertical d. When altitude ≥25,000 ft or altitude rate ≥50 fps: Monitor pitchover to local horizontal (posigrade)	
		1. To initiate DPS abort on PGNS:		If total thrust failure has occurred, manual translation must be applied before selecting P70 and must remain applied until P70 automatically commands engine on.
		Program 70 may be called in two ways:		Detected by Abort Discretes Monitor Routine (R11). R11 then calls P70.
		CAUTION If channel 30 backup code (R2 of R46) has been set (000 X 1) to ignore ABORT (& ABORT STAGE) discrete(s) do both a & b below:		
		a. ABORT pb - push or b. Key V37E 70E Poss OPR ERR lt - on, exit P70 TTCA - move up to FTP ENG THR CONT: THR CONT sw - AUTO S/C: PGNS sw - AUTO		Program incorrectly selected. Attitude deadband is automatically set to 1.0° at this time.
		2. Observe full DPS thrust	4. ABORT pb - push Poss DPS shutdown (if very early in powered descent and DES ENG CMD OVRD sw - OFF) a. Perform AGS Orientation to Initial Computed Steering Attitude b. Perform step 9.b.	Considered possible, but unlikely because of choice of parameters in variable horizontal velocity targeting. Ref para 4.6.2.13.

RC 1592, LM 3231

CREW-MAN	PNL	PROCEDURES		REMARKS
		4.10.3.2 DPS Abort (LGC P70, AEA 410+00000) (cont)		
		3. DPS/APS Thrust Fail Routine (R40) If LGC detects thrust fail: FL V97 NXX - Perform engine fail procedures R1 XXXXX R2 XXXXX R3 XXXXX Alternatives to fail procedure: a. Verify LGC interpretation of thrust failure: Key PRO		In case of premature engine shutdown or ΔV of <11.68 fps (356 cm/sec) for one 2 second cycle, when configured: GUID CONT sw - PGNS and S/C: PGNS sw - AUTO, LM will enter mode of free drift rather than maintaining its last attitude. S/C: PGNS sw - ATT HOLD will not eliminate free drift condition. This is due to LGC repeatedly setting CDU desired equal to CDU actual. This mode of operation is continued until thrust-fail procedure of 3b or 3c is followed, if due to premature shutdown; or until thrust is increased to bring acceleration above the threshold, if due to low manual throttle setting. R40 is called a nominal ignition time and remains active until engine cutoff. R40 monitors PIPA outputs and initiates engine fail procedures if thrust failure is detected. Engine thrust fails when PIPA detects ΔV to be <1.18 fps (36 cm/sec) for five consecutive sampling periods of 2 seconds each after nominal ignition time. Engine thrust also fails if, during thrusting period, ΔV is less than this threshold for two consecutive sampling periods of 2 seconds each.
		b. Attempt completion of maneuver Key ENTR FL V99 - Perform engine-on enable R1 XXXXX R2 XXXXX R3 XXXXX To enable main engine burn: Key PRO, exit R40 TTCA - adjust as desired after ignition To attempt completion of manuever by RCS: Key ENTR go to step 13.		During FL V97 N63, a brief FL V06 or V99 may appear intermittently. This should be disregarded. DPS automatic throttle is now set to minimum. Any further DPS throttle control must be performed manually.

CREW-MAN	PNL	PROCEDURES	REMARKS
		4.10.3.2 DPS Abort (LGC P70, AEA 410+00000) (cont)	
		c. Terminate: Key V34E - Terminate FL V37 N-- or ABORT STAGE pb - push Exit P70 and R40, go to APS Abort (LGC P71, AEA 410+00000)	Ref para 4.10.3.3.
		4. DES ENG CMD OVRD sw - ON	Provides redundant engine-on signal.
		5. Poss FL V50 N25 R1 00203 - Switch guidance control to PGNS/automatic mode R2 ----- R3 ----- a. GUID CONT sw - PGNS S/C: PGNS sw - AUTO ENG THR CONT: THR CONT sw - AUTO Key PRO b. If mode already selected: Key ENTR	
		6. V06 N94 R1 VGX (LM) XXXX.X fps R2 H rate XXXX.X fps R3 H XXXXX ft	VGX (LM) - Velocity to be gained in X-body coordinate. H rate - Altitude rate; - indicates descent, + indicates ascent H - Altitude with respect to landing site radius; + indicates altitude greater than radius.
		7. Monitor thrusting: VI should be increasing. H rate should remain positive and increase to = XXX fps, then decrease to 19.5 fps. H should be increasing. CMD THRUST ind - 10% ENG THRUST ind - FTP FDAI - Attitude errors should be <XX° - Attitude rates should be <XX°/sec	If H >25,000 feet, LGC will maneuver LM to orbit insertion attitude. If H <25,000 feet, LGC will inhibit X-axis override and maneuver LM to local vertical with +Z-axis downrange until H >25,000 feet or until H rate >40 fps, then pitch to orbit insertion attitude and restore X-axis override.

LM 3231

CREW-MAN	PNL	PROCEDURES		REMARKS
		4.10.3.2 DPS Abort (LGC P70, AEA 410+00000) (cont)		
			5. Key DEDA C 500R (0.1 fps) & continue monitoring ΔVgx, ALT & ALT RATE ind, & FDAI: ΔVgx should be decreasing. ALT RATE ind should increase to approx 200 fps, then decrease to 19.5 fps. ALT ind should be increasing. Attitude errors should <XX°. Attitude rates should <XX°/sec.	
		8. Check propellant remaining against propellant required & make staging decision. Note quantity (%) remaining: MPS: FUEL QUANTITY ind ___ % MPS: OXID QUANTITY ind ___ % At 5.6% remaining: DES QTY warn lt - on	6. Check propellant remaining against propellant required & make staging decision. Note quantity (%) remaining: MPS: FUEL QUANTITY ind ___ % MPS: OXID QUANTITY ind ___ % At 5.6% remaining: DES QTY warn lt - on	Propellant flow rate at FTP is 5.5 seconds per 1% change (or 11 seconds per 2% change). Stage if: 1. Malfunction is detected in DPS. 2. Propellant depletion occurs. 3. Engine cutoff occurs with ΔVg larger than that which can be trimmed by RCS.
		9. If desired: Key V16 N77E R1 TG XXBXX min-sec R2 VGY(LM) XXXX.X fps R3 VI +XXXX.X fps To terminate display: Key KEY REL V06 N94 R1 VGX(LM) XXXX.X fps R2 H rate XXXX.X fps R3 H XXXXX ft Key V16 N85E VG (LM) R1 X XXXX.X fps R2 Y XXXX.X fps R3 Z XXXX.X fps To terminate display: Key KEY REL		TG - Estimated time of flight from present time to accomplishment of ascent injection conditions, polarity is minus (-). VGY(LM) - Velocity to be gained in Y-body coordinate. VI - Inertial velocity. VGX(LM) - Velocity to be gained in X-body coordinate. VG (LM) - Velocity to be gained.

CREW-MAN	PNL	PROCEDURES		REMARKS
		4.10.3.2 DPS Abort (LGC P70, AEA 410+00000) (cont)		
			7. If DPS propellant is sufficient to achieve orbit insertion: Monitor for normal automatic DPS shutdown. Read out desired parameters: Horizontal velocity - Key DEDA C 427R (0.1 fps) Altitude rate - Key DEDA C 367R (0.1 fps) Altitude Key DEDA C 337R (0.1 nm) Monitor ΔVgx Key DEDA C 500R (0.1 fps)	At automatic shutdown: Horizontal velocity is variable. Altitude rate is 19.5 fps. ΔVgx (500) = 0 fps.
		10. Before TG <1 sec: DES ENG CMD OVRD sw - OFF	8. When horizontal velocity approaches shutoff criterion: DES ENG CMD OVRD sw - OFF	Enables automatic engine shutdown.
		11. If engine automatic shutdown does not occur when TG <1 sec: Eng STOP pb/lt - push		
		12. After shutdown, disarm DPS: ABORT pb - reset ENG THR CONT: ENG ARM sw - OFF Reset eng STOP pb/lt: a. Release tab - push b. Eng STOP pb/lt - on c. If Eng STOP pb/lt - off, verify light is functioning by performing Caution & Warning Array Checkout, steps 3 & 4. If light is functioning, inadvertent reset has taken place, eng is enabled & steps d, e, & f should not be performed.		Ref para 4.2.10.

CREW-MAN	PNL	PROCEDURES		REMARKS
		4.10.3.2 DPS Abort (LGC P70, AEA 410+00000) (cont)		
		d. Eng STOP pb/lt - push e. Release tab - push f. Eng STOP pb/lt - off		
		13. FL V16 N94 R1 VGX (LM) XXXX.X fps R2 H rate XXXX.X fps R3 H XXXXX ft Key PRO		VGX (LM) - Velocity to be gained in X-body coordinate. LGC zeroes attitude errors and sets 0.3° deadband in DAP at this time.
		14. FL V16 N85 VG (LM) R1 X XXXX.X fps R2 Y XXXX.X fps R3 Z XXXX.X fps If nulling of VG is desired: S/C: PGNS sw - ATT HOLD THROTTLE/JETS cont (CDR & LMP) - JETS ACA/TTCA - null VGX, VGY, VGZ		Two-jet translation is recommended to be selected through R03. If not selected via R03, translation will be four-jet.
			9. Cutoff possibilities: a. If cutoff does not occur at appropriate point (late cutoff): Eng STOP pb/lt - push ABORT pb - reset ENG Thr CONT: ENG ARM sw - OFF Reset eng STOP pb/lt: a. Release tab - push b. Eng STOP pb/lt - on c. If eng STOP pb/lt - off, verify light is functioning by performing Caution & Warning Array Checkout, steps 3 & 4. If light is functioning, an inadvertent reset has taken place, eng is enabled, & steps d, e, & f should not to be performed. d. Eng STOP pb/lt - push e. Release tab - push f. Eng STOP pb/lt - off	Ref. para. 4.2.10.

THRUS

CREW-MAN	PNL	PROCEDURES	REMARKS
		4.10.3.2 DPS Abort (LGC P70, AEA 410+00000) (cont)	
		b. If cutoff is early:	
		1) To perform DPS burn: Key DEDA 616+000YY E TTCA - move up for 2YY+1 sec Eng START pb/lt - push	Ullage time is 2Y seconds depending on ullage volume. Y is determined from the following chart: Remaining fuel / 2 Jets (B) / 4 Jets 100% to 25% / 4 / 3 20% / 7 / 5 15% / 8 / 6 10% / 11 / 8 6% / 12 / 8 3% / 13 / 9 Do not restart MPS if ΔVg is <30 fps.
		2) If DPS start does not occur or to perform APS burn: Go to APS Abort (LGC P71, AEA 410+00000) with AGS in control	Engine must be stopped with ENG STOP pb/lt if it is started with ENG START pb/lt.
		3) To perform RCS burn: Go to AGS step 10	
		c. If cutoff occurs at normal point: ENG THR CONT: ENG ARM sw - OFF ABORT pb - reset	
		10. Trim ΔV residual. Verify AEA attitude hold submode. Key DEDA C 400R If +00000 not displayed: Key DEDA C 400+00000E S/C: DEAD BAND sw - MIN	If this trim maneuver is performed after use of orbit insertion routine, it should be performed immediately after engine shutdown. Orbit insertion routine drives LM to specific point on desired orbit and residual ΔVgx will increase naturally after engine shutdown.

LM 320., LM 3231

CREW-MAN	PNL	PROCEDURES		REMARKS
		4.10.3.2 DPS Abort (LGC P70, AEA 410+00000) (cont)		
			Read and record: ΔVgx Key DEDA C 500R (0.1/1 fps) ΔVgy Key DEDA C 501R (0.1/1 fps) ΔVgz Key DEDA C 502R (0.1/1 fps)	
			Read out and null ΔVg residuals in order of magnitude, largest first.	Null ΔVgx by moving TTCA up or down. Up TTCA nulls positive ΔVgx. Null ΔVgy by moving TTCA right or left. Right TTCA nulls positive ΔVgy. Null ΔVgz by moving TTCA in or out. In TTCA nulls positive ΔVgz.
			S/C: DEAD BAND sw - MAX	
		15. Terminate P70 or select Orbit Parameter Display Routine (R30): a. Terminate: Key PRO FL V37 N-- Key XXE, exit P70 or b. Select R30: To minimize RCS propellant usage in LGC selected narrow deadband, select minimum impulse Key V76E No DAP lt - on S/C: PGNS sw - ATT HOLD Key V82E FL V16 N44 R1 Ha XXXX.X nm R2 Hp XXXX.X nm R3 TFF XXBXX min-sec		Ha - apolune altitude Hp - perilune altitude TFF - Time of free fall to 35,000 feet. If Hp >35,000 ft, TFF = -59B59.

CREW-MAN	PNL	PROCEDURES	REMARKS
		4.10.3.2 DPS Abort (LGC P70, AEA 410+00000) (cont)	
		If display of time Hp is desired: Key N32E R1 00XXX hr R2 000XX min R3 0XX.XX sec When finished with display: Key KEY REL Key PRO to reestablish N85 display, exit R30 Key PRO F1 V37 N-- Key XXE, exit P70	Orbit parameters are automatically recomputed every 2 seconds while average g is in process.
		11. Read out perilune altitude: Key DEDA C 403R (0.1 nm) Compare with PGNS Hp value. 12. Readout apolune altitude: Key DEDA C 315R (0.1 nm) Compare with PGNCS Ha value.	
		4.10.3.3 APS Abort (LGC P71, AEA 410+00000)	Purpose of this procedure is to control LM during APS abort/orbit insertion from powered landing descent or continuation of abort begun on DPS. P71/410+00000 provides PGNCS/AGS controlled abort from powered descent (P63, P64, P66, or P70).
		Prerequisites are same as for Braking Phase Program (P63) with AGS Preparation for Orbit Insertion (410+00000).	Ref para 4.10.2.1.
		Switching configuration is same as that established during powered descent, from which this procedure was entered.	

CREW-MAN	PNL	PROCEDURES	REMARKS
		4.10.3.3 APS Abort (LGC P71, AEA 410+00000) (cont)	
		If AGS in followup, go to AGS step 3. or If continuing AGS abort started on DPS, go to step 1c.	During this program, crew may monitor following: Key V16 N76E R1 VHF XXXX.X fps R2 H rate F XXXX.X fps R3 ΔR XXXX.X nm VHF = Downrange velocity at injection. H rate F = Radial velocity at injection ΔR = Crossrange distance to be removed to injection. Maximum allowable crossrange value is constrained to 0.5° (approximately 8 nm).
		1. To initiate APS abort on AGS:	Following conditions were established in powered descent and should be reestablished if modified for any reason: a. 410+00000 (Orbit Insertion) b. 400+10000 (Guidance Steering) c. S/C: DEAD BAND sw - MIN ROLL, PITCH, YAW sw - MODE CONT
		a. GUID CONT sw - AGS CB (11) S/C: AEA - close	When aborting on AGS, AEA backup d-c cb should be closed to guard against AEA restart.
		b. S/C: AGS sw - AUTO	
		c. ABORT STAGE pb - push To achieve ullage: TTCA (LMP) - move up	
		d. Monitor +X-axis above horizontal	

RC 1606

CREW-MAN	PNL	PROCEDURES		REMARKS
		4.10.3.3 APS Abort (LGC P71, AEA 410+00000) (cont)		
			e. MODE SEL sw - AGS ATTITUDE MON sw - AGS	
			f. If initiating abort on APS: monitor +X-axis to local vertical	
			g. When altitude $\geq$ 25,000 ft or altitude rate $\geq$ 50 fps, monitor pitchover to local horizontal (Posigrade)	
		1. P71 may be called in three ways: If channel 30 backup code (R2 of N46) has been set (000 X 1) to ignore (ABORT &) ABORT STAGE discrete(s) do a, below (otherwise do b or c).		
		a. ABORT STAGE pb - push Key V37E 71E		Detected by Abort Discretes Monitor Routine (R11) which then calls P71.
		or		
		b. ABORT STAGE pb - push		
		or		
		c. Backup to ABORT STAGE pb & its functions: 1) Eng STOP pb/lt - push ED: MASTER ARM sw - ON ASC He SEL sw - BOTH ASC He PRESS sw - FIRE ENG THR CONT: ENG ARM sw - ASC		Steps 1b.1 and 1b.2 must be performed before keying in P71. Eng STOP pb/lt is pushed to shutdown DPS.
		2) Reset eng STOP pb/lt: a. Release tab - push b. Eng STOP pb/lt - on		

RC 16

CREW-MAN	PNL	PROCEDURES	REMARKS
		4.10.3.3 APS Abort (LGC P71, AEA 410+00000) (cont) c. If eng STOP pb/lt - off, inadvertent reset has taken place, eng is enabled, & steps d, e, & f should not be performed. d. Eng STOP pb/lt - push e. Release tab - push f. Eng STOP pb/lt - off	

THRUST

LM 3231

CREW-MAN	PNL	PROCEDURES	REMARKS
		4.10.3.3 APS Abort (LGC P71, AEA 410+00000) (cont)	
		3) THROTTLE/JETS cont (CDR)-JETS TTCA (CDR) - move up & hold while keying DSKY V37E 71E Poss OPR ERR lt - on, exit P71	Program incorrectly selected. (Either previous program not P63, P64, P66, or P70; or LGC failure - If latter: go to AGS step 1.)
		2. S/C: PGNS sw - AUTO	Attitude deadband is automatically set to 1.0° at this time.
		3. DPS/APS Thrust Fail Routine (R40) If LGC detects thrust fail:	In case of premature engine shutdown, when configured: GUID CONT sw - PGNS and S/C: PGNS sw - AUTO, LM will enter mode of free drift rather than maintaining its last attitude. S/C: PGNS sw - ATT HOLD will not eliminate free drift condition. This is due to LGC repeatedly setting CDU desired equal to CDU actual. This mode of operation is continued until thrust-fail procedure of 4b or 4c is followed.
		FL V97 NXX - Perform engine fail procedures R1 XXXXX R2 XXXXX R3 XXXXX	During FL V97 N63, a brief FL V06 or V99 may appear intermittently. This should be disregarded.
		Alternative to fail procedure: a. Verify LGC interpretation of thrust failure: Key PRO	R40 is called at nominal ignition time and remains active until engine cutoff. R40 monitors PIPA outputs and initiates engine fail procedures if thrust failure is detected. Engine thrust fails when PIPA detects ΔV to be <10.1 fps (308 cm/sec) for five consecutive sampling periods of 2 seconds each after nominal ignition time. Engine thrust also fails if, during thrusting period, ΔV is less than
		b. Attempt completion of maneuver: Key ENTR FL V99 NXX - Perform engine-on enable R1 XXXXX R2 XXXXX R3 XXXXX	

RC 1606

CREW-MAN	PNL	PROCEDURES		REMARKS
		4.10.3.3 APS Abort (LGC P71, AEA 410+00000) (cont)		
		To enable main engine burn: Key PRO, exit R40 To attempt completion of maneuver by RCS: Key ENTR, go to step 15		this threshold for two consecutive sampling periods of 2 seconds each.
		c. Terminate: Key V34E - Terminate FL V37 N-- Key XXE, exit P71 and R40 ENG THR CONT: ENG ARM sw - OFF		
		4. ENG THR CONT: ENG ARM sw - ASC Eng START pb/lt - push	2. ENG THR CONT: ENG ARM sw - ASC Eng START pb/lt - push	Provides redundant arming engine-on signals.
		CAUTION If P71 initiated by step 1.c, automatic shutoff will not occur, but will have to be terminated manually (step 12).		ABORT STAGE pb functions are inoperative. No redundant arming signal is available.
		5. Poss FL V50 N25 R1 00203 - Switch guidance control to PGNS Automatic mode R2 ----- R3 -----		
		a. GUID CONT sw - PGNS S/C: PGNS sw - AUTO Key PRO b. If mode already selected: Key ENTR		
		6. V06 N94 R1 VGX(LM) XXXX.X fps R2 H rate XXXX.X fps R3 H XXXXX ft		VGX(LM) - Velocity to be gained in X-body coordinate. H rate - Altitude rate; - indicates descent and + indicates ascent

CREW-MAN	PNL	PROCEDURES		REMARKS
		4.10.3.3 APS Abort (LGC P71, AEA 410+00000) (cont)		
		6. Monitor thrusting: VI should be increasing H rate should remain positive and increase to approximately 200 fps & then decrease to 19.5 fps. H should be increasing. FDAI - Attitude errors should be ≤XX° - Attitude rates should be ≤XX°/sec		H - Altitude with respect to landing site radius; + indicates altitude greater than radius If H >25,000 feet, LGC will maneuver LM to orbit insertion attitude. If H <25,000 feet, LGC will inhibit X-axis override and maneuver LM to local vertical with +Z-axis downrange until H >25,000 feet or until H rate >40 fps, then pitch to orbit insertion attitude and restore X-axis override.
		8. Perform APS/RCS Propellant Interconnect, steps 1 through 3.		Ref para 4.13.3.3.
			3. Key DEDA C 500R (0.1) fps) & continue monitoring ΔVgx, ALT & ALT RATE ind, & FDAI: ΔVgx should be decreasing. ALT RATE ind should increase to approx 200 fps and then decrease to 19.5 fps. ALT ind should be increasing. Attitude errors should be <XX° Attitude rates should be <XX°/sec.	
			4. Perform APS/RCS Propellant Interconnect, steps 1 through 3.	Ref para 4.13.3.3.
		9. If desired: Key V16 N77E R1 TG XXBXX min-sec R2 VGY(LM) XXXX.X fps R3 VI +XXXX.X fps To terminate display: Key KEY REL		TG - Estimated time of flight from present time to accomplishment of ascent injection conditions; polarity is minus (-). VGY(LM) - Velocity to be gained in Y-body coordinate. VI - Inertial velocity.

THRUS

CREW-MAN	PNL	PROCEDURES		REMARKS
		4.10.3.3 APS Abort (LGC P71, AEA 410+00000) (cont)		
		V06 N94 R1 VGX(LM) XXXX.X fps R2 H rate XXXX.X fps R3 H XXXXX ft Key V16 N85E - VG (LM) R1 X XXXX.X fps R2 Y XXXX.X fps R3 Z XXXX.X fps To terminate display: Key KEY REL		VGX(LM) - Velocity to be gained in X-body coordinate.
		10. When TG is approx 10 sec: Perform APS/RCS Propellant Interconnect steps 4 & 5 CAUTION Do not perform step 11 if program not initiated by ABORT STAGE pb - push	5. When ΔVgx is approx 200 fps Perform APS/RCS Propellant Interconnect, steps 4 & 5.	Ref para 4.13.3.3.
			6. Readout parameters as desired: Horizontal velocity- Key DEDA C 427R (0.1 fps) Altitude rate- Key DEDA C 367R (0.1 fps) Altitude- Key DEDA C 337R (0.1 nm) Monitor ΔVgx- Key DEDA C 500R (0.1 fps)	At automatic shutdown: Horizontal velocity is variable. Altitude rate is 19.5 fps. ΔVgx (500) = 0 fps.
		11. Before TG ≤1 Sec: ENG THR CONT: ENG ARM sw - OFF	7. When horizontal velocity approaches shutoff criterion: ENG THR CONT: ENG ARM sw - OFF	Removes normal engine-on signal and thus enables automatic shut down.

RC 16

CREW-MAN	PNL	PROCEDURES		REMARKS
		4.10.3.3 APS Abort (LGC P71, AEA 410+0000P) (cont)		
		12. If automatic engine shutdown does not occur when TG <1 sec; ABORT STAGE pb - reset Poss MASTER ALARM - on MASTER ALARM pb/lt - reset Eng STOP pb/lt - push If program initiated by alternative method (step 1.c) ENG THR CONT: ENG ARM sw - OFF		Reset shuts engine off. MASTER ALARM - on when ABORT STAGE pb - reset, due to relay race removing CWEA inhibit. Required to reset manual start relays.
		13. ED: MASTER ARM sw - ON CB ED: LOGIC PWR A - open CB ED: LOGIC PWR B - open		Leaving ED: MASTER ARM sw - ON places inhibit on ED CWEA preventing spurious master alarm indications (all pyros have been fired at this time). Opening cb's conserves power.
		14. After automatic shut down, disarm APS and reset manual start relays: ABORT STAGE pb - reset Poss MASTER ALARM - on MASTER ALARM pb/lt - reset Eng STOP pb/lt - push Reset eng STOP pb/lt: a. Release tab - push b. Eng STOP pb/lt - on c. If eng STOP pb/lt - off, verify light is functioning by performing Caution & Warning Array Checkout, steps 3 & 4. If light is functioning, an inadvertent reset has taken place, eng is enabled, & steps d, e, & f should not be performed d. Eng STOP pb/lt - push e. Release tab - push f. Eng STOP pb/lt - off		Ref para 4.2.10.

THRUS

CREW-MAN	PNL	PROCEDURES	REMARKS
		4.10.3.3 APS Abort (LGC P71, AEA 410+00000) (cont)	
		15. FL V16 N94 R1 - VGX(LM) XXXX.X fps R2 - H rate XXXX.X fps R3 - H XXXXX ft Key PRO	VGX(LM) - Velocity to be gained in X-body coordinate. LGC zeroes attitude errors and sets 0.3° deadband in DAP at this time.
		16. FL V16 N85 - VG (LM) R1 X XXXX.X fps R2 Y XXXX.X fps R3 Z XXXX.X fps If nulling of VG is desired: S/C: PGNS sw - ATT HOLD THROTTLE/JETS cont (CDR & LMP) - JETS ACA/TTCA - null VGX, VGY, VGZ	Two-jet translation is recommended to be selected through R03. If not selected via R03, translation will be four-jet.
		8. Cutoff possibilities: a. If cutoff does not occur at appropriate point (late cutoff): ABORT STAGE pb - reset MASTER ALARM - on MASTER ALARM pb - reset go to 8c.2.	
		b. If cutoff is before appropriate point: 1) To perform APS burn: Reestablish ullage counter threshold: Key DEDA C 616+0000YE To perform ullage & manual start: TTCA (CDR) - move up for 2Y + 1 seconds Eng START pb/lt - push. If APS start does not occur, go to step 9. 2) To perform RCS burn, go to step 9	Ullage time is 2Y seconds depending on ullage volume. Y is determined from the following chart: Remaining Fuel / Total Burn Time in Sec / 2 Jets (B) / 4 Jets 100% to 50% / 0 to 228 / 2 / 2 40% / 274 / 4 / 3 30% / 319 / 5 / 4 20% / 365 / 6 / 4 10% / 410 / 7 / 5

LM 3209

CREW-MAN	PNL	PROCEDURES		REMARKS
		4.10.3.3 APS Abort (LGC P71, AEA 410+00000) (cont)		
			c. If cutoff occurs at normal point: 1) ABORT STAGE pb - reset MASTER ALARM - on MASTER ALARM pb - reset 2) Reset manual start relays: Eng STOP pb/lt - push 3) Reset Eng STOP pb/lt: a) Release tab - push b) Eng STOP pb/lt - on c) If eng STOP pb/lt - off, verify that lights are functioning by performing Caution and Warning Array Checkout steps 3 & 4. If lights are functioning, an inadvertent reset has taken place, engine is enabled, and steps d, e, & f should not be performed d) Eng STOP pb/lt - push e) Release tab - push f) Eng STOP pb/lt - off	Do not restart MPS if ΔVg is <30 fps. Ref para 4.2.10.
			9. Trim ΔV residual. Verify AEA attitude hold submode. Key DEDA C 400R If +00000 not displayed: Key DEDA C 400+00000E S/C: DEAD BAND sw - MIN Read and record: ΔVgx Key DEDA C 500R (0.1/1 fps) ΔVgy Key DEDA C 501R (0.1/1 fps) ΔVgz Key DEDA C 502R (0.1/1 fps)	If this trim maneuver is performed after use of orbit insertion routine, it should be performed immediately after engine shutdown. Orbit insertion routine drives LM to specific point on desired orbit and residual ΔVgx will increase nautrally after engine shutdown.

THRUS

CREW-MAN	PNL	PROCEDURES		REMARKS
		4.10.3.3 APS Abort (LGC P71, AGS 410+00000) (cont)		
			Read out and null ΔVg residuals in order of magnitude, largest first.	Null ΔVgx by moving TTCA up or down. Up TTCA nulls positive ΔVgx. Null ΔVgy by moving TTCA right or left. Right TTCA nulls positive ΔVgy. Null ΔVgz by moving TTCA in or out. In TTCA nulls positive ΔVgz.
			S/C: DEAD BAND sw - MAX	
		17. Terminate P71 or select Orbit Parameter Display Routine (R30): a. Terminate: Key PRO FL V37 N-- Key XXE, exit P71 or b. Select R30: To minimize RCS propellant usage in LGC selected narrow deadband, select minimum impulse. verify/set: S/C: PGNS sw - ATT HOLD Key V76E NO DAP lt - on Key V82E FL V16 N44 R1 Ha XXXX.X nm R2 Hp XXXX.X nm R3 TFF XXBXX min-sec If display of time to Hp is desired: Key N32E R1 00XXX hr R2 000XX min R3 0XX.XX sec When finished with display: Key KEY REL Key PRO to reestablish N85 display, exit R30 Key PRO FL V37 N-- Key XXE, exit P71		If Hp >35,000 ft, TFF = -59B59 Orbit parameters are automatically recomputed every 2 seconds while average g is in process. Ha = apolune altitude Hp = perilune altitude TFF = Time of free fall to 35,000 feet. If Hp>35,000 ft, TFF = -59B59.

CREW-MAN	PNL	PROCEDURES	REMARKS
		4.10.3.3 APS Abort (LGC P71, AGS 410+00000) (cont) 10. Read out perilune altitude: Key DEDA C 403R (0.1 nm) Compare with PGNCS Hp value. 11. Read out apolune altitude: Key DEDA C 315R (0.1 nm) Compare with PGNCS Ha value.	

THRUST

PARA	TITLE	PAGE
4.11	Undocking & Docking	4.11-2
4.11.1	LM Undocking From CSM	4.11-2
4.11.2	LM Docking	4.11-6

SEP & DOCK

CREW-MAN	PNL	PROCEDURES		REMARKS
		4.11 UNDOCKING & DOCKING		
		Undocking and docking procedures are arranged in a two-column format as separate PGNCS or AGS procedures, one guidance computer in control and the other in a followup condition ready to assume control; together, PGNCS in the left column and AGS in the right, they provide an integrated procedure.		
		4.11.1 LM UNDOCKING FROM CSM		This procedure describes LM active undocking. It should not be confused with maneuver commonly called separation, which is preceded by period of station-keeping following undocking. This procedure is incomplete until properly integrated with corresponding CSM procedure.
		LGC Power-Up (required)		Ref para 4.6.1.1.
		LGC Self-Test (desired)		Ref para 4.6.1.13.
		LGC time valid (required)		LGC/CMC Clock Synchronization Routine (R33) (para 4.6.1.15)
		LGC state vector valid (required)		LGC Update Program (para 4.6.1.7) and, when appropriate, Rendezvous Navigation Program (P20) (para 4.8.2.1)
		IMU Power-Up (LGC Operating) (required)		Ref para 4.6.1.3. ISS should be on 15 minutes before thrusting maneuver.
		IMU Orientation Determination Program (P51) (required)		Ref para 4.9.1.1.
		DAP Data Load Routine (R03) (required)		Ref para 4.6.1.8. (R1) N46 = 21002
			AGS Power-Up (required)	Ref para 4.6.2.1.
			AEA Self-Test (desired)	Ref para 4.6.2.3.
			AGS time valid (required)	AGS Manual Absolute Time Initialization procedure (para 4.6.2.6) or AGS Initialization Routine (R47) (para 4.6.1.18)

CREW-MAN	PNL	PROCEDURES		REMARKS
		4.11.1 LM UNDOCKING FROM CSM (cont)		
			AGS LM/CSM state vector valid (required)	AGS Initialization Routine (R47) (para 4.6.1.18) or AGS Manual LM State Vector Update/Initialization procedure (para 4.6.2.7) and AGS Manual CSM State Vector Update/ Initialization procedure (para 4.6.2.9)
			AGS attitude data valid (required)	AGS Alignment to PGNCS IMU (para 4.9.2.1) or Backup AGS Alignment procedures (para 4.9.2.2 and 4.9.2.3). Valid attitude data are required when guidance steering is desired; e.g., for thrusting maneuvers.
		EPS Basic (Unstaged) (required)	EPS Basic (Unstaged) (required)	Ref para 4.13.4.1.
		1. Select attitude control: GUID CONT sw - PGNS S/C: ROLL, PITCH, YAW sw - MODE CONT PGNS sw - OFF AGS sw - OFF DEAD BAND sw - MIN	1. Select attitude control: S/C: AGS sw - OFF PGNS sw - OFF ROLL, PITCH, YAW sw - MODE CONT DEAD BAND sw - MIN GUID CONT sw - AGS	Ref para 4.5.1.3. Switch guard may be moved to side position for duration of time S/C: PGNS sw - OFF.
		2. Enable ACA/TTCA: TTCA/TRANSL sw (2) - ENABLE ACA/4 JET sw (2) - ENABLE THROTTLE/JETS cont - JETS ENG THR CONT: BAL CPL sw - ON ATT/TRANSL sw - 2 JETS ACA PROP sw (2) - ENABLE	2. Enable ACA/TTCA: TTCA/TRANSL sw (2) - ENABLE ACA/4 JETS sw - ENABLE THROTTLE/JETS cont (2) - JETS ENG THR CONT: BAL CPL sw - ON ATT/TRANSL sw - 2 JETS ACA PROP sw (2) - ENABLE	Ref para 4.5.1.6 and 4.5.2.5.
		3. Select total attitude & attitude rate/error displays: FDAI 1 sw - as desired FDAI 2 sw - as desired ATTITUDE MON sw (1) - PGNS ATTITUDE MON sw (1) - AGS RATE/ERR MON sw (2) - LDG RDR/CMPTR Key V60E for attitude rate display or	3. Select total attitude & attitude rate/error displays: FDAI 1 sw - as desired FDAI 2 sw - as desired ATTITUDE MON sw (1) - AGS ATTITUDE MON sw (1) - PGNS RATE/ERR MON sw - LDG RDR/CMPTR	Ref para 4.5.3.1 and 4.5.3.2. Ref para 4.5.3.4.

CREW-MAN	PNL	PROCEDURES		REMARKS
		4.11.1 LM UNDOCKING FROM CSM (cont)		
		Key V61E for mode I attitude error display or Key V62E for mode II attitude error display		Mode I - DAP following errors. Mode II - total attitude errors with respect to N22 angles (gimbal angles; display is scale limited)(preferred).
		4. Select attitude rate displays: RATE SCALE sw - as desired	4. Select attitude rate displays: RATE SCALE sw - as desired	
		5. Request CSM verify CSM/LM electrical umbilical power sw set to off.	5. Request CSM verify CSM/LM electrical umbilical power sw set to off.	
		6. Disconnect & stow CSM/LM electrical umbilical.	6. Disconnect & stow CSM/LM electrical umbilical.	
		7. Install drogue (LM side).	7. Install drogue (LM side).	Ref para 4.14.13.
		8. Close overhead hatch (LM side).	8. Close overhead hatch (LM side).	Ref para 4.14.11.
		9. Perform ECS Basic.	9. Perform ECS Basic.	Ref para 4.13.1.1. SUIT GAS DIVERTER vlv is set to PULL EGRESS during MPS burns.
		10. Perform Heaters Status Check.	10. Perform Heaters Status Check.	Ref para 4.13.5.
		CAUTION RCS quad temperature must be ≥120°F for 25 minutes before firing RCS thrusters.		
		11. Perform Cabin Leak Check.	11. Perform Cabin Leak Check.	Ref para 4.13.1.9.
		12. Set EVNT TMR ind to count down to separation time.	12. Set EVNT TMR ind to count down to separation time.	Ref para 4.13.6.
		13. Verify CMP installed preloaded docking probe.	13. Verify CMP installed preloaded docking probe.	Assumption: Spring force of preloaded docking probe is sufficient to undock LM from CSM if desired.
		14. Verify CMP released docking latches.	14. Verify CMP released docking latches.	

LM 3207

CREW-MAN	PNL	PROCEDURES		REMARKS
		4.11.1 LM UNDOCKING FROM CSM (cont)		
		15. LTG: EXTERIOR LTG sw - DOCK	15. LTG: EXTERIOR LTG sw - DOCK	
		16. Verify COAS installed in overhead window.	16. Verify COAS installed in overhead window.	
		17. Select Thrust Monitor Program (P47): Key V37E 47E Poss PROG lt - on Key V05 N09E - Call alarm 00210 - IMU not on 00220 - IMU orientation not known Key KEY REL & RSET FL V37 N-- Key XXE, exit P47	17. Prepare AGS to display thrust: Key DEDA C 404 + 00000E C 405 + 00000E C 406 + 00000E C 470R	P47 should be selected immediately before planned thrusting maneuver and terminated as soon as possible after maneuver, to keep errors associated with average g integration at a minimum.
		18. FL V16 N83 - ΔV (LM) R1 X XXXX.X fps R2 Y XXXX.X fps R3 Z XXXX.X fps		Registers display all zeros, except for PIPA bias accumulation, until thrust maneuver is started.
		19. Secure self & cabin. Key V76E (min impulse) NO DAP lt - on S/C: PGNS sw - ATT HOLD Key V77 (do not key enter)	18. Secure self & cabin.	
		20. Coordinate undocking countdown with CMP.	19. Coordinate undocking countdown with CMP.	Probe extension occurs at this time.
		21. Monitor undocking when EVNT TMR ind - 00:00. RCS: TEMP/PRESS MON sel - FUEL MANF A & B PRESS ind - 178 to 188 psia TEMP/PRESS MON sel - OXID MANF A & B PRESS ind - 175 to 188 psia TEMP/PRESS MON sel - He	20. Monitor undocking when EVNT TMR ind - 00:00. RCS: TEMP/PRESS MON sel - FUEL MANF A & B PRESS ind - 178 to 188 psia TEMP/PRESS MON sel - OXID MANF A & B PRESS ind - 175 to 188 psia TEMP/PRESS MON sel - He	Verification of normal RCS propellant manifold pressures after undocking insures that RCS: SYS A & B SOV's are open.

CREW-MAN	PNL	PROCEDURES		REMARKS
		4.11.1 LM UNDOCKING FROM CSM (cont)		
		22. When separated desired number of feet: Key ENTR	21. When separated desired number of feet: S/C: AGS sw - ATT HOLD	Undocking station-keeping distance is mission-dependent. (NO DAP lt - off)
		23. Terminate P47: Key PRO FL V37 N-- Key XXE, exit P47		
		4.11.2 LM DOCKING		This is a mutually cooperative LM/CSM docking procedure, which is incomplete until properly integrated with corresponding CSM procedure.
		LGC Power-Up (required)		Ref para 4.6.1.1.
		LGC Self-Test (desired)		Ref para 4.6.1.13.
		LGC time valid (required)		LGC/CMC Clock Synchronization Routine (R33) (para 4.6.1.15)
		LGC state vector valid (required)		LGC Update Program (P27) (para 4.6.1.7) and, when appropriate, Rendezvous Navigation Program (P20) (para 4.8.2.1)
		IMU Power-Up (LGC Operating) (required)		Ref para 4.6.1.3. ISS should be on 15 minutes before thrusting maneuver.
		IMU Orientation Determination (P51) (required)		Ref para 4.9.1.1.
		DAP Data Load Routine (R03) (required)		Ref para 4.6.1.8.
		LGC monitoring thrust (required)		Thrust Monitor Program (P47) (para 4.10.1.4)
		COAS prepared for docking (required)		COAS lighting check (para 4.2.9), steps 1 through 9.
			AGS Power-Up (required)	Ref para 4.6.2.1.

LM 3207, LM 3231

CREW-MAN	PNL	PROCEDURES		REMARKS
		4.11.2 LM DOCKING (cont)		
			AEA Self-Test (desired)	Ref para 4.6.2.3.
			AGS time valid (required)	AGS Manual Absolute Time Initialization procedure (para 4.6.2.6) or AGS Initialization Routine (R47) (para 4.6.1.18)
			AGS LM/CSM state vector valid (required)	AGS Initialization Routine (R47) (para 4.6.1.18) or AGS Manual LM State Vector Update/Initialization procedure (para 4.8.2.7) and AGS Manual CSM State Vector Update/Initialization procedure (para 4.6.2.9)
			AGS attitude data valid (required)	AGS Alignment to PGNCS IMU (para 4.9.2.1) or Backup AGS Alignment procedures (para 4.9.2.2/4.9.2.3), or AGS Lunar align (400 + 40000) (para 4.9.3.2). Valid attitude data are required when guidance steering is desired; e.g., for thrusting maneuvers.
			COAS prepared for docking (required)	COAS lighting check (para 4.2.9, steps 1 through 9).
		1. Select RR displays: SHFT/TRUN ⅟ sw - as desired RATE/ERR MON sw (1) - RNDZ RADAR X POINTER SCALE sw - HI MULT RNG/ALT MON sw - RNG/RNG RT	1. Select RR displays: SHFT/TRUN ⅟ sw - as desired RATE/ERR MON sw (1) - RNDZ RADAR X POINTER SCALE sw - HI MULT RNG/ALT MON sw - RNG/RNG RT	Ref para 4.5.3.6. Ref para 4.5.3.7. Ref para 4.5.3.10.
		2. Select attitude control: Key V77E NO DAP lt - off GUID CONT sw - PGNS S/C: ROLL, PITCH, YAW sw - MODE CONT PGNS sw - ATT HOLD AGS sw - ATT HOLD		Ref para 4.5.1.3.
		or Same switch settings, except: Key V76E NO DAP lt - on		Ref para 4.5.1.4.

CREW-MAN	PNL	PROCEDURES		REMARKS
		4.11.2 LM DOCKING (cont)		
		3. Enable ACA & TTCA: TTCA/TRANSL sw (2) - ENABLE ACA/4 JET sw (2) - ENABLE THROTTLE/JETS cont (2) - JETS ENG THR CONT: BAL CPL sw - ON ATT/TRANSL sw - 2 JETS ACA PROP sw (2) - ENABLE	2. Enable ACA & TTCA: TTCA/TRANSL sw (2) - ENABLE ACA/4 JET sw (2) - ENABLE THROTTLE/JETS cont (2) - JETS ENG THR CONT: BAL CPL sw - ON ATT/TRANSL sw - 2 JETS ACA PROP sw (2) - ENABLE	Ref para 4.5.2.5.
		4. Select total attitude display: ORDEAL: FDAI 1 sw - as desired FDAI 2 sw - as desired ATTITUDE MON sw (1) - PGNS ATTITUDE MON sw (1) - AGS		Ref para 4.5.3.1.
			3. Select attitude control: S/C: AGS sw - ATT HOLD PGNS sw - ATT HOLD ROLL, PITCH, YAW sw - MODE CONT DEAD BAND sw - MIN	Ref para 4.5.1.6. AGS pulse and direct modes of attitude control are not recommended for docking.
			4. Select total attitude display: ORDEAL: FDAI 1 sw - as desired FDAI 2 sw - as desired ATTITUDE MON sw (1) - AGS ATTITUDE MON sw (1) - PGNS	Ref para 4.5.3.3.
		5. Select attitude rate displays: RATE SCALE sw - as desired	5. Select attitude rate displays: RATE SCALE sw - as desired	Ref para 4.5.3.5.
		6. COAS sw - FWD LTG: EXTERIOR LTG sw - DOCK Verify CMP has installed docking target.	6. COAS sw - FWD LTG: EXTERIOR LTG sw - DOCK Verify CMP has installed docking target.	
		7. Radar technique: ACA - yaw & pitch, as required, to null shaft & trunnion angles on FDAI. TTCA - translate along X & Y body-axes to null LOS rates on X pointer ind (X pointer ind is	7. Radar technique: ACA - yaw & pitch, as required, to null shaft & trunnion angles on FDAI. TTCA - translate along X & Y body-axes to null LOS rates on X pointer (X pointer ind	Select display scaling ranges as desired for coarse and fine nulling. RNG/ALT ind pwr/sig fail lt may flash randomly for range rates below 10 fps when displaying RR data. This is inherent in detection logic of

CREW-MAN	PNL	PROCEDURES		REMARKS
		4.11.2 LM DOCKING (cont)		
		fly-to display.)	is fly-to display.)	indicator and does not indicate system malfunction. Data are good and randomly flashing light should be disregarded.
		Translate along Z-body-axis to bring range rate to -5 fps.	Translate along Z-body-axis to bring range rate to -5 fps.	Steps 7 and 8 outline approach from 500 to 110 feet using radar or visual (out-of-window) displays, respectively.
		8. Monitor: Between range of 500 & 110 ft, maintain null of shaft & trunnion angles & LOS rates. Maintain range rate at -5 fps.	8. Monitor: Between range of 500 & 110 ft, maintain null of shaft & trunnion angles & LOS rates. Maintain range rate at -5 fps.	If range track is broken and reacquisition occurs at true range of less than 500 feet, readout of approximately 405 nm can occur. This anomaly does not affect accuracy of range rate or angle data.
		9. TTCA - at 110 ft, translate to null range rate so that, at range of 80 ft, range rate is zero	9. TTCA - at 110 ft, translate to null range rate so that, at range of 80 ft, range rate is zero	When range and altitude input is equal to zero feet or range and attitude rate is equal to zero fps. RNG/ALT ind pwr/sig fail lt goes on. This does not represent malfunction; condition is inherent in detection circuitry.
		10. Select PGNCS attitude rate display: RATE/ERR MON sw - LDG RDR/CMPTR Key V60E		Establish PGNCS attitude rate/error display, ref para 4.5.3.2.
		11. ACA & TTCA - rotate & translate to acquire face-to-face orientation (LM Z-axis aligned with CSM X-axis and COAS aligned with docking target) & null LOS & range rates	10. ACA & TTCA - rotate & translate to acquire face-to-face orientation (LM Z-axis aligned with CSM X-axis and COAS aligned with docking target) & null LOS & range rates	
		12. Prepare for docking: RNDZ RADAR sel - SLEW SHFT/TRUN ⅊ sw - ±50° RNDZ RADAR: SLEW sw - LEFT or RIGHT to null trunnion	11. Prepare for docking: RNDZ RADAR sel - SLEW SHFT/TRUN ⅊ sw - ±50° RNDZ RADAR: SLEW sw - LEFT or RIGHT to null trunnion	Ref para 4.6.3.6 for alternate procedure for stowing RR antenna.

CREW-MAN	PNL	PROCEDURES		REMARKS
		4.11.2 LM DOCKING (cont)		
		RNDZ RADAR: SLEW sw - DOWN until shaft angle = 50° CB/AC BUS A: RNDZ RDR - open Install COAS in overhead window. COAS sw - OVHD	RNDZ RADAR: SLEW sw - DOWN until shaft angle = 50° CB/AC BUS A: RNDZ RDR - open Install COAS in overhead window. COAS sw - OVHD	
		13. ACA - pitch down 90° & view CSM through overhead window	12. ACA - pitch down 90° & view CSM through overhead window	
		14. ACA - yaw left 120° until COAS reticle is aligned with CSM stand-off target.	13. ACA - yaw left 120° until COAS reticle is aligned with CSM stand-off target.	Yaw instructions are for head-to-head initial conditions (such as both vehicles heads down or heads up) before 90° pitch, after CSM roll (if any). For one vehicle heads up and other heads down, yaw right 60°.
		15. For CSM active docking, go to step 16.	14. For CSM active docking, go to step 15.	
		16. TTCA - make final approach along +X-axis at closing rate of 0.25 to 0.5 fps	15. TTCA - make final approach along +X-axis at closing rate to 0.25 to 0.5 fps	Actual LOS to CSM will be approximately 3° below +X-axis.
		17. At contact, apply +X-thrust.	16. At contact, apply +X-thrust.	Contact is indicated by audible or tactile cues, voice link from CMP, and/or COAS observation.
		18. Terminate +X-thrust on receipt of capture verification.	17. Terminate +X-thrust on receipt of capture verification.	CMP provides voice verification.
		19. If in minimum impulse: Key V77E NO DAP lt - off		LM must be in attitude hold after capture to permit CSM realignment and retraction.
		20. Receive indication of docking-latch operation from CSM and/or by audible & tactile cues.	18. Receive indication of docking-latch operation from CSM and/or by audible & tactile cues.	Retraction is automatically initiated when capture latches engage drogue. Ten-inch retraction stroke should take approximately 5 seconds.
		21. Maintain attitude control during retraction.	19. Maintain attitude control during retraction.	

LM 3235

CREW-MAN	PNL	PROCEDURES		REMARKS
		4.11.2 LM DOCKING (cont)		
		22. S/C: PGNS sw - OFF	20. S/C: AGS sw - OFF	Switch guard may be moved to side position for duration of time S/C: PGNS sw - OFF.
		23. LTG: FLOOD sw - OVHD/FWD	21. LTG: FLOOD sw - OVHD/F	
		24. Pressurize LM/CSM interlock	22. Pressurize LM/CSM interlock	
		25. LTG: EXTERIOR LTG sw - OFF	23. LTG: EXTERIOR LTG sw - OFF	

SEP & DOCK

PARA	TITLE	PAGE
4.12	Staging	4.12-2
4.12.1	DPS Propellant Tank Venting	4.12-2
4.12.2	DPS Supercritical He Venting (Lunar Surface Only)	4.12-2A
4.12.3	APS Pressurization & Checkout	4.12-3
4.12.4	APS Pressurization & Checkout (Alternate)	4.12-4
4.12.5	EPS Prestaging Check	4.12-6
4.12.6	ED Prestaging Check	4.12-8
4.12.7	ECS Prestaging Check	4.12-8
4.12.8	EPS Postaging Check	4.12-8
4.12.9	RCS Staging	4.12-9
4.12.10	AGS FITH	4.12-14

CREW-MAN	PNL	PROCEDURES	REMARKS
		4.12 STAGING	
		4.12.1 DPS PROPELLANT TANK VENTING	This task will be performed prior to staging or after last DPS burn, depending on specific mission profile.
		1. Controls - MPS Basic (Unstaged)	Ref para 4.13.3.1
CDR	1	2. DES He REG 1 sw - CLOSE; tb - bp DES He REG 2 tb - bp	
	8	3. Vent propellant tanks. DES PROPUL:	
		OXID VENT - tb - gray	OXID VENT latching valve is open when tb - gray.
		FUEL VENT - tb - gray	FUEL VENT latching valve is open when tb - gray.
		ED:	
		MASTER ARM sw - ON	
		DES VENT sw - FIRE	
		MASTER ARM sw - OFF	Possible MASTER ALARM pb/lt - when ED: MASTER ARM sw - OFF due to relay race removing CWEA inhibit.
	1	MPS:	
		OXID & FUEL PRESS ind - verify fuel & oxidizer pressures decreasing	
	1	DES REG warn lt - on	MASTER ALARM lt and DES REG warn lt go on when pressure drops below 220 psia. DES REG warn lt remains on until staging or until CB INST: CWEA is cycled.
		MASTER ALARM lt - on	
		MASTER ALARM pb/lt - reset	
		4. For lunar-surface venting only -	
		When MPS: OXID PRESS ind - 20 to 40 psia:	
	8	DES PROPUL: OXID VENT sw - CLOSE; tb-bp	OXID VENT latching valve is closed when tb-bp.
		When MPS: FUEL PRESS ind - <8 psia:	
		DES PROPUL: FUEL VENT sw - CLOSE; tb-bp	FUEL VENT latching valve is closed when tb - bp.
		5. For zero-g venting only -	After long DPS abort or contingency burn, venting may be required if descent stage is to be retained, to avoid excessive pressure buildup in propellant tanks due to heat soakback. DPS relief valves cannot protect tanks from hot spots, which can exceed fracture-mechanics limits defined in SODB.
		If vent stops on its own or if pressure decrease <1 psia/10 sec:	
	11	CB S/C: ATT DIR CONT - close	Propellants reaching vent valves may close them or valves may vent propellants instead of helium. (Ref para 4.2.30.)
	5	+X TRANSL pb - push and hold Wait 2 sec, then:	

CREW-MAN	PNL	PROCEDURES	REMARKS
		4.12.1 DPS PROPELLANT TANK VENTING (cont)	
	8	DES PROPUL:	
		OXID VENT sw - OPEN; tb - gray	
		FUEL VENT sw - OPEN; tb - gray	
		Terminate translation after 10 sec:	
	5	+X TRANSL pb - release	
	1	When MPS: OXID PRESS ind - (TBD by MSFN):	Vent-termination pressure is a function of many variables; MSFN must provide this data to crew.
	8	DES PROPUL: OXID VENT sw - CLOSE; tb - bp	
	1	When MPS: FUEL PRESS ind - (TBD by MSFN):	
	8	DES PROPUL: FUEL VENT sw - CLOSE; tb - bp	
		4.12.2 DPS SUPERCRITICAL He VENTING (LUNAR SURFACE ONLY)	DPS Propellant Tank Venting (para 4.12.1) is prerequisite to this procedure.
		1. Vent supercritical helium:	
	1	HELIUM MON sel - SUPCRIT PRESS	
		PRPLNT TEMP/PRESS MON sw - DES 1	
	8	DES PROPUL:	
		FUEL VENT sw - OPEN: tb - gray	FUEL VENT latching valve is open when tb - gray
		OXID VENT sw - OPEN: tb - gray	OXID VENT latching valve is open when tb - gray.
	1	DES He REG 1 sw - OPEN; tb - gray	REG 1 & 2 SOV's and vent valves will be left open to insure that descent supercritical helium, fuel and oxidizer tanks will be at minimum pressure when ascent engine FITH occurs.
		DES He REG 2 sw - OPEN; tb - gray	
	11	CB PROPUL: DES He REG/VENT - open	
		2. Verify supercritical helium pressure decreasing.	

CREW-MAN	PNL	PROCEDURES	REMARKS
		4.12.3 APS PRESSURIZATION & CHECKOUT (cont)	
	1	5. PRPLNT TEMP/PRESS MON sw - ASC MPS: FUEL TEMP ind - 50° to 90° F OXID TEMP ind - 50° to 90°F FUEL PRESS ind - 172 to 203 psia OXID PRESS ind - 172 to 203 psia	Below 40°F, engine operation is rough. Above 100°F, oxidizer decomposes, driving oxidizer-fuel ratio out of tolerance. Engine will not operate with smooth and efficient combustion with ΔT F/O >10°F.
		6. HELIUM MON sel - PRESS 2 MPS: HELIUM ind - 2700 to 3450 psia HELIUM MON sel - PRESS 1 MPS: HELIUM ind - 2700 to 3450 psia	
		4.12.4 APS PRESSURIZATION & CHECKOUT (ALTERNATE)	This optional procedure provides checks for helium regulators independently, before pressurization. Ascent helium tank pressure values, as function of time will remain approximately the same as for initial tank loading conditions. See figure 4-8. Ascent Helium Loading, for expected tank pressure as function of tank temperature and initial loading conditions. ASC PRESS warn lt goes on when helium tank pressure decreases to 2773 psia. ASC He REG primary solenoid latching valve is closed when tb - bp.
		1. Controls - MPS Basic (Staged)	Ref para 4.13.3.2.
		2. HELIUM MON sel - PRESS 1 MPS: HELIUM ind - 2800 to 3500 psia	
		3. HELIUM MON sel - PRESS 2 MPS: HELIUM ind - 2800 to 3500 psia	
		4. PRPLNT TEMP/PRESS MON sw - ASC MPS: FUEL TEMP ind - 50° to 90° F OXID TEMP ind - 50° to 90° F FUEL PRESS ind - 108 to 172 psia OXID PRESS ind - 71 to 143 psia	
		5. ASC He REG 1 sw - CLOSE; tb - bp	ASC He REG primary latching valve is closed when tb - bp.

CREW-MAN	PNL	PROCEDURES	REMARKS
		4.12.3 APS PRESSURIZATION & CHECKOUT	Ascent helium tank pressure values, as function of time will remain approximately the same as for initial tank loading conditions. See figure 4-8. Ascent Helium Loading, for expected tank pressure as function of tank temperature and initial loading conditions. ASC PRESS warn lt goes on when helium tank pressure decreases to 2773 psia.
		1. Controls - MPS Basic (Staged)	Ref para 4.13.3.2.
		2. HELIUM MON sel - PRESS 1 MPS: HELIUM ind - 2800 to 3500 psia	
		3. HELIUM MON sel - PRESS 2 MPS: HELIUM ind - 2800 to 3500 psia	
	8	4. ED: ASC He SEL sw - BOTH MASTER ARM sw - ON	Select TANK 1 or TANK 2 if pressure readings in step 2 or 3 are below TBD, or a leak is suspected. APS helium tank design limit is 3500 psia, which corresponds to +160° F tank temperature. If this limit is approached, pressurize APS from affected tank(s).
		ASC He PRESS sw - FIRE	APS must not remain activated, i.e. compatibility squib valves fired, more than 24 hours before termination of use.
		MASTER ARM sw - OFF	Possible MASTER ALARM - on when ED: MASTER ARM sw - OFF due to relay race removing CWEA inhibit.
		ASC PRESS warn lt - on (if helium pressure <2773 psia after pressurization)	Light goes off when staging occurs
			Following values apply to pressure relief valve assembly: Burst-disk rupture pressure - 226 to 250 psia Reseat pressure - 225 psia Relief valve cracking pressure - 245 psia Pressure fluctuations must settle out before proceeding to step 5.

STAGING

CREW-MAN	PNL	PROCEDURES	REMARKS
		4.12.4 APS PRESSURIZATION & CHECKOUT (ALTERNATE) (cont)	
	8	6. ED:	
		ASC He SEL sw - BOTH	Select TANK 1 or TANK 2 if pressures indicated in step 2 or 3 are below TBD or if there is possibility of leak.
		MASTER ARM sw - ON	APS helium tank design limit is 3500 psia, which corresponds to +160°F tank temperature. If this limit is approached, pressurize APS from affected tank(s).
		ASC He PRESS sw - FIRE	APS must not remain activated, i.e. compatibility squib valves fired, more than 24 hours before termination of use.
		MASTER ARM sw - OFF	Possible MASTER ALARM - on when ED: MASTER ARM sw - OFF due to relay race removing CWEA inhibit.
			Following values apply to pressure relief valve assembly: Burst-disk rupture pressure - 226 to 250 psia Reseat pressure - 225 psia Relief valve cracking pressure - 245 psia Pressure fluctuations should settle out before proceeding to step 9.
	1	7. PRPLNT TEMP/PRESS MON sw - ASC MPS	
		FUEL TEMP ind - 50° to 90° F OXID TEMP ind - 50° to 90° F	Below 40°F, engine operation is rough. Above 100°F, oxidizer decomposes, driving oxidizer-fuel ratio out of tolerance. Engine will not operate with smooth and efficient combustion with ΔT F/O >10°F.
		FUEL PRESS ind - 172 to 203 psia OXID PRESS ind - 172 to 203 psia	Regulated pressure range in secondary leg is as follows: 172 to 180 psia (primary) and 178 to 186 psia (secondary). Maximum lockup pressure is 203 psia. Generally, lockup pressure is about 10 to 12 psia higher than nominal regulated pressure for each regulator.
CDR	1	8. ASC He REG 1 sw - OPEN; tb - gray	ASC He REG primary latching valve is open when tb - gray.
		9. PRPLNT TEMP/PRESS MON sw - ASC MPS:	
		FUEL TEMP ind - 50° to 90° F OXID TEMP ind - 50° to 90° F	
		FUEL PRESS ind - 180 to 203 psia OXID PRESS ind - 180 to 203 psia	Regulated pressure range in primary leg is as follows: 180 to 188 psia (primary) and 186 to 194 psia (secondary). Maximum lockup pressure is 203 psia. Generally, lockup pressure is about 10 to 12 psia higher than nominal regulated pressure for each regulator.

CREW-MAN	PNL	PROCEDURES	REMARKS
		4.12.4 APS PRESSURIZATION & CHECKOUT (ALTERNATE) (cont)	
		10. HELIUM MON sel - PRESS 2 MPS: HELIUM ind - 2700 to 3450 psia HELIUM MON sel - PRESS 1 MPS: HELIUM ind - 2700 to 3450 psia	
		4.12.5 EPS PRESTAGING CHECK	
		CAUTION Fifteen minutes before staging, ascent batteries must be placed on line in parallel with descent batteries. Descent batteries No. 1 & 3 must be removed from line at this time.	
		1. Deleted	
CDR LMP	14	2. EPS: POWER/TEMP MON sel - BAT 5 VOLTS ind - 31.5 to 37.2 vdc BAT 5 NORMAL LMP FEED sw - ON; tb - gray VOLTS ind - 28.0 to 32.5 vdc AMPS ind - TBD POWER/TEMP MON sel - BAT 6 VOLTS ind - 31.5 to 37.2 vdc BAT 6 NORMAL CDR FEED sw - ON; tb - gray VOLTS ind - 28.0 to 32.5 vdc AMPS ind - TBD LMP BAT 1 HI V sw - TBD; tb - TBD CDR BAT 3 sw - TBD; tb - TBD	
CDR	11	3. CB/AC BUS A: DECA GMBL - open CB PROPUL: DES He REG/VENT - open CB S/C: DECA PWR - open CB ED: LDG GEAR FLAG - open CB HTR: LDG RDR - open CB FLT DISP: THRUST - open CB PGNS: LDG RDR - open CB EPS: INV 1 - close	

CREW-MAN	PNL	PROCEDURES	REMARKS
		4.12.5 EPS PRESTAGING CHECK (cont)	
		CAUTION Five minutes before staging, descent batteries No. 2 & 4 must be removed from line & CB EPS: CROSS TIE BAL LOADS (2) must be opened.	
LMP	14	4. EPS: LMP BAT 2 sw - OFF/RESET; tb - bp CDR BAT 4 HI V sw - OFF/RESET; tb - bp	
CDR LMP	11 16	5. CB EPS: CROSS TIE BAL LOADS - close CB EPS: CROSS TIE BAL LOADS - open	
LMP	14	6. EPS: INVERTER sw - 1 POWER/TEMP MON sel - AC BUS VOLTS ind - green band INVERTER sw - 2 VOLTS ind - green band POWER/TEMP MON sel - LMP BUS VOLTS ind - 26.5 to 32.5 vdc POWER/TEMP MON sel - CDR BUS VOLTS ind - 26.5 to 32.5 vdc	Green band represents 112 to 118 vac.
		7. EPS: LMP BAT 1 HI V sw - ON; tb - gray CDR BAT 4 HI V sw - ON; tb - gray LMP BAT 2 sw - ON; tb - gray CDR BAT 3 sw - ON; tb - gray	If staging is to occur soon after this task, omit step 7; otherwise omit step 8.
		8. EPS: DES BATS sw - DEADFACE; tb - bp	

CREW-MAN	PNL	PROCEDURES	REMARKS
		4.12.6 ED PRESTAGING CHECK	Purpose of ED Prestaging Check procedure is to check open circuit voltage of ED batteries A and B before vehicle staging.
CDR	11	1. Verify CB ED: LOGIC PWR A - close	
LMP	16	2. Verify CB ED: LOGIC PWR B - close	
	14	3. EPS: POWER/TEMP MON sel - ED/OFF ED VOLTS sw - BAT A VOLTS ind - 35.0 to 37.8 vdc ED VOLTS sw - BAT B VOLTS ind - 35.0 to 37.8 vdc ED VOLTS sw - OFF POWER/TEMP MON sel - CDR BUS	Nominal open-circuit voltage for each ED battery is 37.1 vdc.
		4.12.7 ECS PRESTAGING CHECK	
		1. Perform ECS Basic (Staged).	Ref para 4.13.1.1.
		2. Perform ECS Periodic Monitoring (Staged).	Ref para 4.13.1.3.
		4.12.8 EPS POSTSTAGING CHECK	
CDR LMP	11 16	1. Perform EPS Basic (Staged), except: CB ED: LOGIC PWR A - open CB S/C: ABORT STAGE - open CB ED: LOGIC PWR B - open	Ref para 4.13.4.2.
	14	2. EPS: POWER/TEMP MON sel - BAT 5 VOLTS ind - 28.0 to 32.5 vdc AMPS ind - TBD	
		3. EPS: POWER/TEMP MON sel - BAT 6 VOLTS ind - 28.0 to 32.5 vdc AMPS ind - TBD	
		4. EPS: POWER/TEMP MON sel - AC BUS VOLTS ind - green band	

CREW-MAN	PNL	PROCEDURES		REMARKS
		4.12.9 RCS STAGING		Purpose of RCS Staging procedure is to perform manual staging of ascent and descent stages, using RCS translation maneuver.
		LGC Power-Up (required)		Ref para 4.6.1.1.
		LGC Self-Test (desired)		Ref para 4.6.1.13.
		LGC time valid (required)		LGC/CMC Clock Synchronization Routine (R33) (para 4.6.1.15)
		LGC state vector valid (required)		LGC Update Program (P27) (para 4.6.1.7) and, when appropriate, Rendezvous Navigation Program (P20) (para 4.8.2.1)
		IMU Power-Up (LGC Operating) (required)		Ref para 4.6.1.3. ISS should be on 15 minutes before thrusting maneuver.
		IMU Orientation Determination (P51) (required)		Ref para 4.9.1.1.
		DAP Data Load Routine (R03) (required)		Ref para 4.6.1.8.
		EPS Prestaging Check (required)		Ref para 4.12.5.
		ECS Prestaging Check (required)		Ref para 4.12.7.
		ED Prestaging Check (desired)		Ref para 4.12.6.
			AGS Power-Up (required)	Ref para 4.6.2.1.
			AEA Self-Test (desired)	Ref para 4.6.2.3.
			AGS time valid (required)	AGS Manual Absolute Time Initialization procedure (para 4.6.2.6) or AGS Initialization Routine (R47) (para 4.6.1.18)
			AGS LM/CSM state vector valid (required)	AGS Initialization Routine (R47) (para 4.6.1.18) or AGS Manual LM State Vector Update/Initialization procedure (para 4.6.2.7) and AGS

LM 3207, LM 3231

CREW-MAN	PNL	PROCEDURES		REMARKS
		4.12.9 RCS STAGING (cont)		
				Manual CSM State Vector Update/ Initialization procedure (para 4.6.2.9)
			PGNCS/AGS Align (required)	Ref para 4.9.2.1.
			EPS Prestaging Check (required)	Ref para 4.12.5.
			ECS Prestaging Check (required)	Ref para 4.12.7.
			ED Prestaging Check (required)	Ref para 4.12.6.
		1. Select attitude control: GUID CONT sw - PGNS S/C: ROLL, PITCH, YAW sw - MODE CONT PGNS sw - ATT HOLD AGS sw - ATT HOLD DEAD BAND sw - MIN Key V77E No DAP lt - off	1. Select attitude control: GUID CONT sw - AGS S/C: ROLL, PITCH, YAW sw - MODE CONT AGS sw - ATT HOLD PGNS sw - ATT HOLD DEAD BAND sw - MIN	
		2. Enable ACA/TTCA: TTCA/TRANSL sw (2) - ENABLE ACA/4 JET sw (2) - ENABLE THROTTLE/JETS cont (2) - JETS ENG THR CONT: BAL CPL sw - on ATT/TRANSL sw - 4 JETS ACA PROP sw (2) - ENABLE	2. Enable ACA/TTCA: TTCA/TRANSL sw (2) - ENABLE ACA/4 JET sw (2) - ENABLE THROTTLE/JETS cont (2) - JETS ENG THR CONT: BAL CPL sw - ON ATT/TRANSL sw - 4 JETS ACA PROP sw (2) - ENABLE	Ref para 4.5.1.6 and 4.5.2.5.
		3. Select total attitude & attitude rate/error displays: ORDEAL: FDAI 1 sw - as desired FDAI 2 sw - as desired		Ref para 4.5.3.1.
		ATTITUDE MON sw (1) - PGNS ATTITUDE MON sw (1) - AGS RATE/ERR MON sw (2) - LDG RDR/CMPTR Key V60E for LGC attitude rate display or		Ref para 4.5.3.2
		Key V61E for mode I attitude error display or		Mode I - DAP following errors

LM 3231

CREW-MAN	PNL	PROCEDURES		REMARKS
		4.12.9 RCS STAGING (cont)		
		Key V62E for mode II attitude error display		Mode II - total attitude errors with respect to N22 angles (gimbal angles; display is scale limited)
			3. Select total attitude & attitude error display: ORDEAL: FDAI 1 sw - as desired FDAI 2 sw - as desired ATTITUDE MON sw - AGS ATTITUDE MON sw - PGNS RATE/ERR MON sw (2) - LDG RDR/CMPTR	Ref para 4.5.3.3. Ref para 4.5.3.4.
		4. Select attitude rate display: RATE SCALE sw - as desired	4. Select attitude rate display: RATE SCALE sw - as desired	Ref para 4.5.3.5.
		5. Secure self & cabin.	5. Secure self & cabin.	
		6. Set EVNT TMR ind to stage time.	6. Set EVNT TMR ind to stage time.	
		7. When EVNT TMR ind - 02:00 min: Key V48E		Purpose of Digital Autopilot Data Load Routine (R03) at this time is to preload DAP with ascent configuration information before staging, to assure stable-vehicle condition immediately following staging. R03 should not be entered while average g integration process is on.
		8. FL V01 N46 - DAP configuration/ response data code R1 ABCDE R2 000XX R3 ----- A = 1 - Ascent stage only A = 2 - Ascent and descent stages A = 3 - Ascent and descent stages docked with CSM B = 0 - Two-jet translation (RCS system A alone)		1BCOE is recommended.

CREW-MAN	PNL	PROCEDURES		REMARKS
		4.12.9 RCS STAGING (cont) B = 1 - Two-jet translation (RCS system B alone) B = 2 - Four-jet translation (RCS systems A & B) C = 0 - Fine scaling ACA - 4°/sec max C = 1 - Normal scaling ACA - 20°/sec max D = 0 - Attitude deadband 0.3° D = 1 - Attitude deadband 1.0° D = 2 - Attitude deadband 5.0° E = KALCMANU rate 0 = 0.2°/sec 1 = 0.5°/sec 2 = 2.0°/sec 3 = 10.0°/sec Accept: Key PRO Reject: Key V21E - Load desired DAP data code		
		9. FL V06 N47 R1 LM weight XXXXX lb R2 CSM weight XXXXX lb R3 ----- Accept: Key V34E - Exit R03 Reject: -Key V21E - Load desired parameter		Load ascent weight is supplied by MSFN.
		10. Select thrust: Monitor P47: Key V37E 47E Poss PROG lt - on Key V05 N09E - Call alarm 00210 - IMU not on 00220 - Bad REFSMMAT (orientation not known) Key KEY REL & RSET FL V37 N-- Key XXE, exit P47	7. Zero & readout VDX: Key DEDA C 404 + 00000E C 405 + 00000E C 406 + 00000E C 470R (0.1/1 fps)	P47 should be selected immediately before planned thrusting maneuver, to keep errors associated with average-g integration at a minimum.

CREW-MAN	PNL	PROCEDURES		REMARKS
		4.12.9 RCS STAGING (cont)		
		11. FL V16 N83 - ΔV (LM) R1 X XXXX.X fps R2 Y XXXX.X fps R3 Z XXXX.X fps		Registers display all zeros, except for PIPA bias accumulation, until thrust maneuver is started. N83 is updated every 2 seconds.
		To switch to AGS control: GUID CONT sw - AGS	To switch to PGNCS control: GUID CONT sw - PGNS	
		12. ACA - maneuver to desired thrusting attitude Monitor FDAI to avoid gimbal lock.	8. ACA - maneuver to desired thrusting attitude Monitor FDAI to avoid gimbal lock.	
		13. EPS: LMP BAT 1 HI V sw - OFF/RESET; tb - bp LMP BAT 2 sw - OFF/RESET; tb - bp CDR BAT 3 sw - OFF/RESET; tb - bp CDR BAT 4 HI V sw - OFF/RESET; tb - bp DES BATS sw - DEADFACE; tb - bp ED: MASTER ARM sw - ON	9. EPS: LMP BAT 1 HI V sw - OFF/RESET; tb - bp LMP BAT 2 sw - OFF/RESET; tb - bp CDR BAT 3 sw - OFF/RESET; tb - bp CDR BAT 4 HI V sw - OFF/RESET; tb - bp DES BATS sw - DEADFACE; tb - bp ED: MASTER ARM sw - ON	
		14. When EVNT TMR ind - 00:00: TTCA - move down & hold When ΔVX = -2 fps: TTCA - center ED: STAGE sw - FIRE TTCA - move up & hold When ΔVX = 0: TTCA - center	10. When EVNT TMR ind - 00:00: TTCA - move down & hold When ΔVX = -2 fps: TTCA - center ED: STAGE sw - FIRE TTCA - move up & hold When ΔVX = 0: TTCA - center	
		15. CB ED: LOGIC PWR A - open CB ED: LOGIC PWR B - open	11. CB ED: LOGIC PWR A - open CB ED: LOGIC PWR B - open	Leaving ED: MASTER ARM sw - ON places inhibit on ED CWEA preventing spurious master alarm indications (all pyros have been fired at this point). Opening CB's conserves electrical power.
		16. Key PRO or V34E to terminate ΔV monitoring.		Orbital Parameter Display Routine (R30) (para 4.8.1.2) may be called at this time.

CREW-MAN	PNL	PROCEDURES		REMARKS
		4.12.9 RCS STAGING (cont)		
		17. FL V37 N-- Key XXE, Exit P47		
		4.12.10 AGS FITH		Purpose of AGS FITH procedure is to compute preferred IMU orientation and LM attitude for APS thrust maneuver and to maneuver LM to thrusting attitude. This procedure controls PGNCS/AGS during countdown, ignition, staging, thrusting, and thrust termination.
		LGC Power-UP (required)		Ref para 4.6.1.1.
		LGC Self-Test (desired)		Ref para 4.6.1.13.
		LGC time valid (required)		LGC/CMC Clock Synchronization Routine (R33) (para 4.6.1.15)
		LGC state vector valid (required)		LGC Update Program (P27) (para 4.6.1.7) or LM Rendezvous Navigation Program (P20) (para 4.8.2.1)
		IMU Power-Up (LGC Operating) (required)		Ref para 4.6.1.3. ISS should be on 15 minutes before thrusting maneuver
		IMU Orientation Determination (P51) (required)		Ref para 4.9.1.1.
		DAP Data Load Routine (R03) (required)		Ref para 4.6.1.8.
		Appropriate prethrust program (required)		Ref para 4.7.
		MPS Basic (Staged) (required)		Ref para 4.13.3.2.
		ECS Prestaging Check (required)		Ref para 4.12.7.
		ED Prestaging Check (desired)		Ref para 4.12.6.

CREW-MAN	PNL	PROCEDURES		REMARKS
		4.12.10 AGS FITH (cont)		
		EPS Prestaging Check (required)		Ref para 4.12.5.
		APS Pressurization & Checkout (required)		Ref para 4.12.3 or 4.12.4.
			AGS Power-Up (required)	Ref para 4.6.2.1.
			AEA Self-Test (desired)	Ref para 4.6.2.3.
			AGS time valid (required)	AGS Initialization Routine (R47) (para 4.6.1.18) or AGS Manual Absolute Time Initialization procedure (para 4.6.2.6).
			AGS LM state vector valid (required)	AGS Initialization Routine (R47) (para 4.6.1.18) or AGS Manual Rendezvous Radar LM State Vector Update (para 4.8.2.2).
			AGS CSM state vector valid (required)	AGS Initialization Routine (R47) (para 4.6.1.18) or AGS Manual CSM State Vector Update/Initialization procedure (para 4.6.2.9).
			PGNCS/AGS Align (required)	Ref para 4.9.2.1.
			AGS Wb Vector Update (required if mission warrants)	Ref para 4.6.2.15.
			Appropriate prethrust procedure (required)	Ref para 4.7. If AGS TPI search prethrust was used, TPI excute must have been selected subsequently to be used here.
			MPS Basic (Staged) (required)	Ref para 4.13.3.2.
			ECS Prestaging Check (required)	Ref para 4.12.7.
			ED Prestaging Check (desired)	Ref para 4.12.6.
			EPS Prestaging Check (required)	Ref para 4.12.5.
			APS Pressurization & Checkout (required)	Ref para 4.12.3 or 4.12.4.

CREW-MAN	PNL	PROCEDURES		REMARKS
		4.12.10 AGS FITH (cont)		
			1. Establish attitude control: Key DEDA C 400+00000E GUID CONT sw - AGS S/C: AGS sw - AUTO PGNS sw - AUTO ROLL, PITCH, YAW sw - MODE CONT	
			2. Establish AGS total attitude & attitude error display: ATTITUDE MON sw (1) - AGS ATTITUDE MON sw (1) - PGNS RATE/ERR MON sw (2) - LDG RDR/CMPTR	Ref para 4.5.3.3 and 4.5.3.4.
			3. Enable ACA & TTCA: ACA/4 JET sw (2) - ENABLE TTCA/TRANSL sw (2) - ENABLE THROTTLE/JETS cont (2) - JETS ENG THR CONT: ATT/TRANSL sw - 4 JETS ACA PROP sw (2) - ENABLE	
			4. Prepare thrust controls for APS burn: ENG THR CONT: ENG ARM sw - OFF ABORT pb - reset ABORT STAGE pb - reset Eng START pb/lt - off Eng STOP pb/lt - reset	
			5. Deleted	
		1. Select P42: Key V37E 42E Poss FL V05 N09 - Alarm 01706 - Loaded DAP configuration indicates DPS has not staged. PROG lt - on To continue: Key PRO & RSET		

CREW-MAN	PNL	PROCEDURES		REMARKS
		4.12.10 AGS FITH (cont) To terminate: Key RSET & V34E FL V37N-- Key XXE, Exit P42		
		Poss PROG lt - on Key V05 N09E - Call alarm 00210 - IMU not on 00220 - ISS orientation not known Key KEY REL & RSET FL V37 N-- Key XXE, Exit P42		Perform IMU Power-Up (LGC Operating) (para 4.6.1.3). Alarm 220, perform IMU Orientation Determination Program (para 4.9.1.1).
		2. Attitude Maneuver Routine (R60)		To obtain optional display of VG (LV), perform following: Key V06 N86E R1 X XXXX.X fps R2 Y XXXX.X fps R3 Z XXXX.X fps At this time, LGC zeroes attitude error and sets 1° deadband in RCS DAP.
		FL V50 N18 - Perform automatic maneuver to final FDAI angles R1 Roll XXX.XX° R2 Pitch XXX.XX° R3 Yaw XXX.XX° Key ENTR		If computed final FDAI angles result in ±90° yaw, transformation from IMU to FDAI angles in roll and pitch is indeterminate and R1 and R2 will be zero.
		2A. FL V50 N25 - Checklist reference R1 00203 Switch to PGNCS automatic mode R2 ----- R3 ----- Key ENTR	6. Perform AGS Orientation to Initial Computed Steering Attitude.	Ref para 4.6.2.13.
		3. V06 N40 - R1 TFI XXBXX min-sec R2 VG XXXX.X fps		

CREW-MAN	PNL	PROCEDURES		REMARKS
		4.12.10 AGS FITH (cont)		
		R3 ΔVm XXXX.X fps CMPTR ACTY lt - on Monitor PROG lt from TFI = -00B50 to -00B35. If PROG lt - on: Key V05 N09E - Call alarm 01703 - TIG slipped		R3 displays 00000 until TFI = -00B30. V06 N40 displays are blanked from TFI = -00B35 to -00B30. CMPTR ACTY lt - on during State Vector Integration Routine (R41). If alarm 1703 occurs, beginning and duration of blanking cannot be defined.
		Key KEY REL & RSET CMPTR ACTY lt - off Update EVNT TMR ind if required.		a. If switchover to PGNCS occurs during or after burn, PGNCS will command engine off and attempt to perform burn XX seconds later. Thus, if AGS remains in control up to ignition time and EVNT TMR ind is not reset, PGNCS backup capability is lost. b. If EVNT TMR ind is reset per PGNCS procedure and AGS remains in control, results stated in "a" will follow. If alarm 1703 occurs and AGS is in control and PGNCS in followup, reset EVNT TMR ind and burn XX seconds later under AGS control, or switch to PGNCS and burn XX seconds after PRO.
			7. Monitor X-axis component of velocity to be gained (ΔVgx): Key DEDA C 500R (0.1/1 fps) S/C: DEAD BAND sw - MIN	Value will equal total velocity to be gained if LM is properly oriented for burn.
		4. When TFI = -00B29: V06 N40 R1 TFI XXBXX min-sec R2 VG XXXX.X fps R3 ΔVm XXXX.X fps		

CREW-MAN	PNL	PROCEDURES		REMARKS
		4.12.10 AGS FITH (cont)		
		Verify ΔVm <0.5 fps from TFI = -00B30 to 00B15.		
		If ΔVm >0.5 fps, terminate P42: Key V37E XXE, exit P42		ΔVm >0.5 fps indicates excessive PIPA bias error.
			8. ED: MASTER ARM sw - ON	
		5. When TFI = -00B05 FL V99 N40 - Engine on enable R1 TFI XXBXX min-sec R2 VG XXXX.X fps R3 ΔVm XXXX.X fps	9. When EVNT TMR ind = 00:08, initiate ullage maneuver with one of following:	Ullage time and ΔV depends on real-time ullage volume. During FL V99 N40, brief FL V06 may appear intermittently; this should be disregarded.
		Accept: when ΔVm >XXXX.X fps Key PRO	a. TTCA - move up until APS start	Complete protection against effects of single-point failure, which would cause engine to start as soon as it is armed, is not achieved unless ullage is completed before arming engine.
			b. +X TRANSL pb - push until APS start	
			Immediately on initiating ullage: ABORT STAGE pb - push ENG THR CONT: ENG ARM sw - ASC	
		Reject alternatives (in event of recycle to TIG -5 sec after staging):		
		a. Perform thrust with RCS Key ENTR, go to PGNCS step 12		
		or		
		b. Terminate Key V34E FL V37 N-- Key XXE, exit P42		
		6. V06 N40 R1 TFI XXBXX min-sec		

STAGIN

LM 3231

CREW-MAN	PNL	PROCEDURES		REMARKS
		4.12.10 AGS FITH (cont) R2 VG XXXX.X fps R3 ΔVm XXXX.X fps		
		7. When TFI = -00B00, monitor thrust.	10. When EVNT TMR ind = 00.00, monitor thrust.	
		7A. If no APS burn: Perform engine fail procedure (R40) If LGC detect thrust fail: FL V97 NXX - Perform engine fail procedure (noun & registers do not change) R1 XXXXX R2 XXXXX R3 XXXXX Key ENTR, return to step 5	If no APS burn: Eng START pb/lt - push	
		8. V06 N40 R1 TFC XXBXX min-sec R2 VG XXXX.X fps R3 ΔVm XXXX.X fps		
		TFC & VG decreasing, ΔVm increasing: Monitor FDAI. Poss PROG lt - on Key V05 N09E - call alarm 01407 - VG increasing (angle between actual thrust vector and desired thrust vector >90°) Key KEY REL & RSET	11. Monitor ΔVgx display on DEDA ENG THR CONT: BAL CPL sw - OFF	ΔVgx begins to count down at engine ignition. If VG is found to be increasing by LGC, engine-off command will not be generated.
		To switch to AGS control: GUID CONT sw - AGS ABORT STAGE pb - push Go to AGS step 12. If PGNCS in followup: Go to PGNCS step 12.	To switch to PGNCS control: GUID CONT sw - PGNS Go to PGNCS step 9.	TFC is discontinuous and ΔVm becomes fairly constant for 4 to 5 seconds.
		9. Perform APS/RCS Propellant Interconnect (para 4.13.3.3), steps 1 through 3.	12. Perform APS/RCS Propellant Interconnect, (para 4.13.3.3), steps 1 through 3.	

LM 3231

CREW-MAN	PNL	PROCEDURES		REMARKS
		4.12.10 AGS FITH (cont)		
		10. When TFC = TBD: Perform APS/RCS Propellant Interconnect (para 4.13.3.3), steps 4 & 5.	13. When ΔVgx = TBD: Perform APS/RCS Propellant Interconnect (para 4.13.3.3), steps 4 & 5.	
		11. Monitor thrust cutoff. a. Early cutoff: Return to step 7A. b. Late or manual cutoff Eng STOP pb/lt - push ABORT STAGE pb - reset ENG THR CONT: ENG ARM sw - OFF Eng STOP pb/lt - reset CB ED: LOGIC PWR A - open CB ED: LOGIC PWR B - open c. Normal cutoff: ABORT STAGE pb - reset ENG THR CONT: ENG ARM sw - OFF	14. Monitor thrust cutoff when ΔVgx display on DEDA reads -00000. If cutoff does not occur: Eng STOP pb/lt - push	Poss FL V97 NXX if LGC did not meet cutoff criteria.
			15. Disarm eng & disable AGS eng control: a. Early or normal cutoff: ABORT STAGE pb - reset ENG THR CONT: ENG ARM sw - OFF Eng STOP pb/lt - reset CB ED: LOGIC PWR A - open CB ED: LOGIC PWR B - open or b. Late cutoff: ABORT STAGE pb - reset ENG THR CONT: ENG ARM sw - OFF Eng STOP pb/lt - reset CB ED: LOGIC PWR A - open CB ED: LOGIC PWR B - open	Leaving ED: MASTER ARM sw - ON places inhibit on ED CWEA, preventing spurious master alarm indications (all pyros have been fired at this point). Opening CB's conserves electrical power.

STAGIN

CREW-MAN	PNL	PROCEDURES		REMARKS
		4.12.10 AGS FITH (cont)		
		To switch to AGS control: GUID CONT sw - AGS Go to AGS step 16.	To switch to PGNCS control: GUID CONT sw - PGNS Go to PGNCS step 12.	
		12. FL V16 N40 R1 TFC XXBXX min-sec R2 VG XXXX.X fps R3 ΔVm XXXX.X fps Record thrust parameters at their final value Key PRO		At this time, LGC zeroes attitude error and sets 0.3° deadband in RCS DAP.
		13. FL V16 N85 - VG (LM) R1 X XXXX.X fps R2 Y XXXX.X fps R3 Z XXXX.X fps		
		If PGNCS in followup: Go to PGNCS step 14.		
		If nulling of VG components is desired: S/C: PGNS sw - ATT HOLD ACA/TTCA - null VGX, VGY, & VGZ	16. Trim ΔV residual: Verify AGS attitude hold submode: Key DEDA C 400R If +00000 not displayed: Key DEDA C 400+00000E S/C: DEAD BAND sw - MIN ENG THR CONT: BAL CPL sw - ON Read and record: ΔVgx Key DEDA C 500R (0.1/1 fps) ΔVgy Key DEDA C 501R (0.1/1 fps) ΔVgz Key DEDA C 502R (0.1/1 fps) Read out and null ΔVg residuals in order of magnitude, largest first.	If trim maneuver is performed after use of orbit insertion routine, it should be performed immediately after engine shutdown. Orbit insertion routine drives LM to specific point on desired orbit and residual ΔVgx will increase naturally after engine shutdown. Null ΔVgx by moving TTCA up or down. Up nulls positive ΔVgx.

CREW-MAN	PNL	PROCEDURES		REMARKS
		4.12.10 AGS FITH (cont)		
				Null ΔVgy by moving TTCA right or left. Right nulls positive ΔVgy. Null ΔVgz by moving TTCA in or out. In nulls positive ΔVgz.
			S/C: DEAD BAND sw - MAX	
		14. Terminate P42 or select Orbit Parameter Display Routine (R30):	17. Read out predicted perifocus altitude: Key DEDA C 403R (0.1 nm) Compare with PGNCS Hp.	
		a. Terminate Key PRO FL V37 N-- Key XXE, exit P42	Read out apofocus altitude: Key DEDA C 315R (0.1 nm) Compare with PGNCS Ha.	At this time, LGC restores crew-specified (R03) deadband limits in RCS DAP.
		b. Initiate R30: Key V82E Poss OPR ERR lt - on Exit R30, key RSET FL V16 N44 R1 Ha XXXX.X nm R2 Hp XXXX.X nm R3 TFF XXBXX min-sec		OPR ERR lt - on if another extended verb from R76 is in process. Orbit parameters are recomputed every 2 seconds while average g routine is running. Maximum TFF reading is 59:59.
		Key PRO when finished with R30 to reestablish P42 N85 displays & exit R30. Key PRO FL V37 N-- Key XXE, exit P42		

STAGING

PARA	TITLE	PAGE
4.13	Subsystem Management	4.13-3
4.13.1	ECS	4.13-3
4.13.1.1	ECS Basic (Unstaged & Staged)	4.13-3
4.13.1.2	ECS Periodic Monitoring (Unstaged)	4.13-5
4.13.1.3	ECS Periodic Monitoring (Staged)	4.13-7
4.13.1.4	Secondary Coolant Loop (HTS) Activation	4.13-8
4.13.1.5	Primary LiOH Cartridge Replacement	4.13-9
4.13.1.6	Secondary LiOH Cartridge Replacement	4.13-10
4.13.1.7	Cabin Depressurization	4.13-11
4.13.1.8	Cabin Repressurization	4.13-13
4.13.1.9	Cabin Leak Check	4.13-14
4.13.1.10	LCG Recharge	4.13-14
4.13.1.11	Reverse O2 Umbilicals for PGA Cooling	4.13-15
4.13.1.12	H2O Dispenser Activation	4.13-16
4.13.1.13	Cabin Atmosphere Filtering	4.13-17
4.13.2	Communications	4.13-17
4.13.2.1	Communications Basic	4.13-17
4.13.2.2	S-Band Configuration for LOS	4.13-19
4.13.2.3	Relay Mode: EVA (Two-Man EVA)	4.13-20
4.13.2.4	Relay Mode: EVA (One-Man EVA)	4.13-21
4.13.2.5	Relay Mode: CSM Voice to MSFN	4.13-22
4.13.2.6	VHF B Data Enable	4.13-23
4.13.2.7	S-Band LBR Data Enable	4.13-23
4.13.2.8	S-Band CWEA Enable	4.13-23
4.13.2.9	DSEA Check	4.13-23
4.13.2.10	VHF Ranging Check	4.13-24
4.13.2.11	DUA Enable	4.13-25
4.13.2.12	DUA Disable	4.13-25
4.13.2.13	DUA Backup Voice Enable	4.13-26
4.13.2.14	DUA Backup Voice Disable	4.13-26
4.13.2.15	S-Band Antenna Cooldown	4.13-26
4.13.2.16	S-Band Operation in PTC Mode	4.13-26
4.13.3	Propulsion	4.13-28
4.13.3.1	MPS Basic (Unstaged)	4.13-28
4.13.3.2	MPS Basic (Staged)	4.13-28
4.13.3.3	APS/RCS Propellant Interconnect	4.13-29
4.13.3.4	DPS Periodic Monitoring	4.13-30
4.13.3.5	APS Periodic Monitoring	4.13-31
4.13.3.6	RCS Periodic Monitoring	4.13-34
4.13.4	EPS	4.13-35
4.13.4.1	EPS Basic (Unstaged)	4.13-35
4.13.4.2	EPS Basic (Staged)	4.13-36
4.13.4.3	EPS Preparation for DPS Burn	4.13-36
4.13.4.4	EPS Check, Post-DPS Burn	4.13-38
4.13.4.5	EPS Periodic Monitoring (Unstaged)	4.13-38
4.13.4.6	EPS Periodic Monitoring (Staged)	4.13-40
4.13.4.7	LCA Duty Cycle During Secondary Coolant Loop Operation	4.13-40
4.13.4.8	Lunar Stay Battery Management	4.13-41
4.13.5	Heaters Status Check	4.13-44
4.13.6	Set Event Timer	4.13-44
4.13.7	Waste Management	4.13-44
4.13.7.1	Transfer Urine to D/S Waste Container (Prime Mode)	4.13-45
4.13.7.2	Transfer Urine to D/S Waste Container (Alternative Mode)	4.13-46
4.13.7.3	Transfer Urine to Small Urine Collection Assembly	4.13-47
4.13.7.4	Emesis Disposal	4.13-48
4.13.7.5	Deleted	4.13-49/4.13-50
4.13.7.6	Defecation Disposal	4.13-49/4.13-50
4.13.8	Installation of 16-MM Sequence Camera Wedge	4.13-49/4.13-50
4.13.9	Window Shades (CDR, LMP, & Docking)	4.13-51/4.13-52

PARA	TITLE	PAGE
4.13.9.1	Deploy Shades	4.13-51/4.13-52
4.13.9.2	Stow Shades	4.13-51/4.13-52
4.13.10	Crash Bar Deployment	4.13-51/4.13-52
4.13.10.1	Unstow Crash Bar	4.13-51/4.13-52
4.13.10.2	Stow Crash Bar	4.13-51/4.13-52

CREW-MAN	PNL	PROCEDURES	REMARKS
		4.13 SUBSYSTEM MANAGEMENT	

Subsystem management procedures are a compilation of procedures that are common to more than one mission phase. The procedures involve basic switch configurations, integrity and status checks, servicing, and periodic monitoring. The procedures consist of the following:

Basic switch configurations of the ECS, communications, propulsion, and EPS

Integrity checks of cabin pressure, water separator, communications relay modes, data transmission and TV operation, and heaters status check.

Servicing of primary and secondary CO2 canisters

Periodic monitoring of ECS, DPS, APS, and RCS.

4.13.1 ECS

4.13.1.1 ECS Basic (Unstaged & Staged)

CAUTION

Due to interlock, #1 ASC 02 vlv cannot be set to OPEN before DES 02 vlv is set to CLOSE.

If DES 02 vlv cannot be set to CLOSE:
INTLK OVRD pb - push
#1 ASC 02 vlv - OPEN

Do not override this interlock until after vehicle is staged. To do otherwise would cause excessive loss of 02.

Do not perform ECS staged configuration prior to 30 minutes before staging. To do otherwise would unnecessarily deplete ascent stage consumables.

When PRESS REG A and/or B vlv - CLOSE, ensure handle is rotated to full hard stop position.

When positioning any faucet-type ECS valve to CLOSE position, ensure handle is rotated to full hard stop position.

CREW-MAN	PNL	PROCEDURES			REMARKS
		4.13.1.1 ECS Basic (Unstaged & Staged) (cont)			
			Unstaged	Staged	
	ECS	1. SUIT GAS DIVERTER vlv	PUSH CABIN	PULL EGRESS	During unstaged main engine burn: SUIT GAS DIVERTER vlv - PULL EGRESS CABIN GAS RETURN vlv - EGRESS
		CAUTION Rapid switching of CABIN REPRESS vlv from AUTO to CLOSE, or CLOSE to AUTO, causes loud bang. This does not damage valve. To change CABIN REPRESS vlv position, smooth, slow movement is recommended.			
		CABIN REPRESS vlv	AUTO	CLOSE	This step should be performed before selecting ascent 02 consumables, to prevent unnecessary use of ascent 02.
		LO PLSS FILL vlv	CLOSE	CLOSE	
		PRESS REG A vlv	CABIN	CABIN	During staging and ascent engine burn: PRESS REG A & B vlv - EGRESS
		PRESS REG B vlv	CABIN	CABIN	
		DES 02 vlv	OPEN	CLOSE	
		#1 ASC 02 vlv	CLOSE	OPEN	
		#2 ASC 02 vlv	CLOSE	CLOSE	
		SUIT ISOL vlv (LMP)	SUIT FLOW	SUIT FLOW	
		SUIT ISOL vlv (CDR)	SUIT FLOW	SUIT FLOW	
		SEC EVAP FLOW vlv	CLOSE	CLOSE	
		PRI EVAP FLOW #2 vlv	CLOSE	CLOSE	
		WATER TANK SELECT vlv	DES	ASC	
		SUIT TEMP vlv	adjust	adjust	
		ASC H20 vlv	CLOSE	OPEN	
		DES H20 vlv	OPEN	CLOSE	
		PRI EVAP FLOW #1 vlv	OPEN	OPEN	
		CABIN GAS RETURN vlv	AUTO	EGRESS	
		CO2 CANISTER SEL vlv	PRIM	PRIM	
		SUIT CIRCUIT RELIEF vlv	AUTO	AUTO	
		PRIM CO2 CANISTER cover	CLOSE	CLOSE	
		SEC CO2 CANISTER cover	CLOSE	CLOSE	
		WATER SEP SEL vlv	PUSH SEP I	PUSH SEP I	
		LIQUID GARMENT COOLING vlv	COLD	COLD	
	+Z27	HI PLSS 02 FILL vlv	CLOSE	CLOSE	
		2. Cabin relief & dump vlv (ovhd)	AUTO	AUTO	
		Cabin relief & dump vlv (fwd)	AUTO	AUTO	

CREW-MAN	PNL	PROCEDURES			REMARKS
		4.13.1.1 ECS Basic (Unstaged & Staged) (cont)			
			Unstaged	Staged	
CDR	11	3. CB ECS:			
		SUIT FAN 1	close	close	
		CABIN FAN	open	open	
		GLYCOL PUMP 2	close	close	
		GLYCOL PUMP 1	close	close	
		GLYCOL PUMP AUTO TRNFR	open	open	GLYCOL PUMP AUTO TRNFR closed during lunar surface operation.
LMP	2	4. GLYCOL sel	PUMP 1	PUMP 1	
		SUIT FAN sel	1	1	
		O2/H2O QTY MON sel	DES 2	ASC 1	
		ECS:			
		PRESS ind pwr fail lt	off	off	
	2	GLYCOL ind pwr fail lt	off	off	
		QUANTITY ind pwr fail lt	off	off	
		GLYCOL comp caut lt	off	off	
		SUIT FAN comp caut lt	off	off	
		CO2 comp caut lt	off	off	
		H2O SEP comp caut lt	off	off	
	16	5. CB ECS:			
		SUIT FLOW CONT	close	close	
		DISP	close	close	
		GLYCOL PUMP SEC	open	open	
		LCG PUMP	crew option	crew option	CB ECS: LCG PUMP - open at least 30 minutes before sleep period.
		CABIN FAN CONT	close	close	
		CABIN REPRESS	close	close	
		SUIT FAN 2	close	close	
		SUIT FAN ΔP	close	close	
		DIVERT VLV	close	close	
		CO2 SENSOR	close	close	
		4.13.1.2 ECS Periodic Monitoring (Unstaged)			Assumption: ECS Basic (Unstaged).
	2	1. ECS:			
		CABIN TEMP ind - 42° to 90°F			
		PRESS ind pwr fail lt - off			
		SUIT PRESS ind - 4.6 to 5.0 psia			
		CABIN PRESS ind - 4.6 to 5.0 psia			
		PART PRESS CO2 ind - <7.6 mm Hg			MASTER ALARM, ECS caut lt, and CO2 comp caut lt go on when 2.274±0.025 volts is sensed at CWEA comparator.

SUBSY MGMT

CREW-MAN	PNL	PROCEDURES	REMARKS
		4.13.1.2 ECS Periodic Monitoring (Unstaged) (cont)	
			When sensed at 5.0 psia, actual CO2 partial pressure could be between 4.06 and 9.30 mm Hg when MASTER ALARM, ECS caut lt, and CO2 comp caut lt go on. ECS: PART PRESS CO2 ind will read nominally 7.6 mm Hg at this time.
			When sensed at 3.7 psia, actual CO2 partial pressure could be between 5.21 and 12.6 mm Hg when MASTER ALARM, ECS caut lt, and CO2 comp caut lt go on. ECS: PART PRESS CO2 ind will read nominally 7.6 mm Hg at this time.
	2	GLYCOL ind pwr fail lt - off GLYCOL temp ind - 33° to 49°F GLYCOL press ind - 21 to 37 psia GLYCOL comp caut lt - off SUIT FAN comp caut lt - off CO2 comp caut lt - off H2O SEP comp caut lt - off	
		2. O2/H2O QTY MON sel - DES 2 ECS: QUANTITY ind pwr fail lt - off O2 QUANTITY ind - TBD% H2O QUANTITY ind - TBD%	Quantity of consumables displayed is function of mission elapsed time.
		3. O2/H2O QTY MON sel - DES 1 ECS: QUANTITY ind pwr fail lt - off O2 QUANTITY ind - TBD% H2O QUANTITY ind - TBD%	Quantity of consumables displayed is function of mission elapsed time.
		4. O2/H2O QTY MON sel - ASC 1 ECS: O2 QUANTITY ind - approx 100% H2O QUANTITY ind - approx 76%	Assumption: H2O tank fill ratio is 0.75.
		5. O2/H2O QTY MON sel - ASC 2 ECS: O2 QUANTITY ind - approx 100% H2O QUANTITY ind - approx 76%	Assumption: H2O tank fill ratio is 0.75.
		6. O2/H2O QTY MON sel - DES 2	

CREW-MAN	PNL	PROCEDURES	REMARKS
		4.13.1.3 ECS Periodic Monitoring (Staged)	
LMP	2	1. ECS: CABIN TEMP ind - 42° to 90°F PRESS ind pwr fail lt - off SUIT PRESS ind - 4.6 to 5.0 psia CABIN PRESS ind - 4.6 to 5.0 psia	
		PART PRESS CO2 ind - <7.6 mm Hg	MASTER ALARM, ECS caut lt, and CO2 comp caut lt go on when 2.274±0.025 volts is sensed at CWEA comparator. When CO2 partial pressure is sensed as 5.0 psia, actual CO2 partial pressure could be between 5.35 and 8.25 mm Hg. When sensed at 5.0 psia, actual CO2 partial pressure could be between 4.06 and 9.30 mm Hg when MASTER ALARM, ECS caut lt, and CO2 comp caut lt go on. ECS: PART PRESS CO2 ind will read nominally 7.6 mm Hg at this time. When sensed at 3.7 psia, actual CO2 partial pressure could be between 5.21 and 12.6 mm Hg when MASTER ALARM, ECS caut lt, and CO2 comp caut lt go on. ECS: PART PRESS CO2 ind will read nominally 7.6 mm Hg at this time.
	2	GLYCOL ind pwr fail lt - off GLYCOL temp ind - 33° to 49°F GLYCOL press ind - 21 to 37 psia GLYCOL comp caut lt - off SUIT FAN comp caut lt - off CO2 comp caut lt - off H2O SEP comp caut lt - off	
		2. O2/H2O QTY MON sel - ASC 1 ECS: QUANTITY ind pwr fail lt - off O2 QUANTITY ind - TBD% H2O QUANTITY ind - TBD%	Quantity of consumables displayed is function of mission elapsed time.
		3. O2/H2O QTY MON sel - ASC 2 ECS: O2 QUANTITY ind - approx 100% H2O QUANTITY ind - TBD%	
		4. O2/H2O QTY MON - ASC 1	

SUBSYS MGMT

CREW-MAN	PNL	PROCEDURES	REMARKS
		4.13.1.4 Secondary Coolant Loop (HTS) Activation	Activation of heat transport section secondary coolant loop assumes either failure of both primary glycol pumps, loss of primary glycol, or inability to maintain primary glycol loop temperature below +50°F. GLYCOL comp caut lt remains on after secondary coolant loop is activated. Following are not cooled by secondary coolant loop: LGC — DSEA CDU — PTA PSA — Descent batteries GASTA — Cabin LCA — Descent ECA (2) IMU
	ECS	1. WATER TANK SELECT vlv - SEC	
LMP	16	2. CB ECS: GLYCOL PUMP SEC - close	
	2	3. GLYCOL sel - INST (SEC) ECS caut lt - off	
	ECS	4. SEC EVAP FLOW vlv - open	
CDR	11	5. CB ECS: GLYCOL PUMP 2 - open GLYCOL PUMP 1 - open GLYCOL PUMP AUTO TRNFR - open	
LMP	ECS	6. PRI EVAP FLOW #1 vlv - CLOSE PRI EVAP FLOW #2 vlv - CLOSE ASC H20 vlv - OPEN DES H20 vlv - CLOSE	
	16 CDR 11	7. CB ECS: LCG PUMP - open CABIN FAN - open	

CREW-MAN	PNL	PROCEDURES	REMARKS
		4.13.1.5 Primary LiOH Cartridge Replacement	Ascent engine cover must be cleared of stowed equipment to gain access to LiOH cartridge.
		CAUTION If LiOH cartridge is replaced while cabin is depressurized, perform steps 1 & 2.	
	16	1. Verify following: CB ECS: SUIT FLOW CONT - close CABIN REPRESS - open	
	ECS	2. CABIN REPRESS vlv - AUTO	
LMP	ECS 2	3. CO2 CANISTER SEL vlv - SEC CO2 comp caut lt - on ECS caut lt - off	
		4. ECS: PART PRESS CO2 ind - monitor	ECS: PART PRESS CO2 ind should indicate pressure decay to zero mm Hg.
	ECS	5. PRIM CO2 CANISTER VENT pb - push	Step 5 vents ΔP across canister.
		6. Grasp primary CO2 canister cover handle, press latch trigger with thumb & hold.	
		7. Rotate primary CO2 canister cover counterclockwise to detent, so that index on handle covers index on canister cover & aligns with OPEN index on canister rim. Release latch trigger.	
		8. Verify cover is in OPEN detent & remove from canister.	
LMP		9. Rotate & remove LiOH cartridge from canister.	
		10. Open primary LiOH stowage container & remove unused cartridge. Insert used cartridge in stowage container & secure cover.	
		11. Insert unused cartridge in primary CO2 canister, align lugs, & rotate cartridge to secure in canister.	
		12. Install primary CO2 canister & verify index on handle covers index on canister cover (OPEN detent position).	
		13. Align indexes on canister cover with index on canister rim.	

SUBSYS MGMT

CREW-MAN	PNL	PROCEDURES	REMARKS
		4.13.1.5 Primary LiOH Cartridge Replacement (cont)	
		14. Grasp primary CO2 canister cover handle press latch trigger, & rotate cover clockwise.	
		15. Release trigger, verify primary CO2 canister cover is in CLOSED detent & handle index is aligned with CLOSE index on canister rim.	
	ECS	16. CO2 CANISTER SEL vlv - PRIM	
	2	17. CO2 comp caut lt - off	
		18. ECS: PART PRESS CO2 ind - monitor	Perform ARS/PGA Pressure Integrity Check procedure (para 4.2.16).
		4.13.1.6 Secondary LiOH Cartridge Replacement	Ascent engine cover must be cleared of stowed equipment to gain access to LiOH cartridge.
		CAUTION	
		If LiOH cartridge is replaced while cabin is depressurized, perform steps 1 & 2. If depressurized & staged, omit step 2.	There is no spare secondary LiOH cartridge in cabin until spare from descent stage is stowed in cabin after lunar touchdown.
LMP	16	1. Verify following CB ECS: SUIT FLOW CONT - close CABIN REPRESS - open	PLSS LiOH cartridge must be used as replacement in ECS, if replacement is attempted in orbit.
	ECS	2. CABIN REPRESS vlv - AUTO	
		3. CO2 CANISTER SEL vlv - PRIM CO2 comp caut lt - off	
	ECS	4. SEC CO2 CANISTER VENT pb - push	Step 4 vents ΔP across canister.
		5. Grasp secondary CO2 canister cover handle, press latch trigger with thumb & hold.	
		6. Rotate cover counterclockwise to detent, so that index on handle covers index on cover & aligns with OPEN index on canister rim. Release latch trigger.	
		7. Verify cover is in OPEN detent & remove from canister.	

CREW-MAN	PNL	PROCEDURES	REMARKS
		4.13.1.6 Secondary LiOH Cartridge Replacement (cont)	
		8. Rotate & remove LiOH cartridge from canister.	
		9. Insert fresh secondary LiOH cartridge in canister, align lugs & rotate cartridge to secure in canister.	
		10. Install canister cover & verify index on handle covers index on cover (OPEN detent position).	
LMP		11. Align indexes on cover with index on canister rim.	
		12. Grasp cover handle, depress latch trigger & rotate cover clockwise.	
		13. Release trigger. Verify cover is in close detent position, with handle index aligned with CLOSE index on canister rim.	
	ECS	14. CO_2 CANISTER SEL vlv - SEC	
	2	15. CO_2 comp caut lt - on	
		16. ECS: PART PRESS CO_2 ind - <7.6 mm Hg	
		4.13.1.7 Cabin Depressurization	
CDR/ LMP		1. Verify ECS Basic (Unstaged)	Ref para 4.13.1.1.
		2. Perform ARS/PGA Pressure Integrity Check.	Ref para 4.2.16.
LMP	ECS	3. PRESS REG A & B vlv - EGRESS	This automatically deactivates cabin fan.
		CAUTION Rapid switching of CABIN REPRESS vlv from AUTO to CLOSE, or CLOSE to AUTO, causes loud bang. This does not damage valve. To change CABIN REPRESS vlv position, smooth, slow movement is recommended.	
		4. CABIN REPRESS vlv - AUTO	
		5. SUIT GAS DIVERTER vlv - PULL EGRESS	
		6. CABIN GAS RETURN vlv - EGRESS	

SUBSY MCM

CREW-MAN	PNL	PROCEDURES	REMARKS
		4.13.1.7 Cabin Depressurization (cont)	
CDR		7. Cabin relief & dump vlv (ovhd) - OPEN (applicable for docked vehicle only)	Depressurizes docking tunnel during cabin depressurization.
	11	8. CB ECS: CABIN FAN - open	Prevents activation of cabin fan in depressurized cabin.
	16	9. CB ECS: CABIN REPRESS - open	
	ECS	10. Cabin relief & dump vlv (fwd or ovhd) - Cycle from AUTO to OPEN until cabin pressure is reduced to approx 3.2 psia	Forward or overhead cabin relief and dump valve may be used to depressurize cabin, if undocked (forward only if docked).
		11. Cabin relief & dump vlv (fwd & ovhd) - AUTO	
LMP	2	12. ECS: SUIT PRESS ind - 3.6 to 4.3 psia	During cabin depressurization, SUIT CIRCUIT RELIEF vlv closes when ARS pressure drops to 4.3 psia. To verify proper operation (closure) of valve, cabin pressure must be below 4.3 psia.
CDR	ECS	13. Cabin relief & dump vlv (fwd or ovhd) - OPEN & reduce cabin pressure to zero psia	Forward hatch can be opened within 2 minutes after cabin relief and dump vlv (fwd or ovhd) - OPEN (cabin pressure <0.08 psia).
LMP	16	14. CB ECS: SUIT FLOW CONT - open (one-man EVA only)	
CDR	ECS	15. Cabin relief & dump vlv (fwd) - AUTO	
		16. Cabin relief & dump vlv (ovhd) - AUTO	
		CAUTION Rapid switching of CABIN REPRESS vlv from AUTO to CLOSE, or CLOSE to AUTO, causes loud bang. This does not damage valve. To change CABIN REPRESS vlv position, smooth, slow movement is recommended.	
		17. CABIN REPRESS vlv - CLOSE	

CREW-MAN	PNL	PROCEDURES	REMARKS
		4.13.1.8 Cabin Repressurization	Assumption: LM is unstaged.
CDR	ECS	1. Cabin relief & dump vlv (fwd) - AUTO	
		2. Cabin relief & dump vlv (ovhd) - AUTO	
		CAUTION Rapid switching of CABIN REPRESS vlv from AUTO to CLOSE, or CLOSE to AUTO, causes loud bang. This does not damage valve. To change CABIN REPRESS vlv position, smooth, slow movement is recommended.	
		3. CABIN REPRESS vlv - AUTO	
LMP	16	CB ECS: CABIN REPRESS - close	
	1,2	MASTER ALARM - on	
	1	CABIN warn lt - on	
	ECS	CABIN REPRESS vlv opens	
		4. PRESS REG A vlv - CABIN	
CDR	1	5. MASTER ALARM pb/lt - reset	PLSS high O2 flow warning tone - on (3000-cps warble) if active PLSS is connected to PGA.
LMP	ECS	6. PRESS REG B vlv - CABIN	
	1	7. CABIN warn lt - off	CABIN REPRESS vlv closes and CABIN warn lt goes off when pressure reaches 4.4 to 5.0 psia.
		8. Verify cabin pressure stabilizes at 4.8±0.2 psia.	Cabin pressure stabilizes approximately 2 minutes after CABIN REPRESS vlv closes.
	ECS	9. Return to ECS Basic (Unstaged), except: CABIN GAS RETURN vlv - AUTO before SUIT GAS DIVERTER vlv - PUSH CABIN	Ref para 4.13.1.1. Reversing this sequence may cause suit fan to stall and water separator to slow down, causing: MASTER ALARM - on ECS caut lt - on SUIT FAN comp caut lt - on H2O SEP comp caut lt - on

SUBSYS MGMT

CREW-MAN	PNL	PROCEDURES	REMARKS
		4.13.1.9 Cabin Leak Check	Assumptions: (1) ECS Basic (Unstaged) and (2) undocked LM. Task can be accomplished in parallel with other non-ECS tasks, to save time.
LMP	ECS	1. PRESS REG A & B vlv - EGRESS	Action sets SUIT GAS DIVERTER vlv to PULL EGRESS and turns off cabin fan. If operation of cabin fan is desired: CB ECS: CABIN FAN CONT - open
	2	2. ECS: CABIN PRESS ind - monitor periodically (2 hours)	
		3. ECS: CABIN PRESS ind - decay <0.6 psia	A 0.6-psia pressure decay is based on cabin free volume of 235 cubic feet, cabin initially at 4.8 psia and leaking 0.2 pound of 02 per hour. Corrections must be made for fluctuations in cabin temperature and for metabolic consumption. MSFN can verify specified leakage rates with only 30 minutes of monitoring cabin pressure.
		4. Controls - ECS Basic (Unstaged)	Ref para 4.13.1.1. When performing ECS Basic procedure, CABIN GAS RETURN vlv - AUTO before SUIT GAS DIVERTER vlv - PUSH CABIN. Reversing this sequence may cause suit fan to stall and water separator to slow down causing: MASTER ALARM - on ECS caut lt - on SUIT FAN comp caut lt - on H20 SEP comp caut lt - on
		4.13.1.10 Contingency LCG Recharge	Assumptions: (1) LCG leak has been isolated and corrective action taken, and (2) crewman is wearing LCG and PGA.
		WARNING Do not perform LCG recharge until MSFN verifies LM water pressure is <37 psia.	The LCG will be subjected to LM water tank pressure which may be as high as 48 psia.
		1. Verify with MSFN that sufficient water is available to perform LCG recharge.	
		2. Verify RCU pump, fan and mode select switches - OFF.	
		3. Connect RCU to PLSS.	
		4. Connect PLSS water hose to PGA water connector.	PLSS must be upright, conformal side facing crewman.

LM 2[illegible]3

CREW-MAN	PNL	PROCEDURES	REMARKS
		4.13.1.10 Contingency LGC Recharge (cont)	
	PLSS	5. H2O DIVERTER vlv - MAX (aft)	
	PLSS	6. H2O SHUTOFF AND RELIEF vlv - CLOSED (fwd)	
	ECS	7. DES H2O vlv - CLOSE	
		8. Disconnect water dispenser & stow.	
		9. Connect LM water recharge hose to PLSS H2O fill connector.	
	ECS	10. DES H2O vlv- OPEN	
	PLSS	11. PUMP sw - ON	
		12. Activate PLSS gas trap by depressing button until water flows through vent hole, then release button; wait 10 seconds then repeat. Continue button depress cycle until water flows immediately upon depressing button.	LGC is full when water flows immediately upon depressing button.
	PLSS	13. PUMP sw - OFF	
	ECS	14. DES H2O vlv - CLOSE	
		15. Disconnect PLSS water hose form PGA.	
		16. Disconnect LM water recharge hose from PLSS.	
		17. Disconnect PLSS water hose from PGA.	
		18. Verify RCU pump, fan and mode select switches - OFF.	
		19. Disconnect RCU from PLSS.	
		20. Connect water dispenser to LM water recharge hose.	
	ECS	21. DES H2O vlv - OPEN	

SUBSYS MGMT

LM 2018, LM 3215

CREW-MAN	PNL	PROCEDURES	REMARKS
		4.13.1.11 Reverse O2 Umbilicals for PGA Cooling	Purpose of Reverse O2 Umbilicals for PGA Cooling procedure is to provide body cooling during periods necessitating helmet-off operations.
		WARNING Umbilicals must not be reversed for normal helmet-on operations.	
CDR/ LMP		1. Remove helmet & gloves.	
	ECS	2. SUIT ISOL vlv - SUIT DISC	
		3. Disconnect LM O2 umbilicals from PGA.	
		4. Connect LM O2 umbilicals to PGA (red to blue, blue to red).	
		5. SUIT ISOL vlv - SUIT FLOW & verify O2 flow	
		5a. SUIT GAS DIVERTER vlv - PULL EGRESS CABIN GAS RETURN vlv - EGRESS PGA DIVERTER vlvs - horizontal	For water separator speed control.
	ECS	6. When activity is completed: SUIT ISOL vlv - SUIT DISC	
		7. Disconnect LM O2 umbilicals from PGA.	
		8. Connect LM O2 umbilicals to PGA (red to red, blue to blue).	
	ECS	9. SUIT ISOL vlv - SUIT FLOW & verify O2 flow.	
		9a. CABIN GAS RETURN vlv - AUTO SUIT GAS DIVERTER vlv - PUSH CABIN	
		10. Don helmet & gloves.	
		4.13.1.12 H20 Dispenser Activation	Assumption: H20 dispenser is connected to spacecraft H20 hose before launch. H20 dispenser serves as fire extinguisher when slide safety is disengaged and fire extinguisher valve is actuated.

LM 3215

CREW-MAN	PNL	PROCEDURES	REMARKS
		4.13.1.12 <u>H2O Dispenser Activation (cont)</u>	
		1. Unstow H2O dispenser.	
	ECS	2. DES H2O vlv - OPEN (unstaged) or ASC H2O vlv - OPEN (staged)	Both valves must be closed before disconnecting H2O dispenser from H2O hose.
		3. Use H2O dispenser as required.	
		4. Stow H2O dispenser.	

SUBSYS MGMT

LM 3223

CREW-MAN	PNL	PROCEDURES	REMARKS
		4.13.1.13 Cabin Atmosphere Filtering	Assumptions: (1) Cabin is pressurized to 4.8±0.2 psia and (2) free-floating lunar dust is present in cabin.
		CAUTION Limit fan operating time to 2 hours maximum after lunar ascent.	
	16 11	1. Fan Activation: CB ECS: CABIN FAN CONT - open CB ECS: CABIN FAN - close	Allows fan operation regardless of O2 demand regulators settings.
		2. Fan Deactivation: CB ECS: CABIN FAN - open	
		4.13.2 COMMUNICATIONS	
		4.13.2.1 Communications Basic	Assumption: Initial communications checks complete.
		CAUTION CB COMM: SE AUDIO must be closed to transmit on VHF A and/or operate DSEA. CB must be opened when LMP connects or disconnects LM comm cable & COMM: TLM BIOMED sw - OFF or LEFT.	If electromagnetic interference in system is identified as caused by tracking light (regular pulses on audio channel or indicated on SIGNAL STRENGTH ind at approximate frequency of 1 pps), tracking light may be turned off until transmission or reception is complete.
		CB COMM: CDR AUDIO must be closed to transmit voice on VHF B. CB must be opened when CDR connects or disconnects LM comm cable & COMM: TLM BIOMED sw - OFF or RIGHT.	
CDR	11	1. CB/AC BUS B: S BD ANT - close CB/AC BUS A: TAPE RCDR - close CB COMM: UP DATA LINK - close SEC S BD XMTR/RCVR - close SEC S BD PWR/AMPL - close VHF B XMTR - close VHF A RCVR - close CDR AUDIO - Close	COMM: S BAND PWR AMPL sw controls transmitted PM carrier modulation index for both subcarriers (1.024 and 1.25 mc).

SUBSYS MGMT

LM 3223

CREW-MAN	PNL	PROCEDURES	REMARKS
		4.13.2.1 Communications Basic (cont)	
	8	2. AUDIO: S BAND T/R sw - S BAND T/R ICS T/R sw - ICS T/R RELAY ON sw - RELAY OFF MODE sw - ICS /PTT AUDIO CONT sw - NORM VHF A sw - T/R VHF B sw - OFF	
	16	3. CB COMM: DISP - close SE AUDIO - close VHF A XMTR - close VHF B RCVR - close PRIM S BD PWR AMPL - close PRIM S BD XMTR/RCVR - close S BD ANT - close PMP - close TV - open CB HTR: S BD ANT - close CB CAMR: SEQ - open	Opening CB COMM: DISP while communicating via S-band causes apparent drop in receiver signal strength read by MSFN (GT0994), due to change in telemetry AGC.
	14	4. COMM: UPLINK SQUELCH sw - as desired	
	12	5. UP DATA LINK sw - OFF AUDIO: S BAND T/R sw - S BAND T/R ICS T/R sw - ICS T/R RELAY ON sw - RELAY OFF MODE sw - ICS/PTT AUDIO CONT sw - NORM VHF A sw - T/R VHF B sw - OFF	
		6. COMM: S BAND MODULATE sw - PM S BAND XMTR/RCVR sw - SEC S BAND PWR AMPL sw - PRIM S BAND VOICE sw - VOICE	

Subcarrier Modulation Index vs Switch position

SW POS / SUBCAR	PRIM	OFF	SEC
1.024 mc	High	Low	High
1.25 mc	Low	High	Low
1.25 mc	Low		Low
low power	CB COMM: PRIM S BD PWR AMPL - open	-	CB COMM: SEC S BD PWR AMPL - open

CREW-MAN	PNL	PROCEDURES	REMARKS
		4.13.2.1 Communications Basic (cont) S BAND PCM sw - PCM S BAND RANGE sw - OFF/RESET VHF A XMTR sw - VOICE VHF A RCVR sw - ON VHF B XMTR sw - OFF VHF B RCVR sw - OFF TLM BIOMED sw - as required TLM PCM sw - HI RECORD sw - OFF NOTE Recorder, when enabled, runs continuously when AUDIO: MODE sw is set to ICS/PTT. Total running time is 10 hours.	
LMP	12	7. Verify COMM ANT: TRACK MODE sw - AUTO PITCH cont - computed angle YAW cont - computed angle S BAND sel - SLEW VHF sel - AFT or FWD	Ref para 4.2.21 for AOS procedure. Computed angles are set before switching to AUTO.
		4.13.2.2 S-Band Configuration for LOS	
LMP	12	1. Immediately before LOS, configure: COMM ANT: PITCH cont - 90° YAW cont - 0° COMM: TLM PCM sw - LO S BAND VOICE sw - DN VOICE BU TLM BIOMED sw - OFF COMM ANT: TRACK MODE sw - OFF S BAND sel - AFT or FWD TRACK MODE sw - SLEW	Antenna shall not be permitted to drive into gimbal stops. If left in automatic track mode, antenna will drive into gimbal stops when signal is lost during lunar orbit (LOS). Operation at stops for periods longer than 3 minutes may result in degraded reliability or failure due to possible overheating. Caution and warning temperature sensor is not expected to react rapidly enough to reflect this thermal transient condition. Steerable antenna shall remain in off mode for 10 minutes before reactivating, to permit cooldown. If antenna drives to, and remains in, stops for period of 3 minutes or longer, antenna must be deactivated for period of 10 minutes to allow temperature to decay to acceptable limits of operation. Ref para 4.13.2.15.

CREW-MAN	PNL	PROCEDURES	REMARKS
		4.13.2.2 S-Band Configuration for LOS (cont)	
		PITCH cont - computed angle YAW cont - computed angle	Computed angle from MSFN.
		4.13.2.3 Relay Mode: EVA (Two-Man EVA)	Task provides full conference capability between EVA. LM, CSM, and MSFN.
		CAUTION CB COMM: SE AUDIO must be closed to transmit on VHF A and/or operate DSEA. CB must be opened when LMP connects or disconnects LM comm cable & COMM: TLM BIOMED sw - OFF or LEFT. CB COMM: CDR AUDIO must be closed in order to transmit voice on VHF B. CB must be opened when CDR connects or disconnects LM comm cable & COMM: TLM BIOMED sw - OFF or RIGHT.	
CDR	8	1. Controls - Communications Basic, except: AUDIO: VHF A sw - OFF MODE sw - VOX VOX SENS tw - 9	
LMP	12	AUDIO: VHF B sw - RCV RELAY ON sw - RELAY ON MODE sw - VOX VOX SENS tw - 9	
		2. COMM: VHF B RCVR sw - ON VHF A SQUELCH tw - noise threshold + 1-1/2 div VHF B SQUELCH tw - noise threshold + 1-1/2 div TLM BIOMED sw - OFF RECORDER sw - as desired	
		3. Assure EVA antenna is deployed.	

CREW-MAN	PNL	PROCEDURES	REMARKS
		4.13.2.3 Relay Mode: EVA (Two-Man EVA) (cont)	
		4. COMM ANT: VHF sel - EVA S BAND sel - SLEW (LUNAR STAY when erectable antenna is deployed)	
		5. On completion of Relay Mode: EVA (Two-Man EVA), return to Communications Basic.	Assumption: Both extravehicular astronauts returned to vehicle together. Ref para 4.13.2.1.
		4.13.2.4 Relay Mode: EVA (One-Man EVA)	
		CAUTION CB COMM: SE AUDIO must be closed to transmit on VHF A and/or operate DSEA. CB must be opened when LMP connects or disconnects LM comm cable & COMM: TLM BIOMED sw - OFF or LEFT. CB COMM: CDR AUDIO must be closed to transmit voice on VHF B. CB must be opened when CDR connects or disconnects LM comm cable & COMM: TLM BIOMED sw - OFF or RIGHT	
		1. Controls - Communications Basic, except:	
NON-EVA		AUDIO: VHF B sw - RCV MODE sw - VOX VOX SENS tw - 9	
EVA		AUDIO: VHF B sw - RCV MODE sw - VOX VOX SENS tw - 9 RELAY ON sw - RELAY ON	
	12	2. COMM: VHF B RCVR sw - ON VHF A SQUELCH tw - noise threshold + 1-1/2 div VHF B SQUELCH tw - noise threshold + 1-1/2 div TLM BIOMED sw - non-EVA crewman RECORDER sw - as desired	

CREW-MAN	PNL	PROCEDURES	REMARKS
		4.13.2.4 Relay Mode: EVA (One-Man EVA) (cont)	
		3. Ensure EVA antenna is deployed.	
		4. COMM ANT: VHF sel - EVA S BAND sel - SLEW	
		5. On completion of Relay Mode: EVA (One-Man EVA), return to Communications Basic.	Ref para 4.13.2.1.
		4.13.2.5 Relay Mode: CSM Voice to MSFN	
		CAUTION CB COMM: SE AUDIO must be closed to transmit on VHF A and/or operate DSEA. CB COMM: CDR AUDIO must be closed in order to transmit voice on VHF B.	
CDR	8	1. Controls - Communications Basic, except: AUDIO: VHF B sw - RCV MODE sw - VOX	
LMP	12	AUDIO: VHF B sw - RCV S BAND T/R sw - RCV RELAY ON sw - ON MODE sw - VOX COMM: VHF A XMTR sw - VOICE/RNG VHF A RCVR sw - OFF VHF B XMTR sw - OFF VHF B RCVR sw - ON	
		2. On completion of Relay Mode: CSM Voice to MSFN, return to Communications Basic	Ref para 4.13.2.1.

CREW-MAN	PNL	PROCEDURES	REMARKS
		4.13.2.6 VHF B Data Enable	
CDR	11	1. CB COMM: VHF B XMTR - close	
LMP	12	2. COMM: VHF B XMTR sw - DATA TLM PCM sw - LO	
		4.13.2.7 S-Band LBR Data Enable	
LMP	12	1. Controls - Communications Basic, except: COMM: S BAND VOICE sw - DN VOICE BU TLM PCM sw - LO TLM BIOMED sw - OFF COMM ANT: S BAND sel - FWD or AFT	
		2. On completion of S-Band LBR Data Enable, return to Communications Basic.	Ref para 4.13.2.1.
		4.13.2.8 S-Band CWEA Enable	
		Communications Basic (required)	Ref para 4.13.2.1.
LMP	12	1. COMM: S BAND RANGE sw - RANGE, OFF/RESET, TV/CWEA ENABLE	Switch must be cycled to prevent false MASTER ALARM.
		2. When S-band CWEA function is no longer needed: COMM: S BAND RANGE sw - OFF/RESET	
		4.13.2.9 DSEA Check	
		CAUTION CB COMM: SE AUDIO must be closed to transmit on VHF A and/or operate DSEA. CB COMM: CDR AUDIO must be closed to transmit voice on VHF B.	
	12	1. Controls - Communications Basic, except: COMM: RECORDER sw - ON	

SUBSYS MGMT

CREW-MAN	PNL	PROCEDURES	REMARKS
		4.13.2.9 DSEA Check (cont)	
		2. Transmit voice (VOX or PTT).	With ICS/PTT selected on either audio center, DSEA will run continuously when COMM: RECORDER sw - ON.
		3. COMM: RECORDER TAPE tb - gray during voice transmissions	Talkback will be gray under following conditions: 1. First 4 seconds of power application 2. While recording (speaking) on track 1 3. Any time that tape is in motion on other than track 1, providing corresponding section of track 1 has voice recorded on it.
		CAUTION When operating DSEA with either AUDIO: MODE sw - VOX, do not set either switch to ICS/PTT while talking; DSEA may stop. If DSEA stops, COMM: RECORDER sw - cycle.	
		4. On completion of DSEA Check, return to Communications Basic.	Ref para 4.13.2.1.
		4.13.2.10 VHF Ranging Check	VHF Ranging check is performed at CSM direction. Check consists of CSM transmission of VHF signal to LM, and CSM receipt of turnaround signal.
		CAUTION CB COMM: SE AUDIO must be closed to transmit on VHF A and/or operate DSEA. CB COMM: CDR AUDIO must be closed to transmit voice on VHF B.	LM is undocked from CSM. Effective range limits: Minimum - 500 feet Maximum - 200 nm
LMP	12	1. At CSM request, controls - Communications Basic, except: COMM: VHF A XMTR sw - VOICE/RNG VHF B RCVR sw - ON	Hot mike condition exists on VHF A when AUDIO: VHF A sw - T/R during VHF ranging operations. Phase-lock acquisition requires 14 seconds after CSM initiation.
	8,12	2. AUDIO: VHF A sw - OFF NOTE Voice comm must be disabled during acquisition, by setting AUDIO: VHF A sw - OFF.	Activation of VHF ranging significantly reduces VHF voice capability. If unsatisfactory VHF voice communications are experienced and voice communication is required, VHF ranging should be disabled on CSM and LM.

CREW-MAN	PNL	PROCEDURES	REMARKS
		4.13.2.10 VHF Ranging Check (cont)	
		3. AUDIO: VHF B sw - RCV	
		4. At CSM request: COMM: VHF A XMTR sw - VOICE VHF B RCVR sw - OFF	
	8,12	5. AUDIO: VHF A sw - T/R	
		6. On completion of VHF Ranging Check, return to Communications Basic.	Refer para 4.13.2.1.
		4.13.2.11 DUA Enable	
		LGC Power-Up (required)	Ref para 4.6.1.1.
		1. Coordinate uplink requirements with MSFN	
CDR	11 12	2. CB COMM: UP DATA LINK - close UP DATA LINK sw - DATA	
		3. Clear inlink counter before initial MSFN uplink transmission Key V21 N01E, 00045E, 00000E	MSFN can also clear and reset inlink counter.
		4.13.2.12 DUA Disable	
		LGC Power-Up (required)	Ref para 4.6.1.1.
CDR	12	1. UP DATA LINK sw - OFF	
		2. Key RSET & CLR to reset any LGC-initiated alarms.	

SUBSYS MGMT

CREW-MAN	PNL	PROCEDURES	REMARKS
		4.13.2.13 DUA Backup Voice Enable	
CDR	11	1. CB COMM: UP DATA LINK - close	
LMP	12 14	2. UP DATA LINK sw - VOICE BU COMM: UPLINK SQUELCH sw - ENABLE	
CDR, LMP	8,12	3. AUDIO: MODE sw - ICS/PTT	Prevents retransmission of DUA backup voice to MSFN.
		4. AUDIO: ICS T/R sw - ICS T/R	
		5. Verify reception of MSFN voice.	
		4.13.2.14 DUA Backup Voice Disable	
LMP	12	1. UP DATA LINK sw - OFF	
CDR	11	2. CB COMM: UP DATA LINK - open	
		4.13.2.15 S-Band Antenna Cooldown	When antenna has operated "in stops" for 3 minutes or longer, it requires cooldown to allow electronics to reach safe operating temperature. Soakback period has been determined to be 10 minutes.
	12	1. COM ANT: TRACK MODE sw - OFF PITCH cont - 90° (ccw) YAW cont - 0° (ccw)	
		2. Following 10-minute shutdown: COM ANT: TRACK MODE se - SLEW	
		3. Perform S-Band Steerable Antenna Activation & Checkout	Ref para 4.2.20.
		4.13.2.16 S-Band Operation in PTC Mode	
LMP	14	1. COMM: UPLINK SQUELCH sw - OFF	
	12	2. When noise level increases: COMM ANT: S-BAND sel - FWD or AFT (as required)	

LM 3223

Communications Basic Configuration	Prior To Docking	Prep For Undocking	LOS Procedure	AOS Procedure	LM Relay With VHF Ranging	CSM Relay	Lunar Stay	PLSS/EVCS With TV (EVA)
Panel 11								
All COMM cb's - close								
Panel 8 - AUDIO (CDR)								
S BAND T/R sw - S BAND T/R						S BAND RCV		
ICS T/R sw - ICS T/R								
RELAY ON sw - RELAY OFF						RELAY ON		
MODE sw - ICS/PTT					VOX	VOX		VOX
AUDIO CONT sw - NORM								
VHF A sw - T/R					OFF		OFF	
VHF B sw - OFF	RCV	RCV	RCV		RCV		RCV	
VOX SENS sw - max								
Panel 16								
All COMM cb's - close								
CB COMM: TV - open								close
Panel 14 - COMM								
UPLINK SQUELCH sw - as desired	ENABLE	ENABLE	ENABLE		ENABLE	OFF	OFF*	ENABLE
Panel 12								
UPDATA LINK sw - OFF								
Panel 12 - AUDIO (LMP)								
S BAND T/R sw - S BAND T/R					S BAND RCV	OFF		
ICS T/R sw - ICS T/R								
RELAY ON sw - RELAY OFF					RELAY ON			RELAY ON
MODE sw - ICS/PTT					VOX	VOX		VOX
AUDIO CONT sw - NORM								
VHF A sw - T/R					OFF		OFF	
VHF B sw - OFF	RCV	RCV	RCV		RCV	RCV	RCV	RCV
VOX SENS - max								
Panel 12 - COMM								
S BAND MODULATE sw - FM								FM
S BAND XMTR/RCVR sw - SEC								
S BAND PWR AMPL sw - PRIM								
S BAND VOICE sw - VOICE			ON VOICE BU					
S BAND PCM sw - PCM								
S BAND RANGE sw - OFF/RESET		RANGE					as required	
VHF A XMTR sw - VOICE	VOICE/RNG				VOICE or VOICE/RNG		OFF	
VHF A RCVR sw - ON					OFF		OFF	
VHF B XMTR sw - OFF		DATA	DATA			OFF	OFF	
VHF B RCVR sw - OFF	ON	ON			ON	ON	ON	ON
VHF A SQUELCH sw - norm								NT + 1½
VHF B SQUELCH sw - norm								NT + 1½
TLM BIOMED sw - as required	RIGHT	RIGHT	OFF		OFF			OFF
TLM PCM sw - HI		LO	LO					
RECORDER sw - OFF								ON
Panel 12 - COMM ANT								
TRACK MODE sw - AUTO			OFF, then SLEW	SLEW, then AUTO			SLEW	OFF
PITCH cont - computed angle			90°					
YAW cont - computed angle			0°					
S BAND sel - SLEW			AFT or FWD	SLEW				as required
VHF sel - AFT or FWD								EVA

*During EVA - ENABLE

300LM10-1062

Table 4-2. Communications Modes

CREW-MAN	PNL	PROCEDURES	REMARKS
		4.13.3 PROPULSION	
		4.13.3.1 MPS Basic (Unstaged)	
CDR	11	1. CB/AC BUS B: He/PQGS PROPUL DISP - close CB PROPUL: DES He REG/VENT - close	
LMP	16	2. CB PROPUL: DISP/ENG OVRD LOGIC - close PQGS - close ASC He REG - close	
CDR	1	3. PRPLNT QTY MON sw - OFF HELIUM MON sel - SUPCRIT PRESS PRPLNT TEMP/PRESS MON sw - DES 1 DES He REG 1 tb - gray DES He REG 2 tb - bp ASC He REG 1 tb - gray ASC He REG 2 tb - gray	
CDR	8	4. DES PROPUL: FUEL VENT tb - gray OXID VENT tb - gray	
		4.13.3.2 MPS Basic (Staged)	
CDR	11	1. CB/AC BUS B: He/PQGS PROPUL DISP - close CB PROPUL: DES He REG/VENT - open	
LMP	16	2. CB PROPUL: DISP/ENG OVRD LOGIC - close PQGS - open ASC He REG - close	
CDR	1	3. PRPLNT QTY MON sw - OFF HELIUM MON sel - PRESS 2 PRPLNT TEMP/PRESS MON sw - ASC ASC He REG 1 tb - gray ASC He REG 2 tb - gray	ASC He REG latching valve is open when tb - gray ASC He REG latching valve is open when tb - gray

CREW-MAN	PNL	PROCEDURES	REMARKS
		4.13.3.3 APS/RCS Propellant Interconnect	Assumptions: (1) Ascent propulsion section is pressurized, (2) ascent propellants settled in tanks, and (3) +X-axis RCS thrusters are firing.
		WARNING Ullage settling requirements for APS propellant must be met before opening interconnect (thrusting maneuver or +g field). Interconnect must be closed before termination of thrusting maneuver to prevent helium injection into RCS causing RCS engine damage.	APS/RCS interconnect can be used for +X-axis translation maneuver using APS propellants, as long as required RCS ullage maneuver has been completed and +X-axis translation has not been interrupted.
CDR	TTC	1. Thrust for TBD seconds.	Time for propellant to settle is dependent upon vehicle configuration and weight.
LMP	2	2. RCS: SYS A ASC FEED 1 & 2 sw - ASC FEED 1 & 2 SYS A ASC FUEL & ASC OXID tb - gray SYS A MAIN SOV sw - CLOSE; tb - bp TEMP/PRESS MON sel - FUEL MANF A PRESS ind - 172 to 203 psia TEMP/PRESS MON sel - OXID MANF A PRESS ind - 172 to 203 psia	RCS: SYS A ASC FUEL and ASC OXID tb - gray indicates primary and secondary fuel and oxidizer ascent feed interconnect valves have opened.
		3. RCS: SYS B ASC FEED 1 & 2 sw - ASC FEED 1 & 2 SYS B ASC FUEL & ASC OXID tb - gray SYS B MAIN SOV sw - CLOSE tb - bp TEMP/PRESS MON sel - OXID MANF B PRESS ind - 172 to 203 psia TEMP/PRESS MON sel - FUEL MANF B PRESS ind - 172 to 203 psia	RCS: SYS B ASC FUEL and ASC OXID tb - gray indicate primary and secondary fuel and oxidizer ascent feed interconnect valves have opened.
		4. TBD seconds before termination of APS thrust:	Procedure for closing APS/RCS interconnect.
		RCS: SYS A & B MAIN SOV sw - OPEN; tb - gray SYS A & B ASC FEED 2 sw - CLOSE	Ascent feed valves can be opened after ascent engine has been shut down, provided +X-axis RCS thrusters are firing before reopening valves.
		SYS A & B ASC FUEL & ASC OXID tb - bp	RCS: SYS A and B ASC FUEL and ASC OXID tb - bp indicates primary or secondary fuel and oxidizer ascent feed valves are closed.

CREW-MAN	PNL	PROCEDURES	REMARKS
		4.13.3.3 APS/RCS Propellant Interconnect (cont) If tb - gray: SYS A or SYS B (depending on which tb - gray) ASC FEED 1 sw - CLOSE SYS A & B ASC FUEL & ASC OXID tb - bp SYS A or SYS B (depending on which tb - gray) ASC FEED 2 sw - OPEN SYS A & B ASC FUEL & ASC OXID tb - bp TEMP/PRESS MON sel - FUEL MANF A & B PRESS ind - 175 to 188 psia TEMP PRESS MON sel - OXID MANF A & B PRESS ind - 175 to 188 psia 5. RCS: TEMP/PRESS sel - He	
CDR		4.13.3.4 DPS Periodic Monitoring 1. HELIUM MON sel - SUPCRIT PRESS MPS: HELIUM ind - 500 to 1320 psia 2. MPS PRESS ind pwr fail lt - off 3. PRPLNT TEMP/PRESS MON sw - DES 1 MPS: FUEL TEMP ind - 50° to 90° F OXID TEMP ind - 50° to 90° F FUEL PRESS ind - 242 to 253 psia OXID PRESS ind - 242 to 253 psia 4. PRPLNT TEMP/PRESS MON sw - DES 2 MPS: FUEL TEMP ind - 50° to 90° F OXID TEMP ind - 50° to 90° F FUEL PRESS ind - 242 to 253 psia OXID PRESS ind - 242 to 253 psia 5. PRPLNT TEMP/PRESS MON sw - DES 1	This procedure checks status of propellants and helium before each burn and at intervals during coast periods. Range of supercritical helium pressures will be based upon information provided in figure 4-10. Light goes on when power to MPS: FUEL and OXID PRESS ind is interrupted. Following values apply to pressure relief valve assembly: Burst-disk rupture pressure - 260 to 275 psia Reseat pressure - 254 psia Relief valve cracking pressure - 260 psia

CREW-MAN	PNL	PROCEDURES	REMARKS
		4.13.3.5 APS Periodic Monitoring	This procedure checks status of propellants and helium before each burn and at intervals during coast periods. Helium pressure drops are expected during APS use. See figure 4-25 for APS helium tank pressures during burn.
CDR	1	1. HELIUM MON sel - PRESS 1 MPS: HELIUM ind - 2800 to 3500 psia (pre pressurization), 2700 to 3450 psia (post pressurization), & 600 to 800 psia (post lunar ascent)	Ascent helium tank pressure varies as function of time and is dependent on same as initial tank loading conditions. See figure 4-8 for expected helium tank pressure before pressurization. ASC PRESS warn lt-on when helium tank pressure <2773 psia; it is inhibited after staging.
		2. HELIUM MON sel - PRESS 2 MPS: HELIUM ind - 2800 to 3500 psia (pre pressurization), 2700 to 3450 psia (post pressurization), & 600 to 800 psia (post lunar ascent)	
		3. MPS: PRESS ind pwr fail lt - off	Light goes on when power to MPS: FUEL and OXID PRESS ind is interrupted.
		4. PRPLNT TEMP/PRESS MON sw - ASC MPS: FUEL TEMP ind - 50° to 90° F OXID TEMP ind - 50° to 90° F FUEL PRESS ind - 172 to 203 psia OXID PRESS ind - 172 to 203 psia	
		5. If unstaged: PRPLNT TEMP/PRESS MON sw - DES 1 HELIUM MON sel - SUPCRIT PRESS	

SUBS MGM

Deleted

Figure 4-24. Predicted APS Helium Tank Temperature During Burn

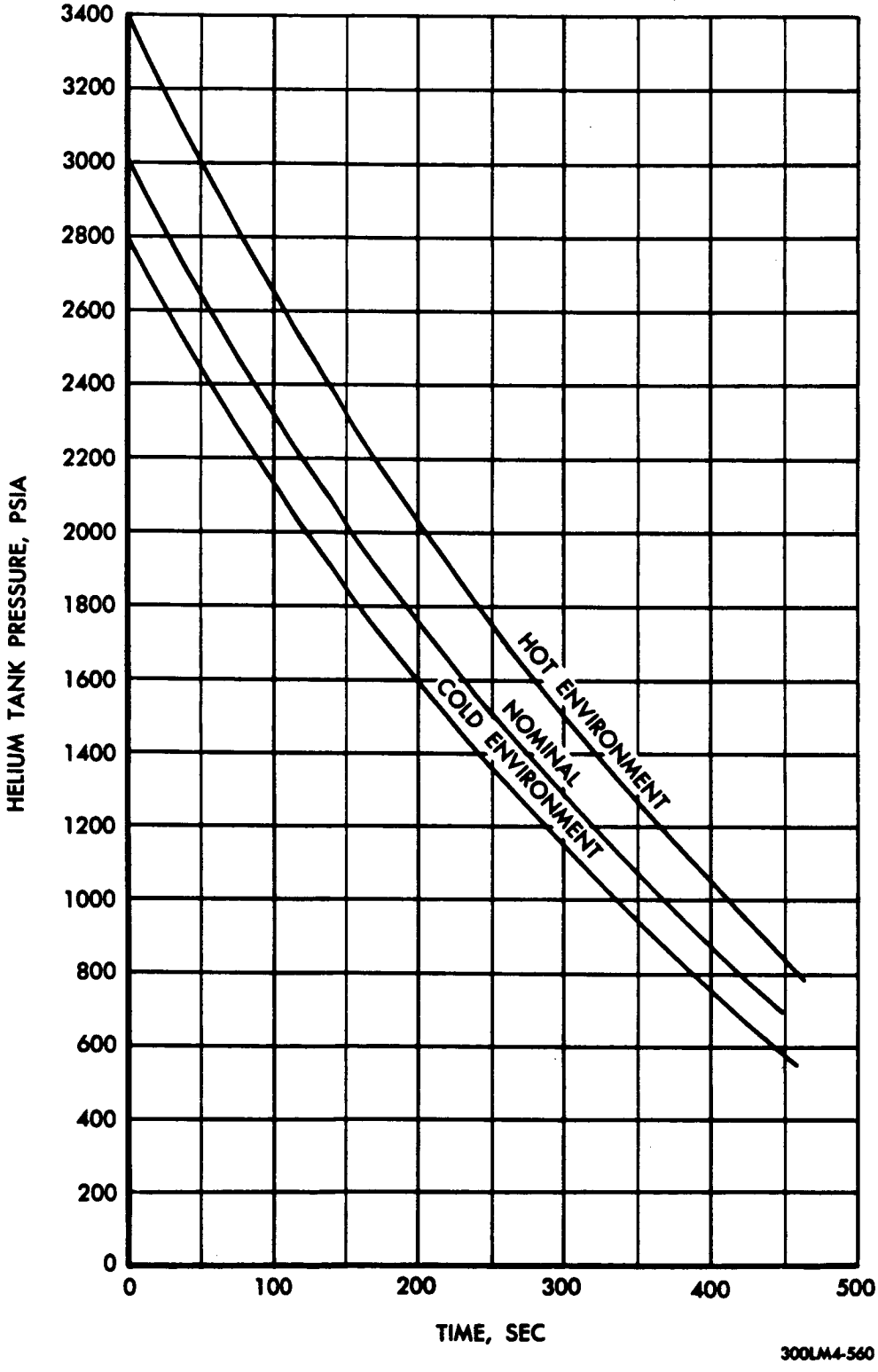

Figure 4-25. Predicted APS Helium Tank Pressure During Burn

CREW-MAN	PNL	PROCEDURES	REMARKS
		4.13.3.6 RCS Periodic Monitoring	Purpose of RCS Periodic Monitoring procedure is to check status of propellants, helium, and valve positions before each burn and at intervals during coast periods.
LMP	2	1. RCS: PRESS ind pwr fail lt - off QUANTITY ind pwr fail lt - off	During vehicle deactivation when CB RCS SYS B: TEMP/PRESS DISP FLAGS and CB RCS SYS B: PQGS/DISP - open, RCS: PRESS ind pwr fail lt and RCS: QUANTITY ind pwr fail lt - on.
		2. RCS: A & B QUANTITY ind - monitor & record percentage of usable propellant remaining:A_____% B_____%	Usable propellant remaining in either system is ≥ meter reading less 14%.
		3. RCS: TEMP/PRESS MON sel - He A & B PRESS ind - monitor & record:A_____psia B_____psia	
		4. RCS: TEMP/PRESS MON sel - PRPLNT A & B TEMP ind - 40° to 100° F A & B PRESS ind - 178 to 188 psia	
		5. RCS: TEMP/PRESS MON sel - FUEL MANF A & B PRESS ind - 175 to 188 psia	
		6. RCS: TEMP/PRESS MON sel - OXID MANF A & B PRESS ind - 175 to 188 psia	
		7. RCS: TEMP/PRESS MON sel - He (other than lunar stay) or FUEL (OXID) MANF (lunar stay only)	
		8. RCS: SYS A ASC FUEL tb - bp SYS A ASC OXID tb - bp SYS B ASC FUEL tb - bp SYS B ASC OXID tb - bp SYS A QUAD 1, 4, 2, 3, tb - gray SYS B QUAD 1, 4, 2, 3, tb - gray CRSFD tb - bp SYS A & B MAIN SOV tb - gray	

CREW-MAN	PNL	PROCEDURES	REMARKS
		4.13.3.6 RCS Periodic Monitoring (cont)	
	3	9. Verify RCS quad temperature readings: HTR CONT: TEMP MON sel - QUAD 1, 2, 3, 4 TEMP ind - 120° to 190° F (each quad) RCS SYS A/B 2 QUAD 1, 2, 3, 4 sw - AUTO	
		4.13.4 EPS	
		4.13.4.1 EPS Basic (Unstaged)	
CDR	11	1. All EPS cb's - close, except: CB EPS: INV 1 - open ASC ECA CONT - open	
LMP	16	2. All EPS cb's - close, except: CB EPS: ASC ECA CONT - open CROSS TIE BUS - open CROSS TIE BAL LOADS - open	Panel 16 CB EPS: CROSS TIE BAL LOADS will be closed during lunar stay, to provide load sharing.
	14	3. EPS: POWER/TEMP MON sel - CDR BUS INVERTER sw - 2 LMP BAT 1 & 2 tb - gray CDR BAT 3 & 4 tb - gray DES BATS tb - gray LUNAR BAT tb - bp BAT 5 NORMAL LMP FEED tb - bp BAT 5 BACK UP CDR FEED tb - bp BAT 6 NORMAL CDR FEED tb - bp BAT 6 BACK UP LMP FEED tb - bp	

SUBS MGM

CREW-MAN	PNL	PROCEDURES	REMARKS
		4.13.4.2 EPS Basic (Staged)	
CDR	11	1. All EPS cb's - close, except: CB EPS: CROSS TIE BUS - open DES ECA CONT - open DES ECA - open ASC ECA CONT - open	
LMP	16	2. All EPS cb's - close, except: CB EPS: DES ECA - open DES ECA CONT - open CROSS TIE BUS - open CROSS TIE BAL LOADS - open ASC ECA CONT - open	Panel 16 CB EPS: CROSS TIE BAL LOADS should only be closed if orbital contingency occurs.
	14	3. EPS: POWER/TEMP MON sel - CDR BUS INVERTER sw - 2 LMP BAT 1 & 2 tb - bp CDR BAT 3 & 4 tb - bp DES BATS tb - bp LUNAR BAT tb - bp BAT 5 NORMAL LMP FEED tb - gray BAT 5 BACK UP CDR FEED tb - bp BAT 6 NORMAL CDR FEED tb - gray BAT 6 BACK UP LMP FEED tb - bp	
		4.13.4.3 EPS Preparation for DPS Burn	
CDR	11	1. Perform EPS Basic (Unstaged), except: CB EPS: INV 1 - close	Ref para 4.13.4.1.
LMP	14	2. Check a-c voltage from inverter No. 1: EPS: POWER/TEMP MON sel - AC BUS INVERTER sw - 1 VOLTS ind - green band	Green band represents 112 to 118 vac.

CREW-MAN	PNL	PROCEDURES	REMARKS
		4.13.4.3 EPS Preparation for DPS Burn (cont) CAUTION Twenty minutes before start of DPS burn, ascent batteries must be placed on-line in parallel with descent batteries. CB EPS: CROSS TIE BAL LOADS (2) must remain closed until just before start of burn. 3. Place both ascent batteries on line: EPS: POWER/TEMP MON sel - BAT 5 VOLTS ind - 31, 5 to 37.2 vdc AMPS ind - 0 amps BAT 5 NORMAL LMP FEED sw - ON; tb - gray VOLTS ind - 28.0 to 32.5 vdc AMPS ind - TBD POWER/TEMP MON sel - BAT 6 VOLTS ind - 31.5 to 37.2 vdc AMPS ind - 0 amps BAT 6 NORMAL CDR FEED sw - ON; tb - gray VOLTS ind - 28.0 to 32.5 vdc AMPS ind - TBD	Due to reverse current, BATTERY caut lt may go on when ascent and descent batteries are paralleled. This is not to be regarded as malfunction symptom unless light is on longer than approximately 15 seconds.
LMP	14	4. Check voltage of all six batteries: EPS: POWER/TEMP MON sel - BAT 1 VOLTS ind - 28.0 to 32.5 vdc Repeat check for BAT 2, 3, 4, 5, & 6 5. Check d-c voltage on both buses: EPS: POWER/TEMP MON sel - LMP BUS VOLTS ind - 26.5 to 32.5 vdc 6. EPS: POWER/TEMP MON sel - CDR BUS	

SUBS MOM

CREW-MAN	PNL	PROCEDURES	REMARKS
		4.13.4.4 EPS Check, Post-DPS Burn	This task should be performed soon after any DPS burn during which ascent batteries were in parallel with descent batteries.
CDR	11	1. CB EPS: ASC ECA CONT - close	
LMP	16	2. CB EPS: ASC ECA CONT - close	
	14	3. Remove ascent batteries from line: EPS: BAT 5 NORMAL LMP FEED sw - OFF/RESET: tb - bp BAT 6 NORMAL CDR FEED sw - OFF/RESET; tb - bp	
		4. Check voltage & current of descent batteries: EPS: POWER/TEMP MON sel - BAT 1 VOLTS ind - 28.0 to 32.5 vdc AMPS ind - TBD Repeat for BAT 2, 3, & 4.	Verify load-sharing of descent batteries. To obtain proper current measurement for descent batteries, divide indicator reading by 2.
CDR	11	5. CB EPS: ASC ECA CONT - open	
LMP	16	6. CB EPS: ASC ECA CONT - open	
	14	7. Check a-c voltage from inverter No. 1: EPS: POWER/TEMP MON sel - AC BUS INVERTER sw - 1 VOLTS ind - green band INVERTER sw - 2 VOLTS ind - green band POWER/TEMP MON sel - CDR BUS	Green band represents 112 to 118 vac.
CDR	11	8. CB EPS: INV 1 - open	
		4.13.4.5 EPS Periodic Monitoring (Unstaged)	
		1. Verify EPS Basic (Unstaged).	Ref para 4.13.4.1.
	14	2. Check voltage on d-c buses: EPS: POWER/TEMP MON sel - CDR BUS VOLTS ind - 26.5 to 32.5 vdc Repeat for LMP BUS.	
	11	3. CB EPS: INV 1 - close	CB EPS: INV 1 is closed for checkout. Inverter No. 1 draws power while this circuit breaker is closed.

CREW-MAN	PNL	PROCEDURES	REMARKS
		4.13.4.5 EPS Periodic Monitoring (Unstaged) (cont)	
	14	4. Check voltage on a-c buses: EPS: POWER/TEMP MON sel - AC BUS INVERTER sw - 1 VOLTS ind - green band INVERTER sw - 2 VOLTS ind - green band	Green band represents 112 to 118 vac.
	11	5. CB EPS: INV 1 - open	Opening CB EPS: INV 1 prevents unnecessary power consumption.
	14	6. Check voltage & current of descent batteries: EPS: POWER/TEMP MON sel - BAT 1 VOLTS ind - 28.0 to 32.5 vdc. AMPS ind - TBD Repeat for BAT 2, 3, 4, & LUN battery.	To obtain proper current measurements for descent batteries, divide indicator readings by 2.
		7. Check open-circuit voltage & current of ascent batteries: EPS: POWER/TEMP MON sel - BAT 5 VOLTS ind - 31.5 to 37.2 vdc. AMPS ind - 0 amp Repeat for BAT 6.	
		8. Check open-circuit voltage of ED batteries: EPS: POWER/TEMP MON sel - ED/OFF ED VOLTS sw - BAT A VOLTS ind - 35.0 to 37.8 volts Repeat for BAT B.	Nominal open-circuit voltage for each ED battery is 37.1 vdc.
		9. EPS: POWER/TEMP MON sel - CDR BUS	

CREW-MAN	PNL	PROCEDURES	REMARKS
		4.13.4.6 EPS Periodic Monitoring (Staged)	
		1. Verify EPS Basic (Staged).	Ref para 4.13.4.2.
		2. Check voltage on d-c buses: EPS: POWER/TEMP MON sel - CDR BUS VOLTS ind - 26.5 to 32.5 vdc Repeat for LMP BUS.	
	11	3. CB EPS: INV 1 - close	
	14	4. Check voltage on a-c buses: EPS: POWER/TEMP MON sel - AC BUS INVERTER sw - 1 VOLTS ind - green band INVERTER sw - 2 VOLTS ind - green band	Green band represents 112 to 118 vac.
	14	5. Check voltage & current of ascent batteries: EPS: POWER/TEMP MON sel - BAT 5 VOLTS ind - 28.0 to 32.5 vdc AMPS ind - TBD Repeat for BAT 6.	
		6. EPS: POWER/TEMP MON sel - CDR BUS	
		4.13.4.7 LCA Duty Cycle During Secondary Coolant Loop Operation	This procedure must be performed to limit total maximum on time of LCA, with full load, to 45 minutes during extended periods (45 minutes or more) of secondary coolant loop operation.
CDR	5	1. LTG: OVERRIDE INTEGRAL sw - ON	Overhead floodlighting will be used to provide panel illumination.
	11	2. CB/AC BUS B: NUM LTG - open CAUTION CB/AC BUS B: NUM LTG must be closed during engine burns & rendezvous & docking maneuvers. It must be opened at completion of these periods.	
LMP	16	3. CB LTG: MASTER ALARM - close	

CREW-MAN	PNL	PROCEDURES	REMARKS
		4.13.4.7 LCA Duty Cycle During Secondary Coolant Loop Operation (cont)	
CDR	16 11	4. CB LTG: ANUN/DOCK/COMPNT - open CB LTG: ANUN/DOCK/COMPNT - open	
		CAUTION If subsystem failure occurs, MASTER ALARM will be activated. CB LTG: ANUN/DOCK/COMPNT (2) must be closed & necessary corrective action taken, then circuit breakers must be opened.	
		4.13.4.8 Lunar Stay Battery Management	
	16	1. Lunar battery on CDR bus with battery No. 4 CB EPS: CROSS TIE BAL LOADS - as required	Circuit breaker can be opened or closed, depending on charge condition of batteries No. 1 and 2.
	14	EPS: POWER/TEMP MON sel - LUN BAT VOLTS ind - 31.5 to 37.2 vdc AMPS ind - 0 amp CDR BAT 3 sw - OFF/RESET; tb - bp CDR LUNAR BAT sw - ON; tb - CDR POWER/TEMP MON sel - LMP BUS VOLTS ind - 26.5 to 32.5 vdc Repeat for CDR bus.	
	14	2. Lunar battery off CDR bus EPS: POWER/TEMP MON sel - BAT 3 VOLTS ind - 31.5 to 37.2 vdc AMPS ind - 0 amp CDR LUNAR BAT sw - OFF/RESET; tb - bp CDR BAT 3 sw - ON; tb - gray POWER/TEMP MON sel - LMP BUS VOLTS ind - 26.5 to 32.5 vdc Repeat for CDR bus.	
	16	CB EPS: CROSS TIE BAL LOADS - close	Perform this step if step 1 opened circuit breaker.
		3. Lunar battery on LMP bus with battery No. 1 CB EPS: CROSS TIE BAL LOADS - as required	Circuit breaker can be opened or closed, depending on charge condition of batteries No. 3 and 4.

CREW-MAN	PNL	PROCEDURES	REMARKS
		4.13.4.8 Lunar Stay Battery Management (cont)	
	14	EPS: POWER/TEMP MON sel - LUN BAT VOLTS ind - 31.5 to 37.2 vdc AMPS ind - 0 amp LMP BAT 2 sw - OFF/RESET; tb - bp LMP LUNAR BAT sw - ON; tb - LMP POWER/TEMP MON sel - LMP BUS VOLTS ind - 26.5 to 32.5 vdc Repeat for CDR bus.	
		4. Lunar battery off LMP bus	
	14	EPS: POWER/TEMP MON sel - BAT 2 VOLTS ind - 31.5 to 37.2 vdc AMPS ind - 0 amp LMP LUNAR BAT sw - OFF/RESET; tb - bp LMP BAT 2 sw - ON; tb - gray POWER/TEMP MON sel - LMP BUS VOLTS ind - 26.5 to 32.5 vdc Repeat for CDR bus.	
	16	CB EPS: CROSS TIE BAL LOADS - close	Perform this step if step 3 opened circuit breaker.
		5. Lunar battery on CDR bus alone CB EPS: CROSS TIE BAL LOADS - as required	Circuit breaker can be opened or closed, depending on charge condition of batteries No. 1 and 2.
	14	EPS: POWER/TEMP MON sel - LUN BAT VOLTS ind - 31.5 to 37.2 vdc AMPS ind - 0 amp CDR BAT 3 sw - OFF/RESET; tb - bp CDR LUNAR BAT sw - ON; tb - CDR CDR BAT 4 HI V sw - OFF/RESET; tb - bp POWER/TEMP MON sel - LMP BUS VOLTS ind - 26.5 to 32.5 vdc Repeat for CDR bus.	

CREW-MAN	PNL	PROCEDURES	REMARKS
		4.13.4.8 Lunar Stay Battery Management (cont)	
		6. Lunar battery off CDR bus	
	14	EPS:	
		POWER/TEMP MON sel - BAT 4	
		VOLTS ind - 31.5 to 37.2 vdc	
		AMPS ind - 0 amp	
		CDR BAT 4 HI V sw - ON; tb - gray	
		POWER/TEMP MON sel - BAT 3	
		VOLTS ind - 31.5 to 37.2 vdc	
		AMPS ind - 0 amp	
		CDR LUNAR BAT sw - OFF/RESET; tb - bp	
		CDR BAT 3 sw - ON; tb - gray	
		POWER/TEMP MON sel - LMP BUS	
		VOLTS ind - 26.5 to 32.5 vdc	
		Repeat for CDR bus.	
	16	CB EPS: CROSS TIE BAL LOADS - close	Perform this step if step 5 opened circuit breaker.
		7. Lunar battery on LMP bus alone	
		CB EPS: CROSS TIE BAL LOADS - as required	Circuit breaker can be open or closed, depending on charge condition of batteries No. 3 and 4.
	14	EPS:	
		POWER/TEMP MON sel - LUN BAT	
		VOLTS ind - 31.5 to 37.2 vdc	
		AMPS ind - 0 amp	
		LMP BAT 2 sw - OFF/RESET; tb - bp	
		LMP LUNAR BAT sw - ON; tb - LMP	
		LMP BAT 1 HI V sw - OFF/RESET; tb - bp	
		POWER/TEMP MON sel - LMP BUS	
		VOLTS ind - 26.5 to 32.5 vdc	
		Repeat for CDR bus.	
		8. Lunar battery off LMP bus	
	14	EPS:	
		POWER/TEMP MON sel - BAT 1	
		VOLTS ind - 31.5 to 37.2 vdc	
		AMPS ind - 0 amp	
		LMP BAT 1 HI V sw - ON; tb - gray	
		POWER/TEMP MON sel - BAT 2	
		VOLTS ind - 31.5 to 37.2 vdc	
		AMPS ind - 0 amp	

SUBSYS MGMT

CREW-MAN	PNL	PROCEDURES	REMARKS
		4.13.4.8 Lunar Stay Battery Management (cont)	
		LMP LUNAR BAT sw - OFF/RESET; tb - bp LMP BAT 2 sw - ON; tb - gray POWER/TEMP MON sel - LMP BUS VOLTS ind - 26.5 to 32.5 vdc Repeat for CDR bus.	
	16	CB EPS: CROSS TIE BAL LOADS - close	Perform this step if step 7 opened circuit breaker.
		4.13.5 HEATERS STATUS CHECK	This procedure is performed before LM/CSM separation and during LM manned coasting periods, to verify that all heater temperatures are within tolerance. Assumption: All heater circuit breakers are closed.
LMP	3	1. HTR CONT: TEMP MON sel - LDG RADAR TEMP ind - -19° to +148° F TEMP MON sel - RCS QUAD 1, 2, 3, & 4 TEMP ind - +119 to +190° F (each quad) TEMP MON sel - S BAND TEMP ind - -64° to +153° F TEMP MON sel - RNDZ RADAR TEMP ind - -54° to +148° F TEMP MON sel - LDG RADAR	
		4.13.6 SET EVENT TIMER	
LMP	3	1. EVNT TMR: RESET/COUNT sw - RESET RESET/COUNT sw - UP or DOWN SLEW CONT MIN sw - TENS SLEW CONT MIN sw - UNITS SLEW CONT SEC sw - TENS SLEW CONT SEC sw - UNITS TMR CONT sw - START	Flashing 9's can be seen as ghost background to normally displayed numbers if ambient lighting is very low and display brightness is at high level. Flashing-digit condition is normal and should not be regarded as malfunction indication.
		4.13.7 WASTE MANAGEMENT WARNING If germicide pouch is accidentially ruptured, proceed as follows:	

RC . . LM 3244

CREW-MAN	PNL	PROCEDURES	REMARKS
		4.13.7 WASTE MANAGEMENT (cont)	
		Germicide on LM surface or hardware - Wipe up with tissue.	
		Germicide on crewman's skin - Blot with tissue & flush with water.	
		Germicide in crewman's eyes - Flush with water from water gun & blot with tissue.	
		Germicide ingested - take high-protein food; do not induce vomiting.	
		4.13.7.1 Transfer Urine to D/S Waste Container (Prime Mode)	Assumptions: (1) Cabin is pressurized and (2) PGA is doffed.
	11 8	1. Five min before urine transfer: CB HTR: URINE LINE - close HTR CONT: URINE LINE sw - HTR 1	Prevents freezing of urine.
		2. Remove urine receptacle & transfer hose from stowage.	
		3. Remove protective cap and plug from urine receptacle, and safety cap from transfer hose.	Urine receptacle protective cap & plug prevents water, residual urine, and odor from entering the cabin
		4. Connect urine receptacle to transfer hose.	
		5. Urine receptacle vlv - open	Waste management tank nominal pressure is 2.5 psi.
		6. Accomplish task.	If urine does not flow: HTR CONT: URINE LINE sw - HTR 2 and wait 5 minutes
		7. Urine receptacle vlv - close	
		7A. Unstow water dispenser.	
		7B. Flush urine receptacle with water.	

SUBSYS MGMT

RC 1605, LM 3244

CREW-MAN	PNL	PROCEDURES	REMARKS
		4.13.7.1 Transfer Urine to D/S Waste Container (Prime Mode) (cont)	
		NOTE Do not insert water gun into urine receptacle.	
		7C. Rotate urine receptacle.	
		NOTE Blot excess water with paper towel.	
		7D. Urine receptacle vlv - open	
		7E. Shake urine receptacle	
		7F. Urine receptacle vlv - close	
		CAUTION To prevent loss of O2 from cabin after urine transfer, urine receptacle valve must be closed	
		7G. Stow water dispenser	
		8. Install protective cap and plug on urine receptacle.	Urine receptacle protective cap & plug prevents water, residual urine, and odor from entering the cabin
		9. Disconnect urine receptacle from transfer hose.	
		10. Install safety cap on transfer hose.	
		11. Stow equipment.	
	8 11	12. HTR CONT: URINE LINE sw - OFF CB HTR: URINE LINE - open	
		4.13.7.2 Transfer Urine to D/S Waste Container (Alternative Mode)	Assumption: PGA is donned.
		1. Five min before urine transfer:	Prevents freezing of urine.

RC 1605, LM 3244

CREW-MAN	PNL	PROCEDURES	REMARKS
		4.13.7.2 Transfer Urine to D/S Waste Container (Alternative Mode) (cont)	
	11 8	CB HTR: URINE LINE - close HTR CONT: URINE LINE sw - HTR 1	
		2. Remove transfer hose from stowage.	

SUBSY MGMT

CREW-MAN	PNL	PROCEDURES	REMARKS
		4.13.7.2 Transfer Urine to D/S Waste Container (Alternative Mode) (cont)	
		3. Remove safety plug from transfer hose.	
		4. Remove cover from PGA urine transfer connector.	
		5. Connect transfer hose to PGA urine transfer connector.	
		6. Monitor flow through urine sight glass.	Waste management tank nominal pressure is 2.5 psi. If urine does not flow: HTR CONT: URINE LINE sw - HTR 2 and wait 5 minutes.
		7. After flow has stopped, disconnect transfer hose from PGA urine transfer connector.	
		8. Install safety plug into transfer hose.	
		9. Install cover on PGA urine transfer connector.	
		10. Stow transfer hose.	
	8 11	11. HTR CONT: URINE LINE sw - OFF CB HTR: URINE LINE - open	
		4.13.7.3 Transfer Urine to Small Urine Collection Assembly	This is backup procedure for use if waste management system fails. Assumption: Both crewmen are wearing helmets and gloves.
		CAUTION Urine should not be transferred until at least 40 min after water sublimator startup.	
		1. Remove small urine collection assembly from stowage.	Alternative method of transferring urine from PGA is to manually squeeze fluid from UCTA. If this method is used, omit steps 3 through 6.
		2. Expose PGA urine transfer connector & attach collection assembly to PGA.	

SUBS MGM

CREW-MAN	PNL	PROCEDURES	REMARKS
		4.13.7.3 Transfer Urine to Small Urine Collection Assembly (cont)	
	ECS	3. SUIT GAS DIVERTER vlv - PULL EGRESS	Sequence in steps 3 and 6 should be performed as given. If sequence is changed, suit fan may stall and water separator may slow down, causing: MASTER ALARM - on ECS caut lt - on SUIT FAN comp caut lt - on H20 SEP comp caut lt - on
		CABIN GAS RETURN vlv - EGRESS SUIT CIRCUIT RELIEF vlv - CLOSE PRESS REG A vlv - DIRECE 02	PRESS REG B vlv can be used in lieu of PRESS REG A vlv.
	2	4. ECS: SUIT PRESS ind - 0.5 to 0.75 psia > CABIN PRESS ind	
	ECS	5. PRESS REG A vlv - CABIN	
		6. When urine transfer is completed: SUIT CIRCUIT RELIEF vlv - AUTO CABIN GAS RETURN vlv - AUTO SUIT GAS DIVERTER vlv - PUSH CABIN	
		7. Remove small urine collection assembly from PGA & install cap on PGA connector.	
		8. Stow small urine collection assembly.	
		4.13.7.4 Emesis Disposal	Assumptions: (1) Cabin is pressurized and (2) Steps 3, 4, 5, 7, and 8 must be performed if PGA is donned.
		1. Remove fecal/emesis (F/E) bag from stowage.	
		2. Open germicide pouch & insert into inner F/E bag.	
	16 ECS	3. CB ECS: CABIN REPRESS - close CABIN REPRESS vlv - AUTO PRESS REG A vlv - CABIN PRESS REG B vlv - CABIN	Unstaged vehicle only.
		4. Doff helmet & gloves.	
		5. SUIT ISOL vlv - SUIT DISC	

CREW-MAN	PNL	PROCEDURES	REMARKS
		4.13.7.4 Emesis Disposal (cont)	
		6. Perform task	
	ECS	7. SUIT ISOL vlv - SUIT FLOW	
		8. Don helmet & gloves.	
		9. Seal inner F/E bag.	
		10. Insert inner F/E bag into outer F/E bag & seal.	
		11. Stow outer F/E bag.	
		4.13.7.5 Deleted	
		4.13.7.6 Defecation Disposal	Assumptions: (1) Cabin is pressurized & (2) PGA is doffed.
		1. Remove defecation device from stowage.	
		2. Insert inner bag into unit.	
		3. Open germicide pouch & insert into inner F/E bag.	Germicide pouch is inserted before performing task for defecation.
		4. Perform task.	
		5. Seal inner bag.	
		6. Place inner bag into outer F/E bag & seal outer bag.	
		7. Knead contents.	
		8. Stow bag.	
		4.13.8 INSTALLATION OF 16-MM SEQUENCE CAMERA WEDGE	
		1. Remove 16-mm camera from window mount.	
		2. Remove wedge from 16-mm camera bag in RHSSC; stow bag in midsection.	
		3. Install wedge on window mount.	
		4. Reinstall camera.	

CREW-MAN	PNL	PROCEDURES	REMARKS
		4.13.9 WINDOW SHADES (CDR, LMP, & DOCKING)	Shades must be deployed during unmanned phases of mission. During manned periods, shade position is at discretion of crew.
		4.13.9.1 Deploy Shades	
		1. Pull shade from container & unroll (window covered).	
		2. Tack Velcro.	
		4.13.9.2 Stow Shades	
		1. Untack Velcro.	
		2. Guide shade to stowed position (window uncovered).	
		4.13.10 CRASH BAR DEPLOYMENT	
		4.13.10.1 Unstow Crash Bar	Procedure to be used before all engine burns and all lunar-surface cabin activity.
		1. Release crash bar from stowage bracket & swivel out & up across window.	
		2. Lock bar into upper bracket.	
		4.13.10.2. Stow Crash Bar	
		1. Remove crash bar from upper bracket & swivel out & down.	
		2. Lock bar into stowage bracket.	

SUBSY MGM

PARA	TITLE	PAGE
4.14	Intravehicular Operations	4.14-2
4.14.1	Initial Intravehicular Transfer to LM	4.14-2
4.14.2	Intravehicular Transfer to LM (Second Crewman)	4.14-3
4.14.3	Prepare for LM-to-CSM Transfer	4.14-3
4.14.4	Intravehicular Transfer to CSM	4.14-5
4.14.5	Enable LM Cabin Repressurization System	4.14-5
4.14.6	Disable LM Cabin Repressurization System	4.14-6
4.14.7	Connect to LM ECS & Communications	4.14-6
4.14.8	Disconnect From LM ECS & Communications	4.14-8
4.14.9	Open Overhead Hatch (LM Side)	4.14-9
4.14.10	Open Overhead Hatch (CSM Side)	4.14-9
4.14.11	Close Overhead Hatch (LM Side)	4.14-10
4.14.12	Close Overhead Hatch (CSM Side)	4.14-10
4.14.13	Install Drogue (LM Side)	4.14-10
4.14.14	Install Drogue (CSM Side)	4.14-11
4.14.15	Remove Drogue (LM Side)	4.14-11
4.14.16	Remove Drogue (CSM Side)	4.14-12
4.14.17	Tunnel Pressure Equalization From LM	4.14-12
4.14.18	Tunnel Pressurization From LM, Without Using LM Consumables	4.14-12
4.14.19	Tunnel Pressurization From LM, Using LM Consumables	4.14-13
4.14.20	Vacuum Brush Operation	4.14-14

LM 3231

CREW-MAN	PNL	PROCEDURES	REMARKS
		4.14 INTRAVEHICULAR OPERATIONS	
		4.14.1 INITIAL INTRAVEHICULAR TRANSFER TO LM	Assumptions: (1) Docking tunnel is clear; (2) CSM, LM, and docking tunnel are pressurized; and (3) transfer umbilical is connected to PGA. Only one crewman at a time can transfer, because there is only one transfer umbilical.
		1. Perform Open Overhead Hatch (CSM Side) procedure.	Ref para 4.14.10.
		2. Verify that LM cabin overhead floodlights are on with hatch open.	
		3. Read relative roll indication on docking ring & transmit reading to CSM.	
		4. Enter LM cabin, head first & facing forward.	
		5. Maneuver into cabin above ascent engine cover, grasp assist bar forward of hatch fitting in LM ceiling, pull self into cabin & walk backward down open hatch, ascent engine cover, & midsection bulkhead until feet are on cabin floor. Stow window shades (3) as required.	
		6. DES H2O vlv - OPEN	
		7. Unstow water dispenser to check that there is no water leakage, then stow.	
		8. Overhead floodlights - adjust for forward illumination	
		9. Remove utility lights from interim stowage assembly & place in operational locations.	
		10. Remove interim stowage assembly from front panel & place over PLSS in recharge station.	
		11. Unstow checklist & DEDA desk; place checklist on desk.	

CREW-MAN	PNL	PROCEDURES	REMARKS
		4.14.1 INITIAL INTRAVEHICULAR TRANSFER TO LM (cont)	
		CAUTION Do not exceed 14.4-amp power limitation through CSM/LM electrical umbilicals.	
	3	12. LTG: FLOOD sw - ALL EXTERIOR LTG sw - OFF	
		13. Unstow mirror & mount on panel 4.	Mirror is used to assist in securing restraints to PGA.
		14. Attach inboard restraint cables to PGA.	Use restraints, as required during flight.
		15. Move mirror to panel 16.	Mirror mounts on panels 4, 11, and 16 are to be used as required during flight.
		4.14.2 INTRAVEHICULAR TRANSFER TO LM (SECOND CREWMAN)	
		1. Enter LM cabin, head first & facing forward.	
		2. Maneuver into cabin above ascent engine cover, grasp assist bar forward of hatch fitting in LM ceiling, pull self into cabin & walk backward down open hatch, ascent engine cover, & midsection bulkhead until feet are on cabin floor.	
		3. Stand in flight station, face forward, & attach restraints.	
		4.14.3 PREPARE FOR LM-TO-CSM TRANSFER	Assumptions: (1) Equipment transfer to CSM, if required, must be accomplished before connection to transfer umbilical, and (2) PGA is donned.
CDR		1. Verify that CSM has pressurized docking tunnel.	If vacuum transfer is required, omit steps 1 and 2.
		2. Cabin relief & dump vlv (ovhd) - OPEN	
		3. Overhead hatch - UNLOCK, open, & secure to ascent engine cover	
		4. Verify that tunnel is clear.	If probe and drogue are in tunnel, crew must remove and stow. CSM crewman may connect CSM/LM electrical umbilical during this time. LM crewman may reach transfer umbilical stowage himself.

CREW-MAN	PNL	PROCEDURES	REMARKS
		4.14.3 PREPARE FOR LM-TO-CSM TRANSFER (cont)	
		5. Receive transfer umbilical from CSM.	
		6. Verify that O2 is not flowing in transfer umbilical.	
		7. Remove plugs from PGA O2 connectors & stow.	
		8. Connect transfer umbilical O2 hoses to PGA, inlet to inlet (blue to blue), outlet to outlet (red to red).	
		9. Request CSM to verify no transfer umbilical suit power.	
LMP CDR	12	10. COMM: TLM BIOMED sw - OFF or LEFT or COMM: TLM BIOMED sw - OFF or RIGHT	Steps 10 and 11 are performed to ensure that crewman communications cable is not powered.
	16	11. CB COMM: SE AUDIO - open or CB COMM: CDR AUDIO - open	Step 11 results in loss of communications.
		12. Disconnect LM comm cable from PGA & connect transfer umbilical comm cable to PGA.	
		13. Signal CSM to apply transfer umbilical suit power.	
		14. Request CSM to start O2 flow through transfer umbilical.	This constitutes communications check via transfer umbilical communications cable.
LMP CDR	ECS	15. SUIT ISOL vlv (LMP) - SUIT DISC or SUIT ISOL vlv (CDR) - SUIT DISC	
		16. Verify O2 flow to PGA through transfer umbilical.	
		17. Disconnect LM umbilical O2 hoses from PGA.	
		18. Remove plugs from stowage & place in PGA.	
		19. Stow LM umbilical.	

LM 3231

CREW-MAN	PNL	PROCEDURES	REMARKS
		4.14.4 INTRAVEHICULAR TRANSFER TO CSM	
LMP		1. Unstow & install interim stowage assembly over panels 1 & 2.	
		2. Overhead floodlights - rotate aft Deploy window shades (3) if previously stowed.	
	ECS	3. DES H2O vlv - CLOSE	
		4. Release hatch from ascent engine cover.	
		5. Cabin relief & dump vlv (ovhd) - AUTO	
		6. Perform Close Overhead Hatch (CSM Side) procedure.	Ref para 4.14.12.
		4.14.5 ENABLE LM CABIN REPRESSURIZATION SYSTEM	Assumptions: (1) Initial Intravehicular Transfer to LM (para 4.14.1) has been performed and (2) LM PRESS REG A and B vlv - CLOSE.
		NOTE This procedure enables LM ECS to operate in conjunction with CM ECS in event of cabin puncture (loss of cabin pressure) while vehicles are docked, pressurized, & tunnel hatches are open.	
	ECS	1. DES O2 vlv - OPEN	
		CAUTION Rapid switching of CABIN REPRESS vlv from AUTO to CLOSE, or CLOSE to AUTO, causes loud bang. This does not damage valve. To change CABIN REPRESS vlv position, smooth, slow movement is recommended.	
		2. CABIN REPRESS vlv - AUTO	
	16	3. CB ECS: CABIN REPRESS - close	

CREW-MAN	PNL	PROCEDURES	REMARKS
		4.14.6 DISABLE LM CABIN REPRESSURIZATION SYSTEM	Procedure to be performed by last crewman leaving LM.
	ECS	1. DES O2 vlv - CLOSE	
		CAUTION Rapid switching of CABIN REPRESS vlv from AUTO to CLOSE, or CLOSE to AUTO, causes loud bang. This does not damage valve. To change CABIN REPRESS vlv position, smooth, slow movement is recommended.	
		2. CABIN REPRESS vlv - CLOSE	
	16	3. CB ECS: CABIN REPRESS - open	
		4.14.7 CONNECT TO LM ECS & COMMUNICATIONS	Assumptions: (1) LM ECS and communications are configured to support crewman, (2) procedure to be used at any time other than initial entry, and (3) procedure is used for pressurized or depressurized cabin.
		CAUTION CB COMM: SE AUDIO must be closed to transmit on VHF A and/or operate DSEA. CB must be opened when LMP connects or disconnects LM comm cable & COMM: TLM BIOMED sw - OFF or LEFT. CB COMM: CDR AUDIO must be closed to transmit voice on VHF B. CB must be opened when CDR connects or disconnects LM comm cable & COMM: TLM BIOMED sw - OFF or RIGHT.	
		1. Unstow LM umbilical.	
		2. Verify that PGA O2 connectors clear.	
		3. Connect O2 hoses to PGA O2 connectors, inlet to inlet (blue to blue), outlet to outlet (red to red).	
LMP CDR	ECS	4. SUIT ISOL vlv (LMP) - SUIT FLOW or SUIT ISOL vlv (CDR) - SUIT FLOW	

CREW-MAN	PNL	PROCEDURES	REMARKS
		4.14.7 CONNECT TO LM ECS & COMMUNICATIONS (cont)	
		5. Terminate flow from PLSS or CSM.	
		6. Verify O2 flow to PGA from LM ARS.	
LMP CDR	12	7. Verify: COMM: TLM BIOMED sw - OFF or LEFT or COMM: TLM BIOMED sw - OFF or RIGHT	
LMP CDR	16 11	8. Verify: CB COMM: SE AUDIO - open or CB COMM: CDR AUDIO - open	
	RCU	9. EVC-1 (EVC-2) MODE SEL sw - O or Request CSM to remove comm cable power & verify noise level change in headset.	Removes communications power from PLSS cable. Removes communications power from transfer umbilical.
		10. Disconnect PLSS or CSM comm cable from PGA.	
LMP	16	11. Connect LM comm cable to PGA.	
CDR	11	12. CB COMM: SE AUDIO - close or CB COMM: CDR AUDIO - close	
CDR/ LMP		13. Disconnect PLSS or CSM O2 hoses.	
		14. Unstow LCG H20 umbilical.	
		15. Verify that PGA multiple water connection is clear.	
		CAUTION Do not connect LM LCG H20 umbilical to PGA if LCG accumulator bob was found to be bottomed during Initial Entry status check.	
		16. Connect LCG H20 umbilical to PGA connector.	
	16	17. CB ECS: LCG PUMP - close (as required)	

CREW-MAN	PNL	PROCEDURES	REMARKS
		4.14.8 DISCONNECT FROM LM ECS & COMMUNICATIONS	Assumptions: (1) Each crewman is in position to observe and assist other crewman and (2) procedure is used for pressurized or depressurized cabin.
		CAUTION CB COMM: SE AUDIO must be closed to transmit on VHF A and/or operate DSEA. CB must be opened when LMP connects or disconnects LM comm cable & COMM: TLM BIOMED sw - OFF or LEFT. CB COMM: CDR AUDIO must be closed to transmit voice on VHF B. CB must be opened when CDR connects or disconnects LM comm cable & COMM: TLM BIOMED sw - OFF or RIGHT.	
		1. Verify that PGA O2 connectors clear.	
		2. Connect PLSS (or CSM) O2 hoses to PGA O2 connectors, inlet to inlet (blue to blue), outlet to outlet (red to red).	
		3. Initiate flow from PLSS (or CSM)	
LMP	ECS	4. SUIT ISOL vlv (LMP) - SUIT DISC; verify flow from PLSS (or CSM) or SUIT ISOL vlv (CDR) - SUIT DISC; verify flow from PLSS (or CSM)	
		5. Disconnect LM O2 hoses from PGA.	
	RCU	6. EVC-1 (EVC-2) MODE SEL sw - 0 or Request CSM to remove comm cable power & verify noise level change in headset.	Removes communications power from PLSS cable. Removes communications power from transfer umbilical.
LMP CDR	12	7. COMM: TLM BIOMED sw - OFF or LEFT or COMM: TLM BIOMED sw - OFF or RIGHT	
LMP CDR	16 11	8. CB COMM: SE AUDIO - open or CB COMM: CDR AUDIO - open	

CREW-MAN	PNL	PROCEDURES	REMARKS
		4.14.8 DISCONNECT FROM LM ECS & COMMUNICATIONS (cont)	
		9. Disconnect comm cable from PGA.	
		10. Connect PLSS (or CSM) comm cable to PGA.	
		11. Stow LM umbilical.	
LMP/ CDR	16	12. CB ECS: LCG PUMP - open	To be performed before last crewman disconnects from LCG H2O umbilicals.
		13. Disconnect LCG H2O umbilical from PGA	
		14. Stow LCG H2O umbilical.	
		15. Unstow & replace PGA/LCG plug.	
		4.14.9 OPEN OVERHEAD HATCH (LM SIDE)	Assumptions: (1) CSM has pressurized docking tunnel and (2) Tunnel Pressure Equalization From LM procedure (para 4.14.17) has been performed.
		1. Grasp hatch handle & push.	
		2. Rotate handle counterclockwise to UNLOCK & pull hatch open.	
		3. Cabin relief & dump vlv (ovhd) - AUTO	
		4. Guide hatch to ascent engine cover.	
		5. Latch hatch flange to ascent-engine-cover fitting to secure hatch open.	
		4.14.10 OPEN OVERHEAD HATCH (CSM SIDE)	CSM must verify docking-tunnel and LM-cabin pressure equalization.
		1. Cabin relief & dump vlv (ovhd) - PULL TO DUMP	External handle of cabin relief and dump vlv (ovhd) is spring loaded to allow return to automatic, when released.
		2. Grasp hatch handle & pull.	
		3. Rotate handle clockwise to UNLOCK.	
		4. Open hatch & guide inward to LM ascent engine cover.	
		5. Push hatch so that hatch flange latches to ascent-engine-cover fitting.	

INTRA VEHICULAR OPERATION

CREW-MAN	PNL	PROCEDURES	REMARKS
		4.14.11 CLOSE OVERHEAD HATCH (LM SIDE)	
		1. Unlatch hatch flange from ascent-engine-cover fitting.	
		2. Guide hatch to closed position.	
		3. Grasp handle & push.	
		4. Rotate handle clockwise to LOCK.	
		5. Verify that handle pops out of detent, then release.	
		6. Cabin relief & dump vlv (ovhd) - AUTO	
		4.14.12 CLOSE OVERHEAD HATCH (CSM SIDE)	
		1. Unlatch hatch flange from ascent-engine-cover fitting.	
		2. Cabin relief & dump vlv (ovhd) - AUTO	
		3. Enter LM/CSM tunnel, feet first.	
		4. Grasp hatch handle & guide hatch to closed position.	
		5. Pull handle & rotate counterclockwise to LOCK.	
		6. Verify that handle pops out of detent, then release.	
		4.14.13 INSTALL DROGUE (LM SIDE)	
		1. Verify that drogue support-locking fitting is in unlocked position.	Lever parallel to LM Y-Z plane and rotated clockwise against tunnel wall.
		2. Request CMP to pass drogue through tunnel.	
		3. Receive drogue & grasp by handles.	
		4. Align drogue lugs with LM drogue support-fitting ramps.	
		5. Push drogue toward CSM until drogue lugs engage support fitting.	
		6. Rotate drogue clockwise through full travel.	Full travel is approximately 5°.

CREW-MAN	PNL	PROCEDURES	REMARKS
		4.14.13 INSTALL DROGUE (LM SIDE) (cont)	
		7. Lock drogue in place by rotating lever counterclockwise, perpendicular to tunnel wall, then rotating lever parallel to LM X-axis.	
		4.14.14 INSTALL DROGUE (CSM SIDE)	
		1. Verify that drogue support-locking fitting is in unlocked position.	Lever out of detent and rotated counterclockwise against tunnel wall.
		2. Retrieve drogue from stowage	
		3. Insert drogue into tunnel past drogue support fittings, using drogue handles to control movement through tunnel.	
		4. Rotate drogue 180° & grasp drogue forward edge with both hands.	
		5. Align drogue lugs with LM drogue support-fitting ramps.	
		6. Pull drogue toward CSM until lugs engage support fittings.	
		7. Rotate drogue counterclockwise through full travel.	Full travel is approximately 5°.
		8. Lock drogue in place by rotating lever clockwise perpendicular to tunnel wall & push into detent.	
		4.14.15 REMOVE DROGUE (LM SIDE)	
		1. Unlock drogue by rotating lever upward & parallel to LM Y-Z plane; rotate clockwise against tunnel wall.	
		2. Grasp drogue handles & rotate drogue counterclockwise through full travel.	Full travel is approximately 5°.
		3. Pull drogue until lugs disengage from support fittings.	
		4. Rotate drogue so that CMP can grasp drogue handles & pull drogue into CSM.	Assumption: CMP is in position to assist LM crewman.

INTRA VEHICUL OPERATIO

CREW-MAN	PNL	PROCEDURES	REMARKS
		4.14.16 REMOVE DROGUE (CSM SIDE)	
		1. Pull drogue locking lever out of detent & rotate counter-clockwise to tunnel wall.	
		2. Grasp drogue forward edge with both hands & rotate clockwise through full travel.	Full travel is approximately 5°.
		3. Push drogue toward LM until lugs have disengaged from drogue support fittings.	
		4. Rotate drogue 180° & grasp both drogue handles.	
		5. Guide drogue through tunnel into CSM.	
		4.14.17 TUNNEL PRESSURE EQUALIZATION FROM LM	
	ECS	1. PRESS REG A vlv - EGRESS PRESS REG B vlv - EGRESS	Prevents LM from supplying oxygen to both LM and CSM while interconnecting tunnel is open.
		2. SUIT GAS DIVERTER vlv - PULL EGRESS	
		3. Cabin relief & dump vlv (ovhd) - OPEN	
		4.14.18 TUNNEL PRESSURIZATION FROM LM, WITHOUT USING LM CONSUMABLES	This is backup procedure. Pressurization of tunnel is normally CSM task. Assumption: ECS Basic (Unstaged).
	ECS	1. PRESS REG A vlv - EGRESS PRESS REG B vlv - EGRESS	Prevents LM from supplying oxygen to both LM and CSM while interconnecting tunnel is open.
		2. SUIT GAS DIVERTER vlv - PULL EGRESS	
		3. Cabin relief & dump vlv (ovhd) - OPEN	
	2	4. ECS: CABIN PRESS ind - approx 4.6 psia	Cabin pressure will decrease approximately 0.2 psia, based on following: (1) LM free volume - 235 cu ft, (2) combined docking tunnel volume - 11.5 cu ft, and (3) initial LM pressure - 4.8 psia.

CREW-MAN	PNL	PROCEDURES	REMARKS
		4.14.18 TUNNEL PRESSURIZATION FROM LM WITHOUT USING LM CONSUMABLES (cont)	CSM must equalize pressure with tunnel at 4.6 psia. Final pressure decay will be function of how long LM maintains tunnel pressure. Initial tunnel leakage (during initial seal latching) is 0.25 lb/hr at 5 psia. After completion of final seal latching, leakage is 0.1 lb/hr at 5 psia.
		4.14.19 TUNNEL PRESSURIZATION FROM LM, USING LM CONSUMABLES	This is backup procedure. Pressurization of tunnel is normally CSM task. Assumptions: (1) ECS Basic (Staged), (2) ascent oxygen tanks No. 1 and 2 have sufficient usable oxygen remaining and (3) this is last pressurization before crew transfer and LM jettison.
LMP	ECS	1. PRESS REG A vlv - EGRESS PRESS REG B vlv - EGRESS	
	ECS	2. SUIT GAS DIVERTER vlv - PULL EGRESS CABIN GAS RETURN vlv - AUTO	
		3. Cabin relief & dump vlv (ovhd) - OPEN	
	2	4. ECS: CABIN PRESS ind - approx 4.4 psia	Cabin pressure will decrease approximately 0.2 psia, based on following: (1) LM free volume - 235 cu ft, (2) combined docking tunnel volume - 11.5 cu ft, and (3) initial LM pressure - 4.8 psia.
		CAUTION Rapid switching of CABIN REPRESS vlv from AUTO to CLOSE, or CLOSE to AUTO, causes loud bang. This does not damage valve. To change CABIN REPRESS vlv position, smooth, slow movement is recommended.	
	ECS	5. CABIN REPRESS vlv - MANUAL until ECS: CABIN PRESS ind - 5.0 psia, then - CLOSE	

INTRA VEHICULA OPERATION

CREW-MAN	PNL	PROCEDURES	REMARKS
		4.14.20 VACUUM BRUSH OPERATION	Assumptions: (1) LM ascent stage docked with CSM after lunar launch, (2) LM/CSM docking hatches are open and tunnel is clear, and (3) crew have doffed helmets and gloves.
CDR		1. Receive vacuum brush equipment from CSM.	
LMP	ECS	2. SUIT GAS DIVERTER vlv - PULL EGRESS CABIN GAS RETURN vlv - EGRESS SUIT CIRCUIT RELIEF vlv - CLOSE	
CDR, LMP		3. Disconnect red 02 hose from PGA.	
LMP		4. Connect red hose to 02 umbilical interconnect.	
CDR		5. Connect red hose to vacuum.	
CDR/ LMP		6. Vacuum equipment as necessary.	
CDR		7. Disconnect vacuum from hose and stow.	
LMP		8. Disconnect hose from 02 umbilical interconnect.	
CDR, LMP		9. Connect red 02 hose to PGA.	
LMP		10. SUIT CIRCUIT RELIEF vlv - AUTO	

PARA	TITLE	PAGE
4.15	Lunar Stay Operations	4.15-2
4.15.1	Cabin Operations	4.15-2
4.15.1.1	EPS Check, Post-Lunar-Landing	4.15-2
4.15.1.2	Lunar Stay Subsystems Check	4.15-3
4.15.1.3	Open Forward Hatch (Cabin Side)	4.15-13
4.15.1.4	Open Forward Hatch (Outside)	4.15-13
4.15.1.5	Close Forward Hatch (Cabin Side)	4.15-13
4.15.1.6	Close Forward Hatch (Outside)	4.15-14
4.15.1.7	ARS Purge (EVA Preparation)	4.15-14
4.15.1.8	Subsystem Configuration for EVA Preparation	4.15-15
4.15.1.9	PLSS/EVCS Electrical Checkout, Two-Man EVA	4.15-17
4.15.1.10	PLSS/EVCS Electrical Checkout, One-Man EVA	4.15-20
4.15.1.11	Final Subsystems Configuration for Egress	4.15-23
4.15.1.12	ECS Status (Two Men on Lunar Surface)	4.15-24
4.15.1.13	Post-EVA Final Subsystems Configuration	4.15-26A
4.15.1.14	Cooling H20 Changeover, PLSS H20 to LM H20 (LCG)	4.15-28
4.15.1.15	Cooling H20 Changeover, LM H20 (LCG) to PLSS H20	4.15-28
4.15.1.16	PLSS Recharge	4.15-28
4.15.1.16.1	Oxygen Recharge	4.15-28
4.15.1.16.2	Feedwater Reservoir and Auxiliary Tank Recharge, Gravity Environment	4.15-29
4.15.1.17	Raise EVA Antenna	4.15-32
4.15.1.18	Stow EVA Antenna	4.15-32
4.15.1.19	Sleep Station	4.15-32
4.15.1.19.1	Deploy Sleep Station	4.15-32
4.15.1.19.2	Stow Sleep Station	4.15-33
4.15.1.20	Buddy Umbilical Stowage Bag Removal	4.15-34
4.15.1.21	PGA Protective Stowage	4.15-34
4.15.2	Extravehicular Activity	4.15-34
4.15.2.1	MESA Operations	4.15-34
4.15.2.1.1	MESA Remote Deployment	4.15-34
4.15.2.1.2	MESA Manual Deployment	4.15-35
4.15.2.1.3	MESA Height Adjustment	4.15-35
4.15.2.1.4	MESA Exterior Blanket Removal	4.15-35
4.15.2.1.5	TV Camera Deployment	4.15-36
4.15.2.1.6	MESA Equipment Handling and Transfer	4.15-36
4.15.2.1.7	SRC Removal	4.15-37
4.15.2.2	LRV Deployment	4.15-37
4.15.2.3	ALSEP Operations	4.15-37
4.15.2.3.1	Open Scientific Equipment (SEQ) Bay	4.15-37
4.15.2.3.2	Pallet Assembly Remote Deployment	4.15-38
4.15.2.3.3	Pallet Assembly Manual Deployment	4.15-39
4.15.2.3.4	Pallet Assembly Manual Deployment in Low Attitude	4.15-40
4.15.2.3.5	Removal of RTG Fuel Element	4.15-41
4.15.2.4	Deleted	4.15-42
4.15.2.5	TV Camera Operation	4.15-42
4.15.2.6	Lunar Launch Contingency Stowage	4.15-42

CREW-MAN	PNL	PROCEDURES	REMARKS
		4.15 LUNAR STAY OPERATIONS	
		4.15.1 CABIN OPERATIONS	
		4.15.1.1 EPS Check, Post-Lunar-Landing	This task should be performed soon after any DPS burn during which ascent batteries were in parallel with descent batteries.
CDR	11	1. CB EPS: ASC ECA CONT - close	
LMP	16	2. CB EPS: ASC ECA CONT - close	
	14	3. Remove ascent batteries from line: EPS: BAT 5 NORMAL LMP FEED sw - OFF/RESET; tb - bp BAT 6 NORMAL CDR FEED sw - OFF/RESET; tb - bp	
		4. Check voltage & current of descent batteries: EPS: POWER/TEMP MON sel - BAT 1 VOLTS ind - 28.0 to 32.5 vdc AMPS ind - TBD Repeat for BAT 2, 3, & 4.	Verify load-sharing of descent batteries. To obtain proper current measurement for descent batteries, divide indicated reading by 2.
CDR	11	5. CB EPS: CROSS TIE BAL LOADS - close ASC ECA CONT - open	
LMP	16	6. CB EPS: ASC ECA CONT - open CROSS TIE BAL LOADS - close	
	14	7. Check a-c voltage from inverter No. 1: EPS: POWER/TEMP MON sel - AC BUS INVERTER sw - 1 VOLTS ind - green band INVERTER sw - 2 VOLTS ind - green band POWER/TEMP MON sel - CDR BUS	Green band represents 112 to 118 volts ac.
	11	8. CB EPS: INV 1 - open	

CREW-MAN	PNL	PROCEDURES	REMARKS
		4.15.1.2 Lunar Stay Subsystems Check	Assumptions: (1) This check occurs after DPS venting of helium and propellant and (2) CSM is not in LOS.
	11	1. All cb's open, except: CB/AC BUS B: SE WIND HTR - as required He/PQGS PROPUL DISP - close S BD ANT - close NUM LTG - close BUS TIE INV 2 - close BUS TIE INV 1 - close CB/AC BUS A: BUS TIE INV 2 - close BUS TIE INV 1 - close AC BUS VOLT - close CDR WIND HTR - as required TAPE RCDR - close INTGL LTG - close CB FLT DISP: MSN TMR - close CB HTR: URINE LINE - as required RNDZ RDR STBY - close DOCK WINDOW - as required CB INST: SIG CONDR 1 - close CB S/C: ABORT STAGE - close ATCA (PGNS) - close CB LTG: UTIL - close ANUN/DOCK/COMPNT - close CB HTR RCS SYS A/B 1: QUAD 4 - close QUAD 3 - close QUAD 2 - close QUAD 1 - close CB ECS: SUIT FAN 1 - close GLYCOL PUMP 2 - close GLYCOL PUMP 1 - close GLYCOL PUMP AUTO TRNFR - close CB COMM: UP DATA LINK - close SEC S BD XMTR/RCVR - close	When crew is monitoring windows and can detect fogging, heater operation is at crew discretion (use if condensation is noticed). When crew is not monitoring windows (sleep periods), window heaters are required to prevent condensation on windows if sun is less than 20° angle to window. (Solar angle with respect to LM coordinate systems can be determined by MSFN with aid of IMU gimbal angles.) If abort stage function is required, CB ED: LOGIC PWR A and B must be closed. (They are kept open to minimize current drain on batteries.)

CREW-MAN	PNL	PROCEDURES	REMARKS
		4.15.1.2 Lunar Stay Subsystems Check (cont)	
		SEC S BD PWR AMPL - close VHF B XMTR - close VHF A RCVR - close CDR AUDIO - close CB PGNS: LGC/DSKY - close IMU STBY - close CB EPS: BAT FEED TIE (2) - close CROSS TIE BAL LOADS - close XLUNAR BUS TIE - close DES ECA CONT - close DES ECA - close ASC ECA - close DC BUS VOLT - close Verify cb status per Lunar Stay Subsystems Check.	See figure 4-26.
	8	2. DES PROPUL: FUEL VENT sw - center; tb - bp OXID VENT sw - center; tb - bp HTR CONT: MESA sw - HI URINE LINE sw - as required ED: DES PRPLNT ISOL VLV sw - SAFE MASTER ARM sw - OFF DES VENT sw - SAFE ASC He SEL sw - BOTH LDG GEAR DEPLOY sw - SAFE; tb - bp RCS He PRESS sw - SAFE DES START He PRESS sw - SAFE ASC He PRESS sw - SAFE STAGE sw - SAFE (guarded) STAGE RELAY sw - OFF AUDIO: S BAND T/R sw - S BAND T/R ICS T/R sw - ICS T/R RELAY ON sw - RELAY OFF MODE sw - ICS/PTT AUDIO CONT sw - NORM VHF A sw - OFF VHF B sw - OFF COAS sw - OFF	Volume, squelch, and sensitivity controls will be adjusted as required.

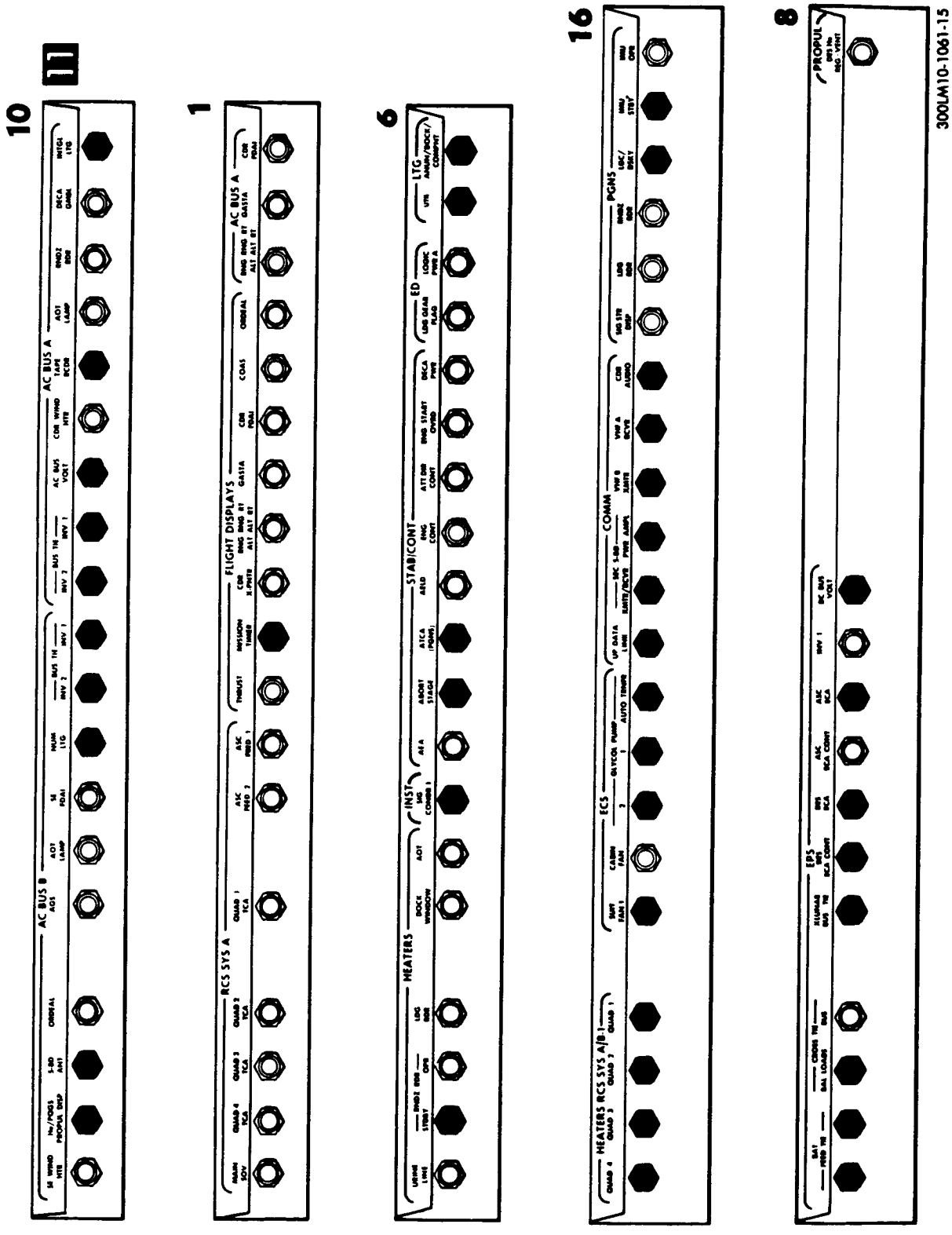

Figure 4-26. Lunar Stay Subsystems Check (Panel 11)

CREW-MAN	PNL	PROCEDURES	REMARKS
		4.15.1.2 Lunar Stay Subsystems Check (cont)	
		3. ORDEAL: FDAI 1 sw - INRTL FDAI 2 sw - INRTL EARTH/LUNAR sw - PWR OFF LTG sw - OFF MODE sw - HOLD/FAST SLEW sw - center	
	TTCA	4. THROTTLE/JETS cont (CDR) - JETS	
	5	5. Eng STOP pb/lt - reset Eng START pb/lt - not depressed +X TRANSL pb - not depressed MSN TMR: TMR CONT sw - START LTG: OVERRIDE ANUN sw - OFF OVERRIDE NUM sw - OFF OVERRIDE INTEGRAL sw - OFF SIDE PANELS sw - OFF FLOOD cont - BRIGHT ANUN/NUM cont - DIM INTEGRAL cont - DIM	
	1	6. FDAI pwr tb - OFF (in view) X pointer ind pwr fail lt - on THRUST ind pwr fail lt - on RNG/ALT ind pwr/sig fail lt - on X POINTER SCALE sw - HI MULT MASTER ALARM - off RATE/ERR MON sw - LDG RDR/CMPTR ATTITUDE MON sw - PGNS SHFT/TRUN ∡ sw - ±50° RATE SCALE sw - 25°/SEC ENG THR CONT: THR CONT sw - AUTO MAN THROT sw - CDR ENG ARM sw - OFF ATT/TRANSL sw - 2 JETS BAL CPL sw - ON ASC He REG 1 & 2 sw - center; tb - gray DES He REG 1 sw - center; tb - gray DES He REG 2 sw - center; tb - bp ACA PROP sw - ENABLE	

CREW-MAN	PNL	PROCEDURES	REMARKS
		4.15.1.2 Lunar Stay Subsystems Check (cont)	
		PRPLNT QTY MON sw - OFF PRPLNT TEMP/PRESS MON sw - ASC HELIUM MON sel - PRESS 1 ABORT pb - reset ABORT STAGE pb - reset RNG/ALT MON sw - ALT/ALT RT MODE SEL sw - PGNS GUID CONT sw - PGNS	
	3	7. ENG GMBL sw - OFF DES ENG CMD OVRD sw - OFF RADAR: LDG ANT sw - AUTO RADAR TEST sw - OFF TEST/MON sel - AGC RNDZ RADAR: SLEW RATE sw - HI RNDZ RADAR sel - LGC S/C: DEAD BAND sw - MIN GYRO TEST ROLL sw - ROLL GYRO TEST POS RT sw - OFF ROLL sw - MODE CONT PITCH sw - MODE CONT YAW sw - MODE CONT PGNS sw - OFF AGS sw - OFF IMU CAGE sw - OFF HTR CONT: TEMP MON sel - RNDZ RDR RCS SYS A/B 2 QUAD 1, 2, 3, 4 sw - AUTO EVNT TMR: RESET/COUNT sw - UP LTG: SIDE PANELS sw - OFF FLOOD sw - OVHD/FWD FLOOD cont - BRIGHT LAMP/TONE TEST sel - OFF EXTERIOR LTG sw - OFF X POINTER SCALE sw - HI MULT	
	4	8. ACA/4 JET sw (CDR) - ENABLE TTCA/TRANSL sw (CDR) - ENABLE ACA/4 JET sw (LMP) - ENABLE TTCA/TRANSL sw (LMP) - ENABLE	

CREW-MAN	PNL	PROCEDURES	REMARKS
		4.15.1.2 Lunar Stay Subsystems Check (cont)	
	AOT	9. Azimuth cont - CL Eye guard & density filter - removed MARK X pb - not depressed MARK Y pb - not depressed REJECT pb - not depressed	
	2	10. RCS: SYS A ASC FEED 1 & 2 sw - center SYS A ASC FUEL & OXID tb - bp SYS B ASC FEED 1 & 2 sw - center SYS B ASC FUEL & OXID tb - bp SYS A QUAD 1, 4, 2, 3 sw - center; tb - gray SYS B QUAD 1, 4, 2, 3 sw - center; tb - gray CRSFD sw - center; tb - bp SYS A MAIN SOV sw - center; tb - gray SYS B MAIN SOV sw - center; tb - gray TEMP/PRESS MON sel - He ACA PROP sw - ENABLE MASTER ALARM - off RATE/ERR MON sw - LDG RDR/CMPTR ATTITUDE MON sw - AGS GLYCOL sel - PUMP 1 SUIT FAN sel - 1 O2/H2O QTY MON sel - DES 2	
	TTCA	11. THROTTLE/JETS cont (LMP) - JETS	
	6	12. Eng STOP pb/lt - reset AGS STATUS sw - STAND BY	
	16 2 16	13. All cb's open except: X pointer ind pwr fail lt - on FDAI pwr tb - OFF (in view) CB RCS SYS B: TEMP/PRESS DISP FLAGS - close PQGS/DISP - close CB PROPUL: DISP/ENG OVRD LOGIC - close ASC He REG - close CB LTG: FLOOD - close ANUN/DOCK/COMPNT - close MASTER ALARM - close	Power failure light and talkback are activated when FLT DISP circuit breakers are opened.

CREW-MAN	PNL	PROCEDURES	REMARKS
		4.15.1.2 Lunar Stay Subsystems Check (cont)	
		CB S/C: AEA - close ASA - close AELD - close ATCA - close ABORT STAGE - close ATCA (AGS) - close CB INST: CWEA - close SIG SENSOR - close PCM/TE - close SIG CONDR 2 - close CB ECS: SUIT FLOW CONT - close CB COMM: DISP - close SE AUDIO - close VHF A XMTR - close VHF B RCVR - close PRIM S BD PWR AMPL - close PRIM S BD XMTR/RCVR - close S BD ANT - close PMP - close	
	16	CB ECS: DISP - close LCG PUMP - as required CABIN FAN CONT - close CABIN REPRESS - close SUIT FAN 2 - close SUIT FAN ΔP - close DIVERT VLV - close CO2 SENSOR - close CB HTR: MESA - close CB HTR RCS SYS A/B 2: QUAD 1 - close QUAD 2 - close QUAD 3 - close QUAD 4 - close CB HTR: DISP - close S BD ANT - close CB EPS: DISP - close	

CREW-MAN	PNL	PROCEDURES	REMARKS
		4.15.1.2 Lunar Stay Subsystems Check (cont)	
		DC BUS VOLT - close INV 2 - close ASC ECA - close DES ECA - close DES ECA CONT - close XLUNAR BUS TIE - close CROSS TIE BAL LOADS - close BAT FEED TIE (2) - close Verify cb status per Lunar Stay Subsystems Check.	See figure 4-27.
	14	14. EPS: ED VOLTS sw - OFF POWER/TEMP MON sel - CDR BUS INVERTER sw - 2 LMP BAT 1 tb - gray LMP BAT 2 tb - TBD CDR BAT 3 tb - TBD CDR BAT 4 tb - gray LUNAR BAT tb - TBD DES BATS tb - gray BAT 5 NORMAL LMP FEED tb - bp BAT 5 BACK UP CDR FEED tb - bp BAT 6 NORMAL CDR FEED tb - bp BAT 6 BACK UP LMP FEED tb - bp COMM: UPLINK SQUELCH sw - as desired	
	12	15. UP DATA LINK sw - OFF AUDIO: AUDIO CONT sw - NORM S BAND T/R sw - S BAND T/R ICS T/R sw - ICS T/R RELAY ON sw - RELAY OFF MODE sw - ICS/PTT VHF A sw - OFF VHF B sw - OFF COMM: S BAND MODULATE sw - PM S BAND XMTR/RCVR sw - PRIM S BAND PWR AMPL sw - PRIM S BAND VOICE sw - VOICE S BAND PCM sw - PCM S BAND RANGE sw - OFF/RESET VHF A XMTR sw - OFF (when in LOS - VOICE)	Volume, squelch, and sensitivity controls will be adjusted as required. Ref para 4.15.1.9 for EVA operation.

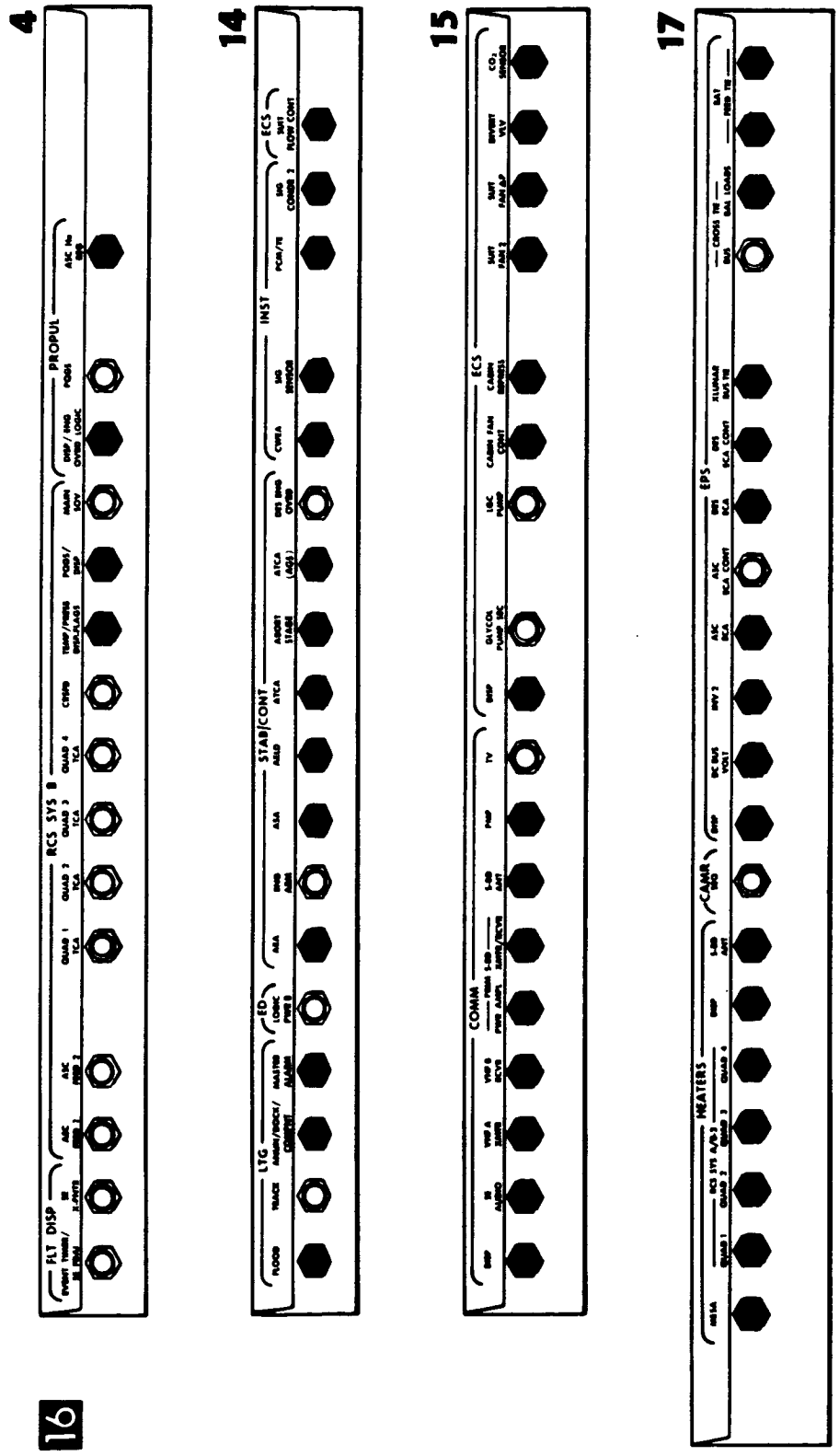

Figure 4-27. Lunar Stay Subsystems Check (Panel 16)

CREW-MAN	PNL	PROCEDURES	REMARKS
		4.15.1.2 Lunar Stay Subsystems Check (cont)	
		VHF A RCVR sw - OFF (when in LOS - ON) VHF B XMTR sw - OFF VHF B RCVR sw - OFF TLM BIOMED sw - as required TLM PCM sw - HI RECORDER sw - OFF; tb - bp COMM ANT: VHF sel - FWD or AFT TRACK MODE sw - SLEW PITCH cont - as required YAW cont - as required S BAND sel - SLEW	
		16. Overhead floodlights (CDR & LMP) - as required	
	UTL	17. CDR UTILITY LIGHT sw - as required LMP UTILITY LIGHT sw - as required	
	ECS	18. SUIT GAS DIVERTER vlv - PUSH CABIN CABIN REPRESS vlv - AUTO LO PLSS FILL vlv - CLOSE PRESS REG A vlv - CABIN PRESS REG B vlv - CABIN DES O2 vlv - OPEN #1 ASC O2 vlv - CLOSE #2 ASC O2 vlv - CLOSE SUIT ISOL vlv (CDR) - SUIT FLOW SUIT ISOL vlv (LMP) - SUIT FLOW ASC H2O vlv - CLOSE SEC EVAP FLOW vlv - CLOSE PRI EVAP FLOW #2 vlv - CLOSE DES H2O vlv - OPEN PRI EVAP FLOW #1 vlv - OPEN WATER TANK SELECT vlv - DES SUIT TEMP vlv - adjust LIQUID GARMENT COOLING vlv - COLD CABIN GAS RETURN vlv - AUTO SUIT CIRCUIT RELIEF vlv - AUTO CO2 CANISTER SEL vlv - PRIM PRIM CO2 CANISTER cover - CLOSE SEC CO2 CANISTER cover - CLOSE WATER SEP SEL vlv - PUSH SEP 1 Cabin relief & dump vlv (ovhd) - AUTO	

CREW-MAN	PNL	PROCEDURES	REMARKS
		4.15.1.2 Lunar Stay Subsystems Check (cont)	
	+Z27	Cabin relief & dump vlv (fwd) - AUTO HI PLSS O2 FILL vlv - CLOSE	
		4.15.1.3 Open Forward Hatch (Cabin Side)	Assumption: Cabin is depressurized.
		1. Verify/set cabin relief & dump vlv (fwd) - OPEN	
		2. Grasp forward hatch handle & push.	
		3. Rotate hatch handle counterclockwise to UNLOCK.	
		4. Pull hatch open.	Forward hatch is self-securing in any open position.
		4.15.1.4 Open Forward Hatch (Outside)	
		1. Grasp forward hatch handle & pull.	
		2. Rotate hatch handle clockwise to UNLOCK.	
		3. Push hatch open.	Forward hatch is self-securing in any open position. If hatch cannot be opened, cabin relief and dump vlv (fwd) - PULL TO DUMP and hold, to bleed off any accumulated pressure. External handle of cabin relief and dump vlv (fwd) is spring-loaded to return to automatic when released.
		4.15.1.5 Close Forward Hatch (Cabin Side)	No special constraints or protection required for hatch seal. Crewman may wipe seal with gloved finger to verify that there is no debris on seal.
		1. Guide forward hatch to closed position.	
		2. Grasp hatch handle & push.	
		3. Rotate hatch handle clockwise to LOCK.	
		4. Verify that hatch handle pops out of detent, then release.	
		5. Cabin relief & dump vlv (fwd) - AUTO	

CREW-MAN	PNL	PROCEDURES	REMARKS
		4.15.1.6 Close Forward Hatch (Outside)	
		1. Grasp forward hatch handle & guide hatch to closed position.	
		2. Pull hatch handle & rotate counterclockwise to LOCK.	
		3. Verify that hatch handle pops out of detent, then release.	
		4.15.1.7 ARS Purge (EVA Preparation)	Assumptions: (1) Both crewmen are on ARS and (2) EVA crewman is connected to PLSS.
		CAUTION If cabin pressure fails during purging: SUIT CIRCUIT RELIEF vlv - AUTO CABIN GAS RETURN vlv - EGRESS PRESS REG A & B vlvs - EGRESS	
	ECS	1. SUIT GAS DIVERTER vlv - PULL EGRESS	
		2. SUIT CIRCUIT RELIEF vlv - CLOSE	
		3. CABIN GAS RETURN vlv - OPEN	
		4. CO2 CANISTER SEL vlv - midposition	
		5. PRESS REG A vlv - EGRESS	
		6. PRESS REG B vlv - DIRECT O2 for 2 minutes, then EGRESS	
		7. CABIN GAS RETURN vlv - EGRESS	Crew monitor and maintains ARS pressure > cabin pressure, but not >5.5 psia.
		8. CO2 CANISTER SEL vlv - PRIM	
	RCU	9. FAN sw - ON	
		10. SUIT ISOL vlv (LMP) - SUIT DISC	
CDR		11. Perform ARS/PGA Pressure Integrity Check.	Ref para 4.2.16.

CREW-MAN	PNL	PROCEDURES	REMARKS
		4.15.1.7 ARS Purge (EVA Preparation) (cont) CAUTION To preclude violating ARS purge, SUIT CIRCUIT RELIEF vlv must be closed following CDR's ARS/PGA Pressure Integrity Check & ARS pressure maintained above cabin pressure until cabin pressure is dumped to 3.5 psia, at which time SUIT CIRCUIT RELIEF vlv - AUTO.	
		4.15.1.8 Subsystem Configuration for EVA Preparation	Purpose of Subsystem Configuration for EVA Preparation procedure is to verify status of LM controls at start of EVA period of operations. It is to be used as baseline for ensuing EVA operations. Assumptions: (1) CSM controls attitude in docked EVA operation (orbital flight), (2) because EVA occurs at sunrise all cabin lighting shall be adjusted to BRIGHT levels for optimum interior visibility and adaptation at egress, and (3) all LM subsystems have operated nominally up to this point in mission timeline.
LMP	ECS	1. Verify ECS Basic (Unstaged). Critical control/display status is as follows: CABIN REPRESS vlv - AUTO DES O2 vlv - OPEN WATER TANK SELECT vlv - DES CO2 CANISTER SEL vlv - PRIM PRIM CO2 CANISTER cover - CLOSE SEC CO2 CANISTER cover - CLOSE	Ref para 4.13.1.1.
CDR	11	CB ECS: GLYCOL PUMP 2 - close GLYCOL PUMP 1 - close GLYCOL PUMP AUTO TRNFR - close	
LMP	2	GLYCOL sel - PUMP 1 SUIT FAN sel - 1 O2/H2O QTY MON sel - DES 2 ECS: PRESS ind pwr fail lt - off GLYCOL ind pwr fail lt - off QUANTITY ind pwr fail lt - off GLYCOL comp caut lt - off SUIT FAN comp caut lt - off	

CREW-MAN	PNL	PROCEDURES	REMARKS
		4.15.1.8 Subsystem Configuration for EVA Preparation (cont)	
		CO2 comp caut lt - off H2O SEP comp caut lt - off	
LMP	16	CB ECS: SUIT FLOW CONT - close GLYCOL PUMP SEC - open SUIT FAN 2 - close SUIT FAN ΔP - close CO2 SENSOR - close CB HTR: MESA - close	
CDR	14	2. Verify EPS Basic (Unstaged). Critical displays as follows: EPS: LMP BAT 1 tb - gray LMP BAT 2 tb - TBD CDR BAT 3 tb - TBD CDR BAT 4 tb - gray LUNAR BAT tb - TBD DES BATS tb - gray BAT 5 NORMAL LMP FEED tb - bp BAT 5 BACKUP CDR FEED tb - bp BAT 6 NORMAL CDR FEED tb - bp BAT 6 BACKUP LMP FEED tb - bp	Ref para 4.13.4.1.
CDR	11	3. CB S/C: ATT DIR CONT - open	
	8	4. HTR CONT: MESA sw - HI URINE LINE sw - OFF ED: MASTER ARM sw - OFF STAGE sw - SAFE	
	1 8 1	5. ENG THR CONT: ENG ARM sw - OFF ED: LDG GEAR DEPLOY tb - gray GUID CONT sw - PGNS ABORT pb - reset ABORT STAGE pb - reset	
	3	6. DES ENG CMD OVRD sw - OFF S/C: ROLL, PITCH, YAW sw - MODE CONT PGNS sw - OFF	

CREW-MAN	PNL	PROCEDURES	REMARKS
		4.15.1.8 Subsystem Configuration for EVA Preparation (cont)	
		7. Perform LGC Power-Down Program (P06).	Ref para 4.6.1.2
		8. Verify Communications Basic	Ref para 4.13.2.1
		4.15.1.9 PLSS/EVCS Electrical Checkout, Two-Man EVA	Assumption: Volume controls will be adjusted as required.
LMP	12	1. COMM: S BAND MODULATE sw - FM	
	16	2. CB COMM: TV - close	
		3. Verify voice comm with MSFN.	
	12	4. AUDIO: S BAND T/R sw - S BAND T/R ICS T/R sw - ICS T/R RELAY ON sw - RELAY ON MODE sw - VOX VOX SENS tw - 9 VHF A sw - T/R VHF B sw - RCV	
CDR	8	5. AUDIO: S BAND T/R sw - S BAND T/R ICS T/R sw - ICS T/R RELAY ON sw - RELAY OFF MODE sw - VOX VOX SENS tw - 9 VHF A sw - T/R VHF B sw - RCV	
		6. Ensure LM EVA antenna deployed.	
LMP	12	7. COMM ANT: VHF sel - EVA	
		8. COMM: VHF A XMTR sw - VOICE VHF A RCVR sw - ON VHF B XMTR sw - OFF VHF B RCVR sw - ON VHF A SQUELCH tw - noise threshold + 1-1/2 div VHF B SQUELCH tw - noise threshold + 1-1/2 div	

CREW-MAN	PNL	PROCEDURES	REMARKS
		4.15.1.9 PLSS/EVCS Electrical Checkout, Two-Man EVA (cont)	
		TLM BIOMED sw - OFF	COMM: TLM BIOMED sw - OFF removes biomed signal power from crew communications cables.
		RECORDER sw - as desired	
		CAUTION All LM & PLSS electrical connectors must be deadfaced before mating or demating.	
	16	9. CB COMM: SE AUDIO - open	CB COMM: SE AUDIO - open removes LMP mike power and earphone signal; intercom function is lost. Removes power from SE audio center, DSEA, and VHF A transmitter key.
		10. Disconnect LM cable from PGA.	
		11. Secure LM comm cable.	
	RCU	12. EVC-2 MODE SEL sw - 0	
		13. Connect EVC-2 electrical umbilical to PGA electrical connector.	
	16	14. CB COMM: SE AUDIO - close	CB COMM: SE AUDIO - close restores SE audio center power.
	RCU	15. PTT sw - MAIN EVC-2 MODE SEL sw - A	Low PGA pressure and low vent will cause 10-second warning tone each time EVC-2 MODE SEL sw is repositioned.
		16. Verify voice with CDR.	LMP will have RF sidetone via LM.
		NOTE Unstow PLSS antenna if it transmits garbled voice communications and/or loses telemetry.	
		CAUTION All LM & PLSS electrical connectors must be deadfaced before mating or demating.	

CREW-MAN	PNL	PROCEDURES	REMARKS
		4.15.1.9 PLSS/EVCS Electrical Checkout, Two-Man EVA (cont)	
CDR	11	17. CB COMM: CDR AUDIO - open	CB COMM: CDR AUDIO - open removes CDR mike power and earphone signal; intercom function is lost. Removes power from CDR audio center and VHF B transmitter key.
		18. Disconnect LM cable from PGA.	
		19. Secure LM comm cable.	
	RCU	20. EVC-1 MODE SEL sw - 0	
		21. Connect PLSS/EVC-1 electrical umbilical to PGA electrical connector.	
	11	22. CB COMM: CDR AUDIO - close	CB COMM: CDR AUDIO - close restores CDR audio center power.
	8	23. AUDIO: VHF A sw - OFF VHF B sw - OFF	
	RCU	24. PTT sw - MAIN EVC-1 MODE SEL sw - B	
		25. Verify voice with LMP.	CDR cannot hear MSFN at this time.
LMP		26. EVC-2 MODE SEL sw - B	
CDR		27. EVC-1 MODE SEL sw - A	
		28. Verify voice with LMP.	LMP cannot hear MSFN at this time.
CDR/ LMP	RCU	29. EVC-1 & -2 MODE SEL sw - AR	
		30. Verify voice with each other.	
		31. Verify voice & telemetry comm with MSFN.	
LMP	16	32. CB COMM: TV - open	

LM 3193

CREW-MAN	PNL	PROCEDURES	REMARKS
		4.15.1.9 PLSS/EVCS Electrical Checkout, Two-Man EVA (cont)	
		NOTE Perform following steps if comm check with MSFN fails due to weak signal.	
	12	33. COMM S BAND MODULATE sw - PM	
		34. Verify voice & telemetry comm with MSFN.	
	16	35. CB COMM: TV - close	
	12	36. COMM: S BAND MODULATE sw - FM	
		4.15.1.10 PLSS/EVCS Electrical Checkout, One-Man EVA	Assumption: Volume controls will be adjusted as required.
LMP	12	1. COMM: S BAND MODULATE sw - FM	
	16	2. CB COMM: TV - close	
		3. Verify voice comm with MSFN.	
	12	4. AUDIO: S BAND T/R sw - S BAND T/R ICS T/R sw - ICS T/R RELAY ON sw - RELAY OFF MODE sw - VOX VOX SENS tw - 9 VHF A sw - RCV VHF B sw - T/R	
CDR	8	5. AUDIO: S BAND T/R sw - S BAND T/R ICS T/R sw - ICS T/R RELAY ON sw - RELAY ON	

CREW-MAN	PNL	PROCEDURES	REMARKS
		4.15.1.10 PLSS/EVCS Electrical Checkout, One-Man EVA (cont)	
		MODE sw - VOX VOX SENS tw - 9 VHF A sw - RCV VHF B sw - T/R	
		6. Ensure LM EVA antenna deployed.	
LMP	12	7. COMM ANT: VHF sel - EVA	
		8. COMM: VHF A XMTR sw - OFF VHF A RCVR sw - ON VHF B XMTR sw - VOICE VHF B RCVR sw - ON VHF A SQUELCH tw - noise threshold + 1 1/2 div VHF B SQUELCH tw - noise threshold + 1 1/2 div TLM BIOMED sw - LEFT or RIGHT	COMM: TLM BIOMED sw - LEFT if CDR in LM; RIGHT, if LMP in LM. COMM: TLM BIOMED sw - OFF removes biomed signal power from crew communications cables.
		RECORDER sw - as desired	
		CAUTION All electrical connectors must be deadfaced before mating or demating.	
CDR	11	9. CB COMM: CDR AUDIO - open	
		10. Disconnect LM comm cable from PGA.	
		11. Secure LM comm cable.	
	RCU	12. EVC-1 MODE SEL sw - 0	
		13. Connect PLSS/EVC electrical umbilical to PGA electrical connector.	
CDR	11	14. CB COMM: CDR AUDIO - close	

CREW-MAN	PNL	PROCEDURES	REMARKS
		4.15.1.10 PLSS/EVCS Electrical Checkout, One-Man EVA (cont)	
	RCU	15. PTT sw - MAIN EVC-1 MODE SEL sw - B	Low PGA pressure and low vent will cause 10-second warning tone each time EVC-1 MODE SEL sw is repositioned.
		16. Verify voice comm with LMP & MSFN.	CDR will have RF sidetone via LM.
LMP	12	17. AUDIO: VHF A sw - T/R VHF B sw - RCV	
CDR	8	18. AUDIO: VHF A sw - T/R VHF B sw - RCV	
LMP	12	19. COMM: VHF A XMTR sw - VOICE VHF B XMTR sw - OFF	
CDR	RCU	20. EVC-1 MODE SEL sw - A	
		21. Verify voice with LMP.	
		22. Verify voice & telemetry comm with MSFN.	
		NOTE Perform following steps if comm check with MSFN fails due to weak signal.	
LMP	12	23. COMM: S BAND MODULATE sw - PM	
		24. Verify voice & telemetry comm with MSFN.	
	16	25. CB COMM: TV - close	
		26. COMM: S BAND MODULATE sw - FM	

CREW-MAN	PNL	PROCEDURES	REMARKS
		4.15.1.11 Final Subsystems Configuration for Egress	Purpose of Final Subsystems Configuration for Egress procedure is to verify status of LM controls before cabin depressurization. Crew have donned PLSS and are receiving PLSS oxygen.
	ECS	1. SUIT GAS DIVERTER vlv - PULL EGRESS PRESS REG A vlv - EGRESS PRESS REG B vlv - EGRESS DES O2 vlv - OPEN SUIT ISOL vlv (LMP) - SUIT DISC SUIT ISOL vlv (CDR) - SUIT DISC CABIN GAS RETURN vlv - EGRESS CO2 CANISTER SEL vlv - PRIM SUIT CIRCUIT RELIEF vlv - AUTO	For ECS controls not listed, refer to ECS Basic (Unstaged) procedure (para 4.13.1.1).
	16	2. CB ECS: SUIT FAN ΔP - open SUIT FAN 2 - open SUIT FLOW CONT - close LCG PUMP - open CABIN REPRESS - open CABIN FAN CONT - close CB HTR: MESA - close	
	11	3. CB ECS: CABIN FAN - open GLYCOL PUMP 2 - close GLYCOL PUMP 1 - close GLYCOL PUMP AUTO TRNFR - close	
	2	4. GLYCOL sel - PUMP 1 SUIT FAN sel - 2 O2/H2O QTY MON sel - DES 2 ECS: PRESS ind pwr fail lt - off GLYCOL ind pwr fail lt - off QUANTITY ind pwr fail lt - off GLYCOL comp caut lt - off SUIT FAN comp caut lt - off CO2 comp caut lt - off H2O SEP comp caut lt - on ECS caut lt - on	ECS caut lt and H2O SEP comp caut lt - on when separator speed <800 rpm.
		5. Verify EPS Basic (Unstaged).	Ref para 4.13.4.1.

CREW-MAN	PNL	PROCEDURES	REMARKS
		4.15.1.11 Final Subsystems Configuration for Egress (cont)	
	14	6. Critical displays are as follows: EPS: LMP BAT 1 tb - gray LMP BAT 2 tb - TBD CDR BAT 3 tb - TBD CDR BAT 4 tb - gray LUNAR BAT tb - TBD DES BATS tb - gray BAT 5 NORMAL LMP FEED tb - bp BAT 5 BACK UP CDR FEED tb - bp BAT 6 NORMAL CDR FEED tb - bp BAT 6 BACK UP LMP FEED tb - bp	
	3	7. LTG: EXTERIOR LTG sel - OFF	
	16	8. CB LTG: TRACK - open	
	11	9. CB S/C: ATT DIR CONT - open	
	8	10. ED: MASTER ARM sw - OFF STAGE sw - SAFE HTR CONT: MESA sw - HI	
	1	11. ENG THR CONT: ENG ARM sw - OFF	
	3	12. S/C: PGNS & AGS sw - OFF	
		13. Verify Relay Mode: EVA (Two-Man EVA)	Ref para 4.13.2.3.
		4.15.1.12 ECS Status (Two Men on Lunar Surface)	
	ECS	1. SUIT GAS DIVERTER vlv - PULL EGRESS CABIN REPRESS vlv - CLOSE LO PLSS FILL vlv - CLOSE PRESS REG A vlv - EGRESS PRESS REG B vlv - EGRESS DES O2 vlv - OPEN #1 ASC O2 vlv - CLOSE #2 ASC O2 vlv - CLOSE SUIT ISOL vlv (LMP) - SUIT DISC SUIT ISOL vlv (CDR) - SUIT DISC	SUIT GAS DIVERTER vlv - PULL EGRESS, during unstaged main engine firing.

CREW-MAN	PNL	PROCEDURES	REMARKS
		4.15.1.12 ECS Status (Two Men on Lunar Surface) (cont)	
		SEC EVAP FLOW vlv - CLOSE	
		PRI EVAP FLOW #2 vlv - CLOSE	
		WATER TANK SELECT vlv - DES	
		SUIT TEMP vlv - adjust	
		ASC H2O vlv - CLOSE	
		DES H2O vlv - CLOSE	
		PRI EVAP FLOW #1 vlv - OPEN	
		CABIN GAS RETURN vlv - EGRESS	
		CO2 CANISTER SEL vlv - PRIM	
		SUIT CIRCUIT RELIEF vlv - AUTO	
		PRIM CO2 CANISTER cover - CLOSE	
		SEC CO2 CANISTER cover - CLOSE	
		WATER SEP SEL vlv - PUSH SEP 1	
		LIQUID GARMENT COOLING vlv - COLD	
	+Z27	HI PLSS FILL vlv - CLOSE	
		2. Cabin relief & dump vlv (ovhd) - AUTO	
		Cabin relief & dump vlv (fwd) - OPEN	
	16	3. CB ECS:	
		SUIT FAN ΔP - open	
		SUIT FAN 2 - open	
	11	4. CB ECS:	
		SUIT FAN 1 - close	
		CABIN FAN - open	
		GLYCOL PUMP 2 - close	
		GLYCOL PUMP 1 - close	
		GLYCOL PUMP AUTO TRNFR - close	
	2	5. GLYCOL sel - PUMP 1	
		SUIT FAN sel - 2	
		O2/H2O QTY MON sel - DES 2	
		ECS:	
		PRESS ind pwr fail lt - off	
		GLYCOL ind pwr fail lt - off	
		QUANTITY ind pwr fail lt - off	
		GLYCOL comp caut lt - off	
		SUIT FAN comp caut lt - off	
		CO2 comp caut lt - off	
		H2O SEP comp caut lt - on	
		ECS caut lt - on	

CREW-MAN	PNL	PROCEDURES	REMARKS
		4.15.1.12 ECS Status (Two Men on Lunar Surface) (cont)	
	16	6. CB ECS: DISP - close GLYCOL PUMP SEC - open LCG PUMP - open CABIN FAN CONT - close SUIT FAN 2 - open DIVERT VLV - close CO2 SENSOR - close	
	2	7. ECS: PRESS ind pwr fail lt - off SUIT PRESS ind - 3.6 to 4.0 psia CABIN PRESS ind - 0 psia PART PRESS CO2 ind - 7.6 mm Hg GLYCOL ind pwr fail lt - off GLYCOL temp ind - 33° to 49° F GLYCOL press ind - 21 to 37 psia GLYCOL comp caut lt - off SUIT FAN comp caut lt - off CO2 comp caut lt - off H2O SEP comp caut lt - on ECS caut lt - on	
	2	8. O2/H2O QTY MON sel - DES 2 ECS: QUANTITY ind pwr fail lt - off O2 QUANTITY ind - TBD% H2O QUANTITY ind - TBD% CAUTION Crewman must check following cb's immediately before egress: CB (11) PGNS: RNDZ RDR - open CB (11) ECS: CABIN FAN - open CB (16) ECS: GLYCOL PUMP SEC - open	Quantity of consumables displayed is function of mission elapsed time.

LM 2007, LM 3215

CREW-MAN	PNL	PROCEDURES	REMARKS
		4.15.1.13 Post-EVA Final Subsystems Configuration	Purpose of Post-EVA Subsystems Configuration procedure is to verify/set LM controls after both crewmen have returned LM to nominal in-flight status.
LMP	ECS	1. Verify ECS Basic (Unstaged) Critical control positions are as follows: SUIT GAS DIVERTER vlv - PUSH CABIN	Ref para 4.13.1.1. SUIT FAN sel may remain in position 2 between lunar surface EVA's. If helmets/gloves doffed, Reverse O2 hoses R/B & B/R Position: SUIT GAS DIVERTER vlv - PULL EGRESS CABIN GAS RETURN vlv - EGRESS PGA DIVERTER vlvs - Horizontal For water separator speed control
		CAUTION Rapid switching of CABIN REPRESS vlv from AUTO to CLOSE, or CLOSE to AUTO, causes loud bang. This does not damage valve. To change CABIN REPRESS vlv position, smooth, slow movement is recommended.	
		CABIN REPRESS vlv - AUTO PRESS REG A vlv - CABIN PRESS REG B vlv - CABIN CABIN GAS RETURN vlv - AUTO SUIT CIRCUIT RELIEF vlv - AUTO Cabin relief & dump vlv (ovhd) - AUTO Cabin relief & dump vlv (fwd) - AUTO	
		NOTE For sleep mode, stow LM O2 hoses R/R & B/B. Position both SUIT ISOL vlvs - SUIT FLOW SUIT GAS DIVERTER vlv - PUSH CABIN CABIN GAS RETURN vlv - AUTO	ARS configuration required for noise control during crew sleep periods.
CDR	11	CB ECS: CABIN FAN - open SUIT FAN 1 - close	
LMP	16	CB ECS: CABIN REPRESS - close SUIT FAN 2 - close SUIT FAN ΔP - close DIVERT VLV - close	

SYMPTOM	PROCEDURE	REMARKS
4 (1) Rate gyro test fails	1 Both FDAI rate ind agree? NO → 2 RATE NEEDLE FAILURE. YES → 3 Any rate needle remains at zero? YES → 4 Needles at zero? ALL → 5 TEST VOLTAGE LOST, OR GYRO TEST ROLL SW OR GYRO TEST POS RT SW FAILED OPEN. ONE → 10 Dynamic ck. TWO → 8 GYRO TEST ROLL SW FAILED INTO UNAFFECTED AXIS OR DOUBLE GYRO FAILURE. NO → 6 Rate needles deflect in one direction only? YES → 7 GYRO TEST POS RT SW FAILED CLOSED. NO → 9 All rate needles peg in both directions? NO → 10 Dynamic ck. •GUID CONT - AGS •MODE CONT (AGS) - ATT HOLD •ATT CONT (3) - MODE CONT •ACA - cmd mnvr in axis •Monitor for smooth rate with damping. Response norm? YES → 11 GYRO TEST ROLL SW FAILED OPEN IN AFFECTED AXIS. NO → 13 RATE GYRO FAILED IN AFFECTED AXIS. (3) → 14 •ATT CONT (affected axis) - PULSE or DIR or •GUID CONT - PGNS. YES → 12 RATE SCALE SW FAILED OFF. (2)	(1) Test all three axes in both directions. (2) Assumption: RATE SCALE - 25°/SEC, but switch failed open when test was run. Failure results in selection of 5 /second scale. (3) AGS rate command lost for affected axis. If roll or pitch, AGS DPS burn capability lost.
5 (1) RNG/RNG RT pwr/sig fail lt. Light on if: Signal lost. A-C or d-c power to ind lost. 512 KHZ from timing equipment in PCMTEA lost	1 Ck for short. cb (11) FLT DISP: RNG/RNG RT or cb/AC BUS A: RNG/RNG RT - open & cannot be reset? YES → 2 RNG/RNG RT IND SHORTED → 3 Remove power to ind. •Other cb - open. NO → 4 Ck for open. •cb (11) FLT DISP: RNG/RNG RT - open. Pwr/sig fail lt - off? YES → 6 RNG/RNG RT IND FAILED DUE TO OPEN. NO → 5 •cb (11) FLT DISP: RNG/RNG RT - close •cb/AC BUS A: RNG/RNG RT - open. Pwr/sig fail lt - off? YES → 6 RNG/RNG RT IND FAILED DUE TO OPEN. NO → 8 Verify status of ind-driving source. •Radar - Ck xmtr power signal strength •AEA - Ck operation via DEDA. Source operating normally? YES → 9 • Select alt display source (when operating). For which display source is pwr/sig fail lt - off? NO → 11 •Correct source malfunction. 6 → 7 RR range & range rate can be displayed on DSKY as backup to RNG/RNG RT ind. (2) LR & AGS only → 10 RR output failed or open in data or selector line to RNG/RNG RT ind. RR only → 12 Failure between RNG/ALT MON sw and MODE SEL sw. (3) RR & either LR or AGS → 13 LR or AGS output or selector line to RNG/RNG RT ind failed. (3) LR only or AGS only → 14 Failure of indicator. (3) None → 15 Failure of mode select logic common line, or timing (from PCMTEA), or indicator. (3)	(1) Light is normally on when power is supplied and indicator is not used by selected source (PGNS, AGS, LR, or RR). If either input signal goes to zero, light goes on. Light may flash randomly if range rate is < 10 fps. Neither condition indicates malfunction. Since PGNS output is supplied to indicator only during average g at powered descent or ascent, PGNS is not considered in the malfunction analysis. (2) RR range and range rate may be displayed if a and (b and/or c) are true. a. RR locked on to CSM. b. P20 in process. c. Monitor V16 N78: R1 Range XXX.XX nm R2 Range rate XXXX.X fps. (3) Alternative display sources: a. RR range, range-rate - N78 b. LGC range, range-rate, θ - N54 (if R31 in process by V83E) c. LGC latitude, longitude, altitude - N43 (if P21 in process) d. LM altitude (h) - DEDA 337 e. Altitude rate (ḣ) - DEDA 367 f. LM - CSM range - DEDA 317 g. LM - CSM range - rate DEDA 440 h. LGC altitude, altitude rate: N63 (during average g in powered descent) N94 (during average g in powered ascent)

A-300LM5-1016

GUIDANCE & CONTROL FLIGHT DISPLAYS

SYMPTOM	PROCEDURE	REMARKS

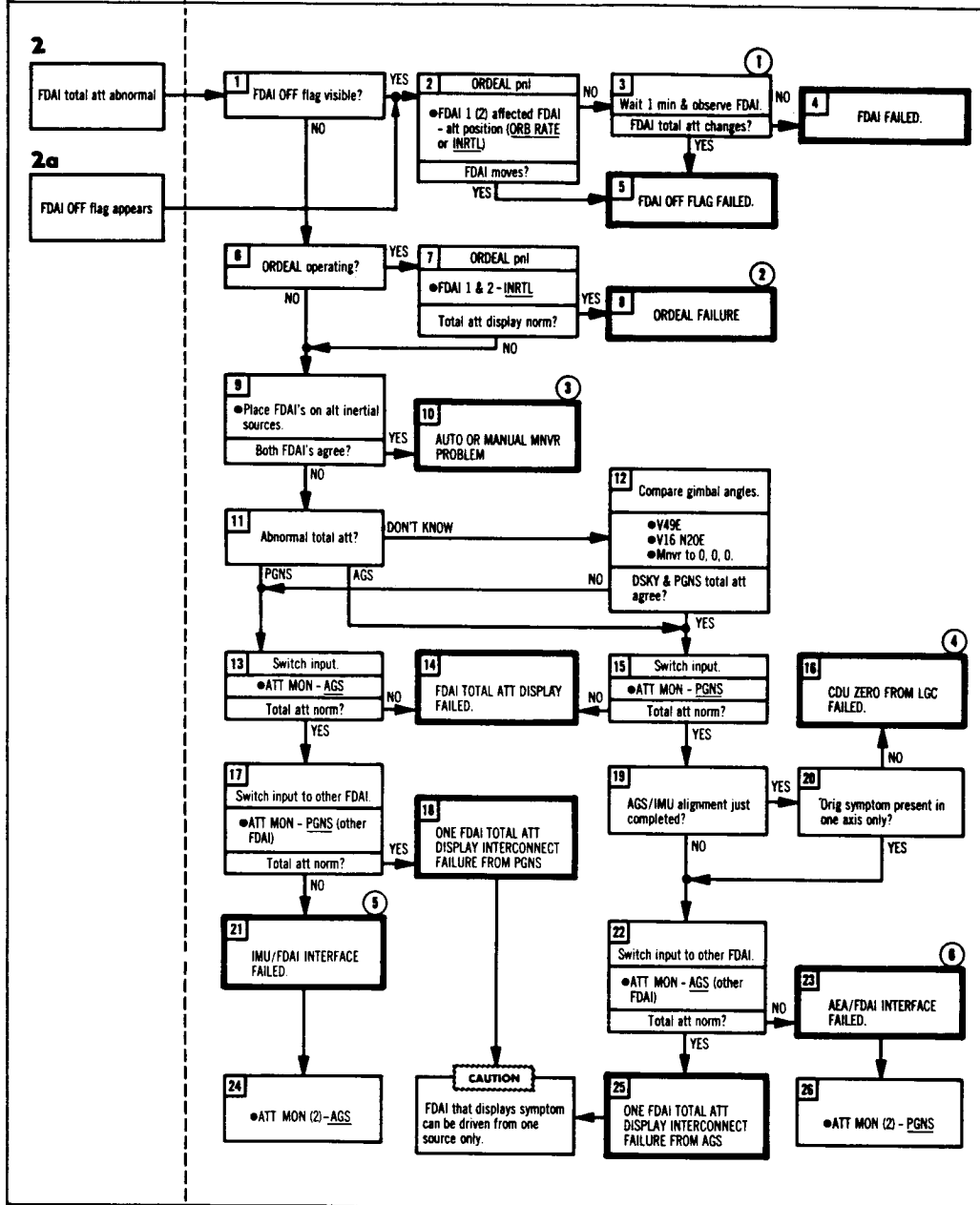

(1) Orbital rate and inertial total attitude displays are identical 1 minute per orbital period. Waiting 1 minute resolves possible ambiguity.

(2) Failure may be confined to ORDEAL resolvers to only one FDAI.

(3) LM did not achieve desired automatic or manual maneuver.

(4) AGS - IMU alignment capability lost. Align AGS by backup method.

(5) Failure includes one of six IMU output lines or GASTA failure.

(6) Failure includes:
One of six AEA output channels failed.
One of three AEA return lines failed.

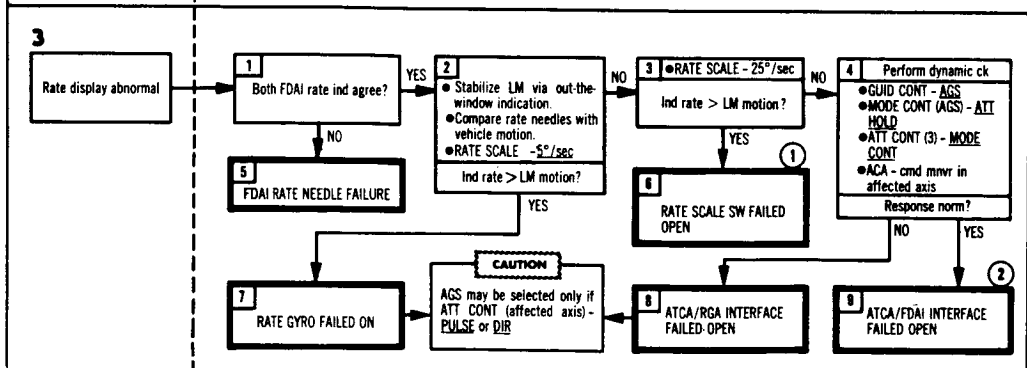

(1) 5°/sec scale always in effect

(2) Rate display lost. Possible needle movement may be due to vibration.

A-300LM5-1019

SYMPTOM	PROCEDURE	REMARKS

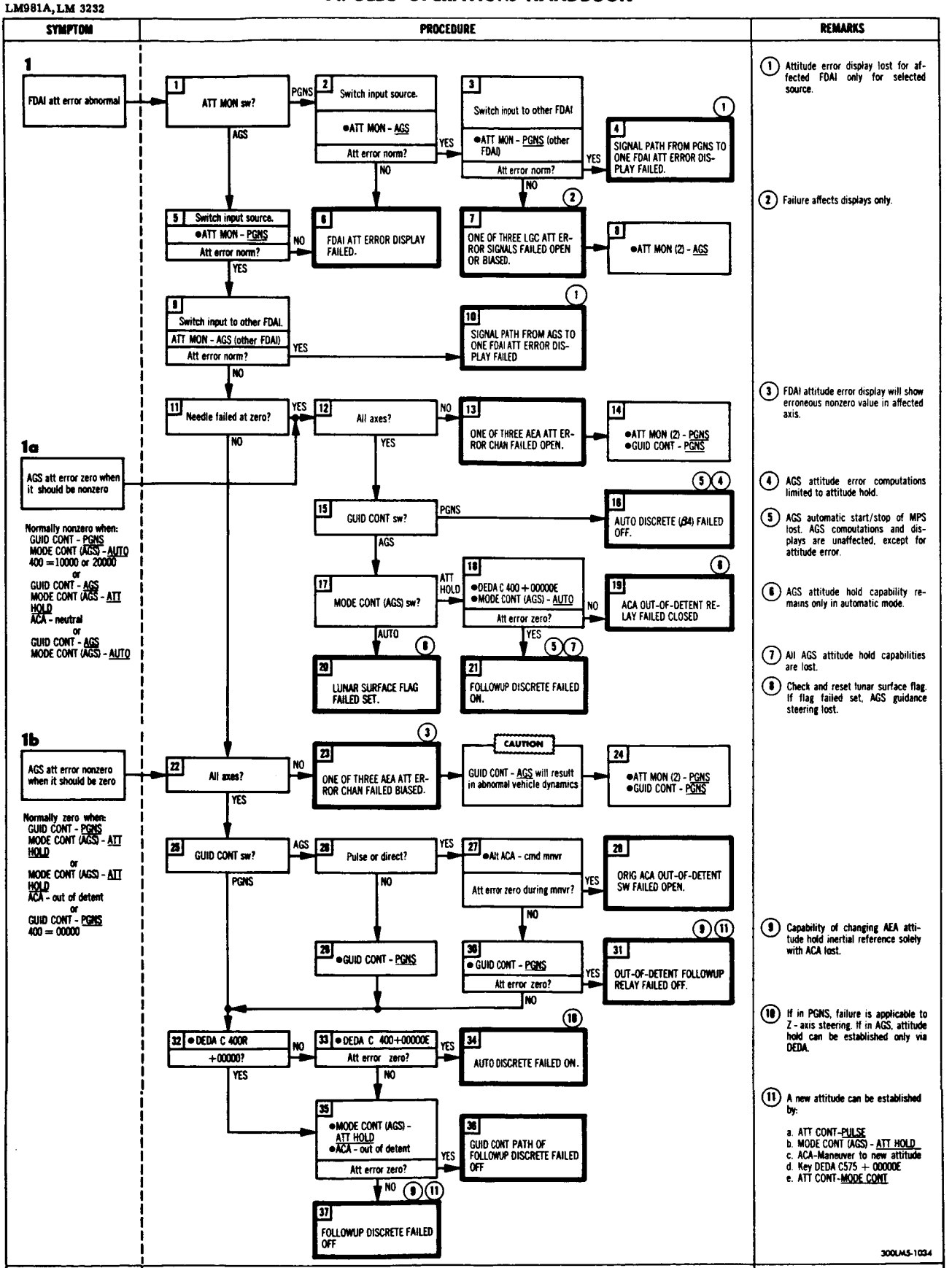
SYMPTOM
PROCEDURE
REMARKS
1
FDAI att error abnormal
1 ATT MON sw?
PGNS
AGS
2 Switch input source.
•ATT MON - AGS
Att error norm?
YES
NO
3 Switch input to other FDAI
•ATT MON - PGNS (other FDAI)
Att error norm?
YES
NO
4 SIGNAL PATH FROM PGNS TO ONE FDAI ATT ERROR DISPLAY FAILED.
5 Switch input source.
•ATT MON - PGNS
Att error norm?
NO
YES
6 FDAI ATT ERROR DISPLAY FAILED.
7 ONE OF THREE LGC ATT ERROR SIGNALS FAILED OPEN OR BIASED.
8 •ATT MON (2) - AGS
9 Switch input to other FDAI.
ATT MON - AGS (other FDAI)
Att error norm?
YES
NO
10 SIGNAL PATH FROM AGS TO ONE FDAI ATT ERROR DISPLAY FAILED
11 Needle failed at zero?
YES
NO
12 All axes?
NO
YES
13 ONE OF THREE AEA ATT ERROR CHAN FAILED OPEN.
14 •ATT MON (2) - PGNS
•GUID CONT - PGNS
1a
AGS att error zero when it should be nonzero
Normally nonzero when:
GUID CONT - PGNS
MODE CONT (AGS) - AUTO
400 = 10000 or 20000
or
GUID CONT - AGS
MODE CONT (AGS - ATT HOLD
ACA - neutral
or
GUID CONT - AGS
MODE CONT (AGS) - AUTO
15 GUID CONT sw?
PGNS
AGS
16 AUTO DISCRETE (β4) FAILED OFF.
17 MODE CONT (AGS) sw?
ATT HOLD
AUTO
18 •DEDA C 400 + 00000E
•MODE CONT (AGS) - AUTO
Att error zero?
NO
YES
19 ACA OUT-OF-DETENT RELAY FAILED CLOSED
20 LUNAR SURFACE FLAG FAILED SET.
21 FOLLOWUP DISCRETE FAILED ON.
1b
AGS att error nonzero when it should be zero
Normally zero when:
GUID CONT - PGNS
MODE CONT (AGS) - ATT HOLD
or
MODE CONT (AGS) - ATT HOLD
ACA - out of detent
or
GUID CONT - PGNS
400 = 00000
22 All axes?
NO
YES
23 ONE OF THREE AEA ATT ERROR CHAN FAILED BIASED.
CAUTION
GUID CONT - AGS will result in abnormal vehicle dynamics
24 •ATT MON (2) - PGNS
•GUID CONT - PGNS
25 GUID CONT sw?
AGS
PGNS
26 Pulse or direct?
YES
NO
27 •Alt ACA - cmd mnvr
Att error zero during mnvr?
YES
NO
28 ORIG ACA OUT-OF-DETENT SW FAILED OPEN.
29 •GUID CONT - PGNS
30 • GUID CONT - PGNS
Att error zero?
YES
NO
31 OUT-OF-DETENT FOLLOWUP RELAY FAILED OFF.
32 • DEDA C 400R
+00000?
NO
YES
33 • DEDA C 400+00000E
Att error zero?
YES
NO
34 AUTO DISCRETE FAILED ON.
35 •MODE CONT (AGS) - ATT HOLD
•ACA - out of detent
Att error zero?
YES
NO
36 GUID CONT PATH OF FOLLOWUP DISCRETE FAILED OFF
37 FOLLOWUP DISCRETE FAILED OFF
1 Attitude error display lost for affected FDAI only for selected source.
2 Failure affects displays only.
3 FDAI attitude error display will show erroneous nonzero value in affected axis.
4 AGS attitude error computations limited to attitude hold.
5 AGS automatic start/stop of MPS lost. AGS computations and displays are unaffected, except for attitude error.
6 AGS attitude hold capability remains only in automatic mode.
7 All AGS attitude hold capabilities are lost.
8 Check and reset lunar surface flag. If flag failed set, AGS guidance steering lost.
9 Capability of changing AEA attitude hold inertial reference solely with ACA lost.
10 If in PGNS, failure is applicable to Z - axis steering. If in AGS, attitude hold can be established only via DEDA.
11 A new attitude can be established by:
a. ATT CONT-PULSE
b. MODE CONT (AGS) - ATT HOLD
c. ACA-Maneuver to new attitude
d. Key DEDA C575 + 00000E
e. ATT CONT-MODE CONT
300LM5-1034

5.2.1 GUIDANCE & CONTROL FLIGHT DISPLAYS

Table 5-1. G&C FLT DISP Procedure Entry Sheet

Symptom	Sym No.	Page No.
FDAI att error abnormal	1	5.2-4
AGS att error zero when it should be nonzero	1a	5.2-4
AGS att error nonzero when it should be zero	1b	5.2-4
FDAI total att abnormal	2	5.2-5
FDAI OFF flag appears	2a	5.2-5
Rate display abnormal	3	5.2-5
Rate gyro test fails	4	5.2-6
RNG/RNG RT pwr/sig fail lt	5	5.2-6

5.2 MALFUNCTION PROCEDURES

The malfunction procedures enable recognition of subsystem malfunctions, determination of their cause, correction or isolation of the failure, and determination of the effect on the subsystem and the scheduled mission. The procedures cover all significant single failures. To prevent the procedures from becomming complex and unmanageable, double unrelated failures are not covered. The malfunction procedures are arranged by subsystem, or subsystem section (PGNS, AGS, CES, DPS, APS, etc), in a three-column format as follows:

Symptom Column. Symptom logic blocks in this column allow entry into the malfunction procedure. When applicable, data under these blocks explain and qualify the symptom or condition. The symptoms are arranged numerically within each subsystem or subsystem section.

Procedure Column. This column contains a step-by-step logic flow diagram, consisting primarily of action blocks, decision blocks, and failure blocks that enable failure correction and isolation. Caution and warning blocks are included for conditions, which, if not corrected, may degrade the operational integrity of a subsystem or may adversely affect crew safety. Remote event symbols refer to related remarks, to another step of the procedure, or to a step in another malfunction procedure.

Remarks Column. This column contains supplemental data related to, and referenced from, the logic blocks in the "SYMPTOM" and "PROCEDURE" column.

GUIDANCE & CONTROL FLIGHT DISPLAYS

PRIMARY GUIDANCE & NAVIGATION SECTION

ABORT GUIDANCE SECTION

CONTROL ELECTRONICS SECTION

DESCENT PROPULSION SECTION

ASCENT PROPULSION SECTION

REACTION CONTROL SUBSYSTEM

ELECTRICAL POWER SUBSYSTEM

COMMUNICATIONS SUBSYSTEM

ENVIRONMENTAL CONTROL SUBSYSTEM

EXPLOSIVE DEVICES

HEATERS

REMARKS	
PROCEDURES	5.1 ABORT PROCEDURES (To be supplied)
PNL	
CREW-MAN	

SECTION 5
CONTINGENCY PROCEDURES

CREW-MAN	PNL	PROCEDURES	REMARKS
		4.15.2.4 Deleted	
		4.15.2.5 <u>TV Camera Operation</u>	Assumptions: (1) CDR is outside of cabin and (2) LMP is in cabin.
CDR		1. Confirm S-band steerable antenna high-power operation.	
		2. Inform LMP of readiness to deploy MESA.	
LMP	12	3. COMM: S BAND MODULATE sw - FM	Five-second warmup period is required after modulation change.
	16	4. CB COMM: TV - close	
		5. Deploy MESA	
		6. Verify MSFN reception of TV signal.	
		7. When TV operation is completed:	
	16	CB COMM: TV - open	
	12	COMM:	
		S BAND PWR AMPL sw - as required	
		S BAND MODULATE sw - PM	Five-second warmup period is required after modulation change.
		4.15.2.6 <u>Lunar Launch Contingency Stowage</u>	Assumptions: (1) Early lunar launch is required, (2) cabin cannot be depressurized for equipment jettison, and (3) three-EVA mission.
		In event of mission abort during lunar operations, following loose items must be stowed.	
		1. Post-EVA 1 CSRC - LHMSSC OPS (2) - SRC racks PLSS (1) - recharge station PLSS (1) - cabin floor RCU (2) - ISA SRC - aft of ascent engine cover PLSS batteries (2) - jettison bag PLSS LiOH (2) - jettison bag Lunar overshoes - jettison bag Jettison bag - ISA TSB - ISA ISA - aft bay rest station fittings HSB (2) - ascent engine cover	

CREW-MAN	PNL	PROCEDURES	REMARKS
		4.15.2.3.5 Removal of RTG Fuel Element 1. Unstow lanyard & open astronaut/RTG protective door. 2. Unstow fuel cask lanyard from inboard surface of astronaut/RTG protective door. 3. Move away from vehicle to position in front of cask. WARNING Do not handle chain portion of lanyard. It is hot and may damage glove. 4. Pull fuel cask deployment lanyard to unlock pins & actuate tilting mechanism. 5. Continue pulling lanyard until fuel cask is tilted to desired fuel-removal attitude. Discard lanyard. 6. Retrieve dome-removal tool from pallet No. 2. 7. Remove dome (turn clockwise) from fuel cask. 8. Discard dome & dome-removal tool. 9. Retrieve fuel transfer tool from pallet No. 2 & withdraw fuel element. 10. Insert tool into cask & extract fuel element. 11. Insert fuel element into RTG. Discard tool. 12. Close astronaut/RTG protective door.	

CREW-MAN	PNL	PROCEDURES	REMARKS
		4.15.2.3.4 <u>Pallet Assembly Manual Deployment in Low Attitude</u> 1. Unstow extraction lanyard from pallet handle. 2. Attach Velcro loop portion of black & white striped lanyard to Velcro hooks on LM structure. CAUTION When pallet is in tilted-down position, it may slide out of compartment after unlatching. 3. Pull white extraction lanyard to unlatch pallet, until lanyard falls free of latch bar mechanism. 4. Disconnect pip pin from escapement mechanism (top). 5. Remove pallet, using hockey stick & extraction lanyard. 6. Rotate pallet, using extraction lanyard, so that handle side is up. 7. Release lanyard quick-release catch from forward lower edge of pallet. 8. Stow lanyards in empty stowage compartment. 9. Repeat steps 1 through 8 for other pallet. 10. Remove Velcro if used. 11. Close SEQ bay door by pulling black door-actuation lanyard. 12. Close astronaut/RTG protective door. 13. Stow lanyards.	

CREW-MAN	PNL	PROCEDURES	REMARKS
		4.15.2.3.3 Pallet Assembly Manual Deployment 1. Disconnect top pin from escapement mechanism. 2. Release lanyard quick release catch from forward lower edge of pallet. CAUTION If ALSEP is in position low, pull lanyard from top position. When ALSEP is in tilted-down position, pallet may slide out of compartment after unlatching. NOTE Do not strike PLSS antenna against descent stage. 3. Unstow lanyard from handle & pull lanyard until it falls free from latch bar mechanism. 4. Stow extraction lanyard to avoid interference with manual deployment. 5. Grasp pallet handle & pull to extract pallet from bay. Supporting pallet on bottom, remove pallet and lower it to surface (handle side up). 6. Repeat steps 1 through 5 for other pallet. 7. Close SEQ bay door by pulling black door-actuation lanyard. 8. Close astronaut/RTG protective door. 9. Stow lanyards.	

CREW-MAN	PNL	PROCEDURES	REMARKS
		4.15.2.3.2 <u>Pallet Assembly Remote Deployment</u> 1. Grasp extraction lanyard stowed on container handle. 2. Move away from vehicle for approximately full length of lanyard. 3. Pull white lanyard to unlatch pallet from LM. 4. Continue pulling white lanyard until pallet falls free from guide rails & boom is fully extended. 5. Hold white lanyard taut to prevent pallet from swinging back against vehicle. 6. Actuate black-&-white-striped lanyard by series of short, sharp jerks to lower pallet to surface, handle side up. 7. Release lanyard quick-release from forward edge of pallet. 8. Stow lanyard. 9. Remove ball-lock pin attached to container support strut. 10. Pull black-&-white-striped lanyard to retract boom into SEQ bay. 11. Stow all loose lanyards in empty stowage compartment. 12. Repeat steps 1 through 11 for other pallet. 13. Close SEQ bay door by pulling black section of door-actuation lanyard. 14. Close astronaut/RTG protective door. 15. Stow lanyards.	

CREW-MAN	PNL	PROCEDURES	REMARKS
		4.15.2.1.7 SRC Removal	
		1. Raise thermal blanket over SRC area.	SRC's must be removed in numerical order.
		2. Remove SRC.	Weighbags and secondary structure must be removed before removal of SRC No. 3.
		3. Unstow SRC table.	
		4. Mount SRC on table.	
		5. Close thermal blanket.	Maximum open time of MESA thermal blankets per EVA: Center compartment - 15 minutes Outer compartments - 1 hour 15 minutes (1st EVA) and 15 min (subsequent EVA's)
		4.15.2.2 LRV Deployment	
		1. Move to position on ladder.	Assumption: Other crewman has previously deployed the deployment cable and the two reel operating tapes.
		2. Deleted	
		3. Pull D-ring to release LRV release mechanism.	This step completes GAC/GFE procedures. GAC/GFE procedures (deployment) are not supplied in LM AOH.
		4. Descend ladder to lunar surface.	
		4.15.2.3 ALSEP Operations	
		4.15.2.3.1 Open Scientific Equipment (SEQ) Bay	
		1. Unfold thermal shield from right side of SEQ bay.	
		2. Grasp door-actuation lanyard & move away from vehicle.	
		3. Pull white section of lanyard to open astronaut protective door (RTG fuel cask heat shield).	
		4. Continue pulling lanyard to open SEQ bay door.	
		5. Stow lanyard on secondary strut, to right of SEQ bay.	

CREW-MAN	PNL	PROCEDURES	REMARKS
		4.15.2.1.5 <u>TV Camera Deployment</u>	
LMP		1. Unstow & deploy camera tripod.	
		2. Remove camera from bracket.	
		3. Set up camera on tripod, facing pallet.	
		4. Unstow & play out TV cable until color coding is visible.	
		5. Move camera away from vehicle.	
		4.15.2.1.6 <u>MESA Equipment Handling and Transfer</u>	Assumptions: (1) CDR is on lunar surface and (2) LMP is in cabin.
CDR	MESA	1. Lift center thermal blanet to expose EVA pallet.	S-band antenna to be unstowed before removal of EVA pallets No. 2 and 3.
		2. Unstow EVA pallet.	
		3. Unstow SRC table.	Step 3 to be performed after removal of EVA pallet No. 1, due to crewman reach constraint.
		4. Mount pallet on table.	
		5. Restow thermal blanket.	Maximum open time of MESA thermal blankets per EVA: Center compartment - 15 minutes Outer compartments - 1 hour 15 minutes (1st EVA) and 15 min (subsequent EVA's)
		6. Place necessary equipment (ECS LiOH canister or stero return cassette container) on pallet, for transfer.	
		7. Transfer pallet into ascent stage.	
LMP		8. Receive, unload, & return pallet to CDR.	
CDR		9. Discard pallet.	

CREW-MAN	PNL	PROCEDURES	REMARKS
LMP		4.15.2.1.2 MESA Manual Deployment	Assumption: Activation of MESA release mechanism resulted only in unlocking pallet; pallet did not deploy.
		1. Move to MESA.	
		2. Grasp manual deployment lanyard & move away from vehicle.	
		3. Pull on lanyard until pallet deploys.	
		4.15.2.1.3 MESA Height Adjustment	
		1. Unstow olive strap & draw out until fully deployed & all straps are taut.	Step 1 must be performed if MESA is resting on lunar surface following MESA Remote Deployment (para 4.15.2.1.1). Olive MESA deployment strap is drawn out from controlled strap-release mechanism (ratchet).
		2. Unstow black adjustment strap. Lift strap to disengage buckle leaf-lock.	This enables MESA to be raised or lowered.
		3. Increase lifting force to raise MESA. or Decrease lifting force to lower MESA.	MESA adjustment strap draws through buckle at approximately 40 pounds of lifting force, at strap angle of approximately 75°. (Strap angle is 0° when black strap is in line with olive strap.)
		4. Engage buckle leaf-lock by maintaining holding force while simultaneously decreasing strap angle to bring black strap in line with olive strap.	
		4.15.2.1.4 MESA Exterior Blanket Removal	
		1. Move to MESA & adjust pallet to desired height.	Ref para 4.15.2.1.3.
		2. Loosen blanket around TV lens.	
		3. Grasp strap on left half of blanket & pull blanket to left, off MESA.	
		4. Push blanket under MESA.	
		5. Pull right half of blanket to right, lifting up & over TV camera.	
		6. Push blanket under MESA.	

CREW-MAN	PNL	PROCEDURES	REMARKS
		4.15.1.20 Buddy Umbilical Stowage Bag Removal	
	+Z27	1. Unfasten Velcro on external cover.	
		2. Ensure buddy umbilical attachment straps clear pull-tabs.	
		3. Unsnap internal compartment.	
		4. Remove buddy umbilical stowage bag & secure external cover.	
		4.15.1.21 PGA Protective Stowage	
		1. Doff suits.	
		2. Place one suit on left side of ascent engine cover, with neck ring near -Z27 netting & legs extended down onto or near 233 deck (step).	Suits may be stowed, at crew preference, in one of following configurations: a. Connectors facing up b. Connectors facing down c. Suits placed back to back
		3. Place second suit on right side of ascent engine cover, with neck ring near -Z27 netting, shoulders overlapping those of other suit & legs extended down onto or near 233 deck (step).	
		4. Open empty jettision bag & insert lower legs of suits (crew preference).	
		4.15.2 EXTRAVEHICULAR ACTIVITY	
		4.15.2.1 MESA Operations	
		4.15.2.1.1 MESA Remote Deployment	
		1. Move to position on ladder.	
		2. Pull lanyard at platform side to release pip pin & activate MESA release locking mechanism.	MESA should be manually deployed if automatic system does not release locking mechanism. (Ref para 4.15.2.1.2.)
		3. Descend ladder to lunar surface.	
		4. Stow LEC on ladder cleat.	

CREW-MAN	PNL	PROCEDURES	REMARKS
		4.15.1.19.1 Deploy Sleep Station (cont)	
		4. Pass LMP inboard center support strap to CDR (beneath LMP & CDR umbilicals if connected).	
CDR		5. Attach strap to lower handrail on suit circuit assembly.	
LMP		6. Attach outboard center support strap to lower ISA fitting & straddle hammock while facing CDR flight station.	
		7. Position self in hammock, with head at LMP flight station.	
CDR		8. Attach aft fittings of CDR hammock to -Z27 attach points. Pass hammock (beneath umbilicals if connected) & attach forward straps to panel 1 and 2 hammock fittings. Adjust tension on straps for desired hammock height.	
		9. Attach outboard center support strap to vertical handrail above suit circuit assembly.	
		10. Climb into hammock, with feet facing forward. Attach inboard center support strap to outboard PLSS donning station attachment & pull downward on strap to maintain desired tension. Lie back in hammock.	
		4.15.1.19.2 Stow Sleep Station	
CDR		1. Climb out of hammock & detach all straps.	
		2. Place all straps on hammock & roll up hammock.	
LMP		3. Climb out of hammock & detach center support straps & the attach straps on LMP side of cabin.	
		4. Place all straps on hammock & roll up hammock.	
CDR		5. Return to CDR flight station & stow CDR & LMP hammocks.	

CREW-MAN	PNL	PROCEDURES	REMARKS
		4.15.1.16.2 Feedwater Reservoir and Auxiliary Tank Recharge, Gravity Environment (cont)	
	8	23. HTR CONT: URINE LINE sw - OFF	
	11	24. CB HTR: URINE LINE - open	
		4.15.1.17 Raise EVA Antenna	
		1. Move to aft cabin bay.	
		2. Grasp EVA antenna T-handle.	
		CAUTION Rotate handle slowly to prevent vertical overshoot.	
		3. Pull down & rotate handle to detent; release handle.	Full travel of handle rotation is approximately 225°. Direction of turn is counterclockwise.
		4.15.1.18 Stow EVA Antenna	
		1. Move to aft cabin bay.	
		2. Grasp EVA antenna T handle.	
		3. Pull down & rotate handle to detent; release handle.	Full travel of handle rotation is approximately 225°. Direction of turn is clockwise.
		4.15.1.19 Sleep Station	
		4.15.1.19.1 Deploy Sleep Station	
		1. Install sun filter on AOT.	To prevent earthshine through telescope.
CDR		2. Unstow midsection hammock from stowage at CDR station, & move to aft equipment bay. Route umbilicals behind PGA, if required.	
LMP		3. Unroll LMP hammock from CDR side of crew compartment & loosely attach hammock straps to hammock fittings at LMP flight station. Adjust tension on straps at CDR station for desired hammock height.	

CREW-MAN	PNL	PROCEDURES	REMARKS
		4.15.1.16.2 Feedwater Reservoir and Auxiliary Tank Recharge, Gravity Environment (cont)	
	ECS	11. DES H2O vlv - OPEN	
		12. DES H2O vlv - CLOSE	
		13. Disconnect urine transfer hose from PLSS primary water tank vent fitting & connect to PLSS auxiliary water tank vent fitting.	
		NOTE Water is initially observed in vent flow indicator due to previous entrapment of water in vent tube. As gas is vented, water is no longer observed. Water is again observed when gas is completely vented and auxiliary tank is full. If water does not disappear within 10 sec after DES H2O vlv - OPEN, there is no gas in auxiliary tank. Proceed to next step of procedure.	
	ECS	14. DES H2O vlv - OPEN	
		15. DES H2O vlv - CLOSE	
		16. Disconnect urine transfer hose from PLSS auxiliary water tank vent fitting & stow.	
		17. DES H2O vlv - OPEN for 5 to 10 sec, then CLOSE	Step 17 tops off PLSS water tanks.
	PLSS	18. PLSS AUX H2O SHUTOFF AND RELIEF vlv - CLOSE	
		19. Disconnect all hoses & install dust caps.	
		20. Secure PLSS.	
		21. Reconnect water dispenser to water recharge hose & stow.	
	ECS	22. DES H2O vlv - OPEN	

CREW-MAN	PNL	PROCEDURES	REMARKS
		4.15.1.16.2 Feedwater Reservoir and Auxiliary Tank Recharge, Gravity Environment (cont)	
	PLSS	2. Open PLSS thermal insulation flap & access door to expose H20 fill & drain fittings & vent fitting.	
		3. Unstow urine transfer hose & connect to PLSS H20 drain fitting.	
	ECS	4. DES H20 vlv - CLOSE	
		5. Unstow water recharge hose & disconnect from water dispenser.	
	PLSS	6. Connect hose to PLSS H20 fill fitting.	
	ECS	7. DES H20 vlv - OPEN	
		NOTE During recharge, flow may be verified by observing intermittent bubbles in urine transfer hose flow indicator.	
		8. Charge for minimum of 5 minutes.	Time required to fill PLSS feedwater bladder.
		9. DES H20 vlv - CLOSE	
		10. Disconnect urine transfer hose from PLSS H20 drain fitting & connect hose to PLSS primary tank vent fitting.	
		NOTE Water is initially observed in vent flow indicator due to previous entrapment of water in vent tube. As gas is vented, water is no longer observed. Water is again observed when gas is completely vented and feedwater bladder is full. If water does not disappear within 10 sec after DES H20 vlv - OPEN, there is no gas in feedwater bladder. Proceed to next step of procedure.	

LM 9

CREW-MAN	PNL	PROCEDURES	REMARKS
		4.15.1.16.1 Oxygen Recharge (cont)	
		3. Unstow LM O2 recharge hose.	
		4. Verify: LM O2 recharge hose connected to HI PRESS QD. or LM O2 recharge hose connected to LO PRESS QD.	HI PRESS QD is to be used as nominal mode. LO PRESS QD is to be used as back-up or contingency mode only.
		5. Remove dust cap & connect LM O2 recharge hose to PLSS O2 fill fitting.	
	+Z27 ECS	6. HI PLSS O2 FILL vlv - OPEN or LO PLSS FILL vlv - OPEN	LO PLSS valve will provide 57% charge to PLSS tank if descent oxygen quantity >35%.
		7. Charge as required	While charging with oxygen, crewman may proceed to Feedwater Reservoir Recharge procedure (para 4.15.1.16.2).
	+Z27 ECS	8. HI PLSS O2 FILL vlv - CLOSE or LO PLSS FILL vlv - CLOSE	LO PLSS valve will provide 57% charge to PLSS tank if descent oxygen quantity >35%.
		9. Disconnect LM O2 recharge hose from PLSS O2 fill fitting.	
		10. Replace dust caps on fill fitting & hose.	
		11. Stow LM O2 recharge hose.	
		12. Close PLSS O2 access door & thermal insulation flap.	
		4.15.1.16.2 Feedwater Reservoir and Auxiliary Tank Recharge, Gravity Environment	Assumptions: (1) PLSS AUX H2O SHUTOFF AND RELIEF vlv - OPEN, (2) PLSS may be mounted in recharge station or on ascent engine cover, (3) PLSS PRIMARY H2O SHUTOFF AND RELIEF vlv - CLOSE, and (4) all dust caps are tethered, and removed as required.
	11 8	1. Five min before transfer of PLSS condensate: CB HTR: URINE LINE - close HTR CONT: URINE LINE sw - HTR 1	

CREW-MAN	PNL	PROCEDURES	REMARKS
		4.15.1.14 Cooling H2O Changeover, PLSS H2O to LM H2O (LCG)	
		1. Loosen torso tiedown.	
	RCU	2. PUMP sw - OFF	
		3. Disconnect PLSS H2O connector from PGA.	
		4. Connect LM LCG H2O connector to PGA.	This should be performed by other crewman. PGA connector may inadvertently lock, in which case it must be unlocked before LCG H2O connector engagement.
	16	5. CB ECS: LCG PUMP - close	
		4.15.1.15 Cooling H2O Changeover, LM H2O (LCG) to PLSS H2O	
	16	1. CB ECS: LCG PUMP - open	
		2. Disconnect LM LCG H2O connector from PGA.	
		3. Connect PLSS H2O connector to PGA.	
	RCU	4. PUMP sw - ON	
		5. Tighten torso tiedown as desired.	
		4.15.1.16 PLSS Recharge	Assumptions: (1) CDR and LMP are in their respective flight stations, (2) either crewman may perform all or any part of recharge procedures, (3) PLSS may be in donning station or on ascent engine cover, and (4) PLSS control unit is electrically connected to PLSS.
		GFE/CFE procedures (PLSS battery and LiOH cartridge replacement procedures) are not supplied in LM AOH.	
		4.15.1.16.1 Oxygen Recharge	Assumptions: (1) PLSS may be mounted in recharge station or on ascent engine cover, (2) PRIM O2 SHUTOFF vlv - OFF (fwd), (3) HI PLSS O2 FILL vlv - CLOSE, (4) LO PLSS FILL vlv - CLOSE, and (5) all dust caps are tethered.
	2	1. ECS: O2 QUANTITY ind - >56% (descent tank 2)	PLSS cannot be fully charged with oxygen if quantity <56%.
		2. Open PLSS thermal insulation flap & access door to expose O2 fill fitting. Remove dust cap.	

LM 2007, LM 3215

CREW-MAN	PNL	PROCEDURES	REMARKS
		4.15.1.13 Post-EVA Final Subsystems Configuration (cont)	
		2. Verify EPS Basic (Unstaged)	Ref para 4.13.4.1.
		3. Verify Communications Basic.	Ref para 4.13.2.1. This verification may be performed simply by verifying voice and telemetry reception by MSFN.
CDR	11	4. CB S/C: ATT DIR CONT - open	
	8	5. ED: MASTER ARM sw - OFF STAGE sw - SAFE	
	1	6. ENG THR CONT: ENG ARM sw - OFF	
	3	7. S/C: PGNS sw - OFF	

CREW-MAN	PNL	PROCEDURES	REMARKS
		4.15.2.6 Lunar Launch Contingency Stowage (cont) 2. Post-EVA 2 PLSS (1) - recharge station ECS LiOH - jettison bag OPS (1) - upper SRC rack SRC - lower SRC rack RCU (2) - ISA PLSS batteries (2) - jettison bag PLSS LiOH (2) - jettison bag Lunar overshoes - jettison bag Stero cassette - RHSSC Jettison bag - ISA TSB - ISA ISA - aft bay rest station fittings HSB (2) - ascent engine cover PLSS (1) - upside down in donning station OPS (1) - cabin floor 3. Post-EVA 3 PLSS (1) - recharge station ECS LiOH - jettison bag SRC - upper SRC rack RCU (2) - ISA PLSS batteries (2) - jettison bag PLSS LiOH - jettison bag Lunar overshoes - jettison bag Cosmic ray detector - lower LHMSSC Jettison bag - ISA TSB - ISA ISA - aft bay rest station fittings HSB (2) - ascent engine cover PLSS (1) - upside down in donning station OPS (2) - cabin floor	

5.2.2 PRIMARY GUIDANCE & NAVIGATION SECTION

Table 5-2. PGNS Procedure Entry Sheet

Symptom	Sym No.	Page No.
TRACKER lt	1	5.2-8
ISS warn lt	2	5.2-8
TEMP lt	3	5.2-9
GIMBAL LOCK lt	4	5.2-9
LGC warn lt	5	5.2-9
RESTART lt	5a	5.2-9
ALT lt	6	5.2-10
VEL lt	7	5.2-10
RNDZ RDR caut lt	8	5.2-11
NO TRACK lt	8a	5.2-11
LGC test	SSR-1	5.2-12

SYMPTOM	PROCEDURE	REMARKS

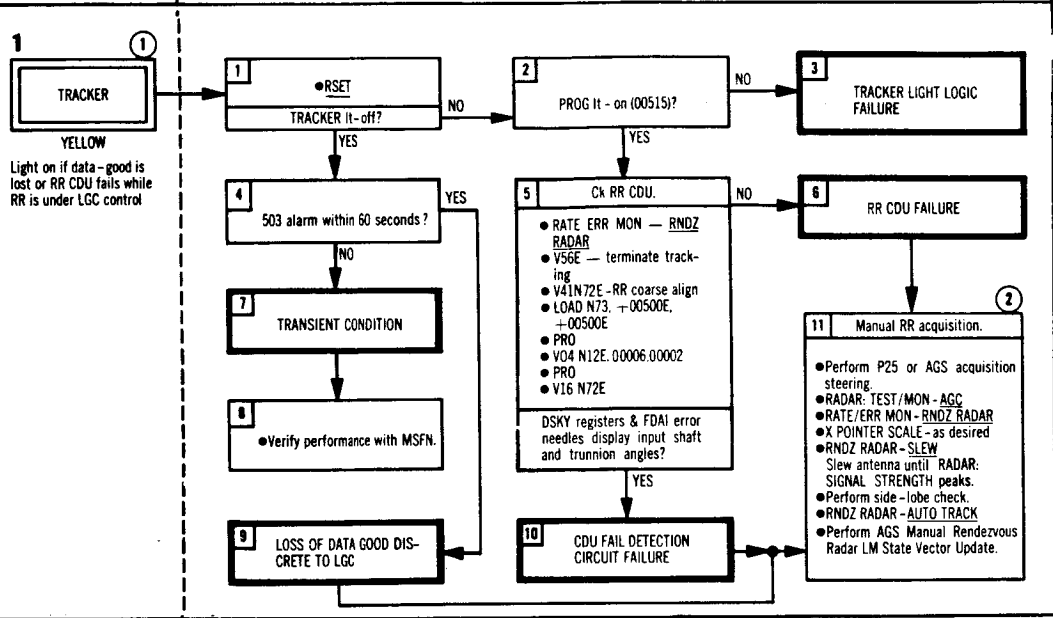

(1) NO TRACK lt may also be on, but does not represent malfunction if lock-on has not been achieved.

(2) Occurs without NO TRACK lt. LGC will not process RR data.

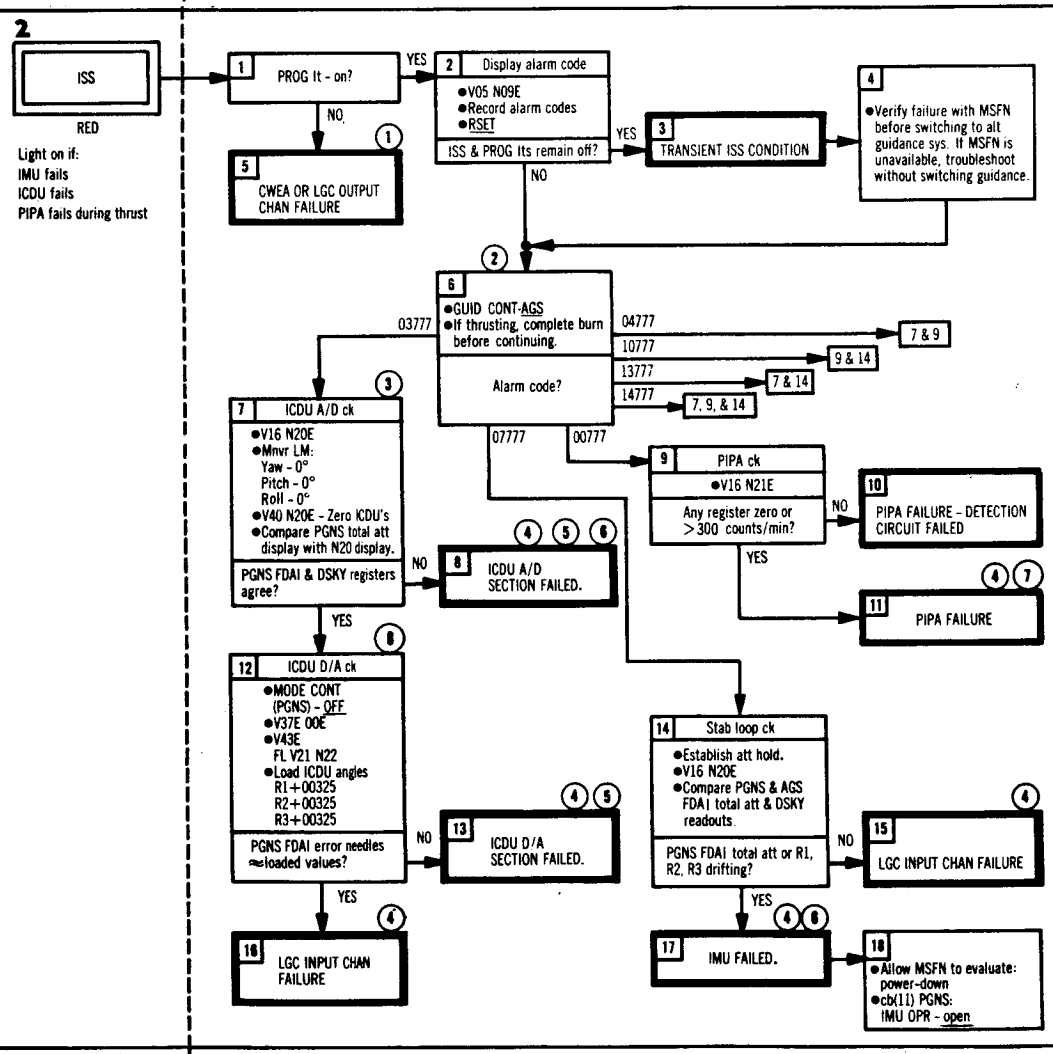

(1) Subsequent ISS malfunction indications lost.

(2) Following alarm codes are generated by listed failures:
04777 - PIPA and ICDU failure
10777 - PIPA and IMU failure
13777 - IMU and ICDU failure
14777 - PIPA, IMU, and ICDU failure
If any of these alarm codes occur, proceed sequentially to each of steps listed. A "NO" answer to each step indicates that transient discrete was generated.

(3) Alarm may blank N20 display. If so, reset alarm and key V16 N20E for comparison with total attitude display.

(4) cb (11) S/C: AEA - close

(5)

Function Remaining	A/D Failure	D/A Failure
Fine align	NO	YES
Coarse align	NO	NO
Att error signal	NO	NO
Total att to FDAI	YES	YES
Gimbal angles to LGC	NO	YES
IMU stab loop	YES	YES
Cage mode	YES	YES
IMU failure-detection circuit	YES	YES
Coarse align in gimbal lock	NO	YES

(6) LGC can perform functions not requiring IMU inputs. After each thrusting maneuver, state vectors must be updated via P27.

(7) LGC monitoring and control of thrusting lost.

(8) Switch guard may be moved to side position for duration of time S/C: PGNS sw - OFF.

E-300LM5-1024

SYMPTOM	PROCEDURE	REMARKS

SYMPTOM	PROCEDURE	REMARKS

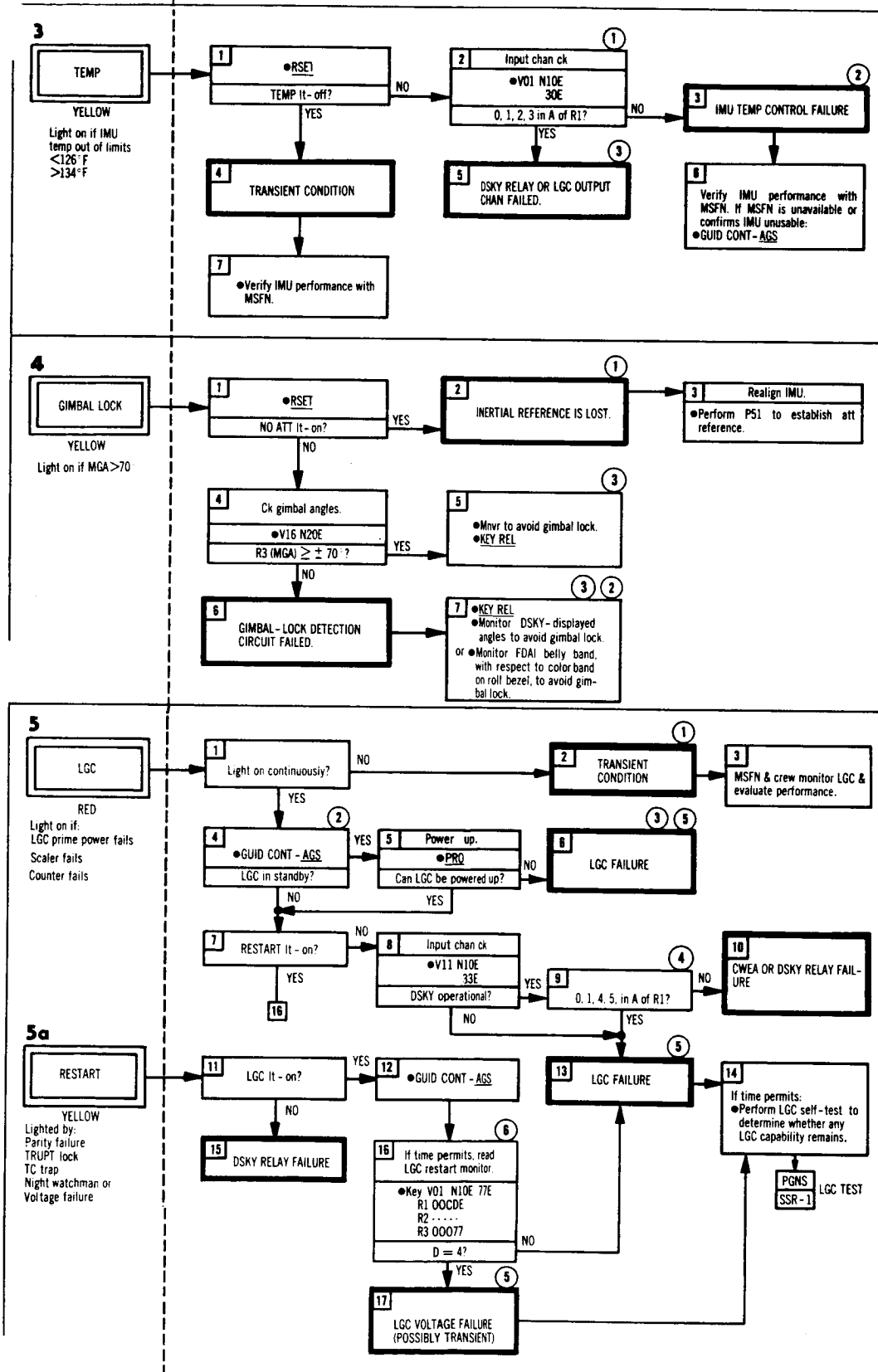

REMARKS

1. R1 readout of 0, 1, 2, 3 indicates IMU temperature is within limits.
2. GN & CS performance will be unaffected by IMU out-of-tolerance temperature for at least 15 minutes. Critical maneuvers can be conducted within this time. IMU stab loop and velocity measurements will be degraded after this time.
3. Subsequent IMU out-of-tolerance temperature indications are lost.

1. LGC commands coarse align when MGA ≥ 85°.
2. GIMBAL LOCK lt unusable for monitoring.
3. Belly band covers separation between hemispheres of FDAI ball. Belly band, in color bands on each side of FDAI roll bezel, would indicate IMU middle gimbal angle ≥ 75°.

1. Transient condition could have existed either in LGC or CWEA.
2. DSKY relay that turns on LGC lt disables gyro torquing and PIPA capability. Hence, LGC monitoring and control of both TVC and RCS attitude maneuvers lost.
3. Attempt repowering LGC by opening and reclosing cb (11) PGNS: LGC/DSKY.
4. Readout of 0, 1, 4, 5 indicates LGC fail signal to CWEA.
5. cb (11) S/C: AEA - close
6.

Alarm Source	Channel 77 Code (Octal)
*Parity fail (F—memory)	001
*Parity fail (E—memory)	003
TC trap	004
RUPT lock	010
Night watchman	020
Voltage fail	040
Counter fail	100
Scaler fail	200
Scaler double frequency alarm	400
*Allowable combinations of above alarms	Octal sum of above codes

*Parity fail will either be in E—memory or F—memory, but not in combination.

A-300LM5-1017

SYMPTOM	PROCEDURE	REMARKS

SYMPTOM	PROCEDURE	REMARKS

6 (1) ALT — YELLOW

Light on steady if:
LR range data-good discrete not present when LGC tries to read LR altitude (R20)
Expected at:
High altitudes
Off-nominal attitudes (including "belly down")
Zero Doppler
Light flashing if:
LR altitude reasonableness test failed below high-gate (R12)
Expected at:
Lurain discontinuities
Zero Doppler

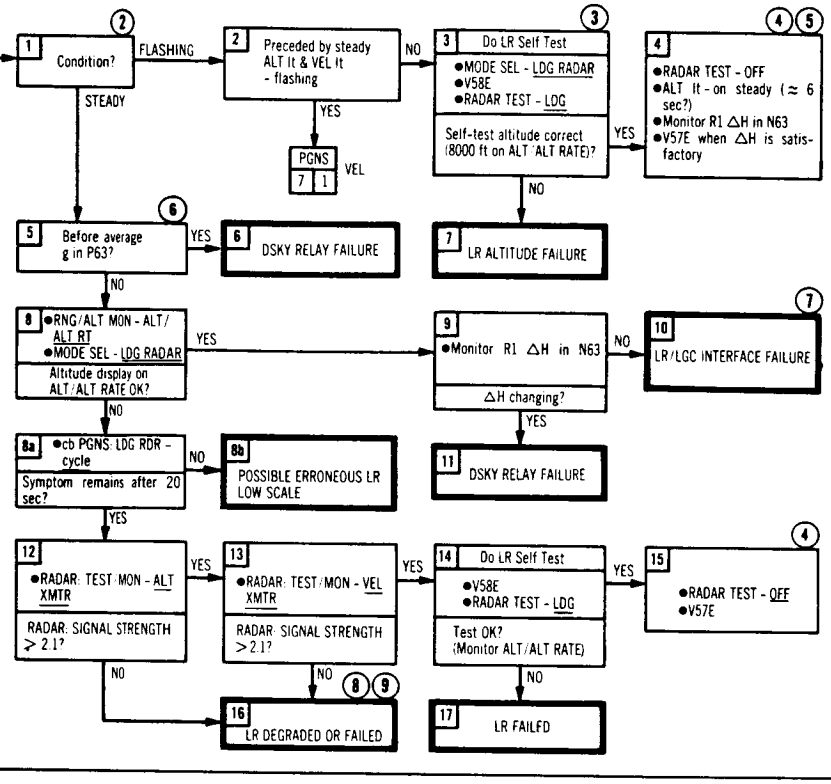

(1) Expected zero Doppler region
LR antenna position No. 1 - about 7000 to 5000 feet
LR antenna position No. 2 - about 350 to 150 feet

(2) Altitude reasonabeleness test is performed only after high gate.

(3) Time limitations below high gate may not permit test.

(4) LR self-test cannot determine cause. Symptom may be temporary due to causes such as those listed in SYMPTOM column.

(5) Possible data interface failure.

(6) Assumption: R04 is not running.

(7) Capability of updating LGC with LR data is lost.

(8) If transmitter corona is suspect, cb PGNS: LDG RDR - cycle.

(9) If transmitter power, or receiver sensitivity for beams No. 1, 2, or 4, is degraded, altitude data-good may be late.

7 (1) VEL — YELLOW

Light on steady if:
LR velocity data-good discrete not present when LGC tries to read LR velocity (R20)
Expected at:
High altitudes
Off-nominal attitudes (including "belly down")
Zero Doppler
Light on flashing if:
LR velocity reasonableness tests failed (R12)
Expected at:
Lurain discontinuity
Near-zero Doppler
LR antenna stuck between positions (at higher altitudes)

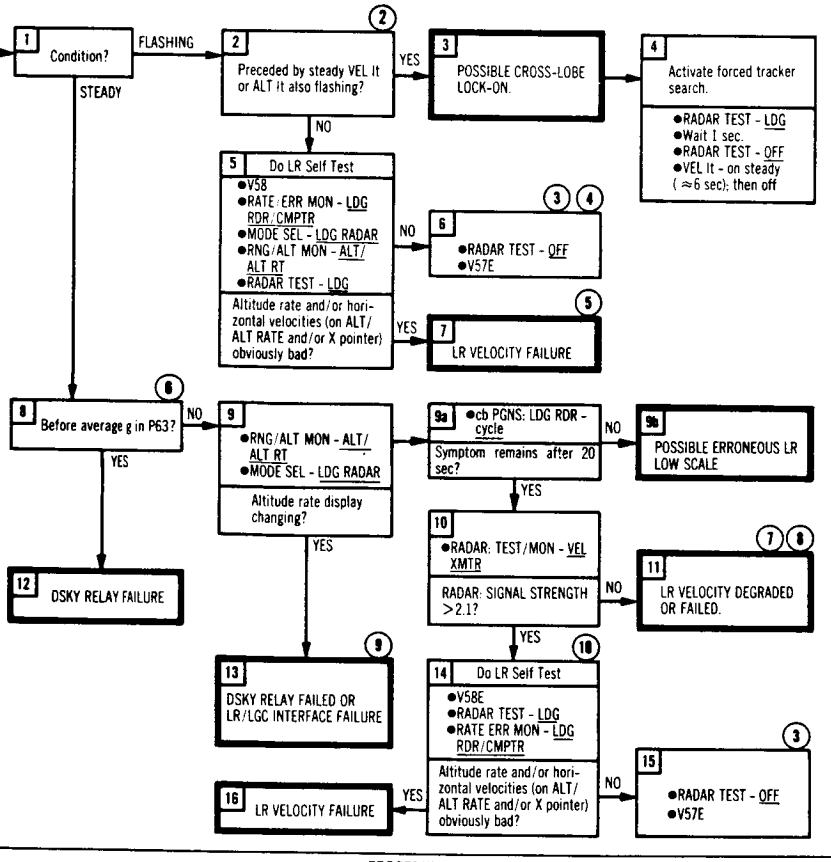

(1) Expected zero Doppler regions:
LR antenna position No. 1 - about 7000 to 5000 feet
LR antenna position No. 2 - about 350 to 150 feet

(2) Velocity reasonableness test is performed when velocity <6000 fps (all the time).

(3) LR self-test cannot determine cause. Symptom may be temporary due to causes such as those listed in SYMPTOM column.

(4) Possible data interface failure.

(5) Possible impact on ability to use altitude data.

(6) Assumption: R04 is not running.

(7) If transmitter power, or receiver sensitivity for beam No. 1, 2, or 3 is degraded, velocity data-good may be late. If beam No. 1 and/or 2 is affected, altitude data will also be late.

(8) If transmitter corona is suspect, cb PGNS: LDG RDR - cycle.

(9) There is no onboard capability for distinguishing between failures. Continue and monitor other data sources. If data-good -discrete interface failed, LR data are not processed.

(10) Unless results are obvious, test is inconclusive without report of downlink from MSFN.

C-300LM5-104

SYMPTOM	PROCEDURE	REMARKS

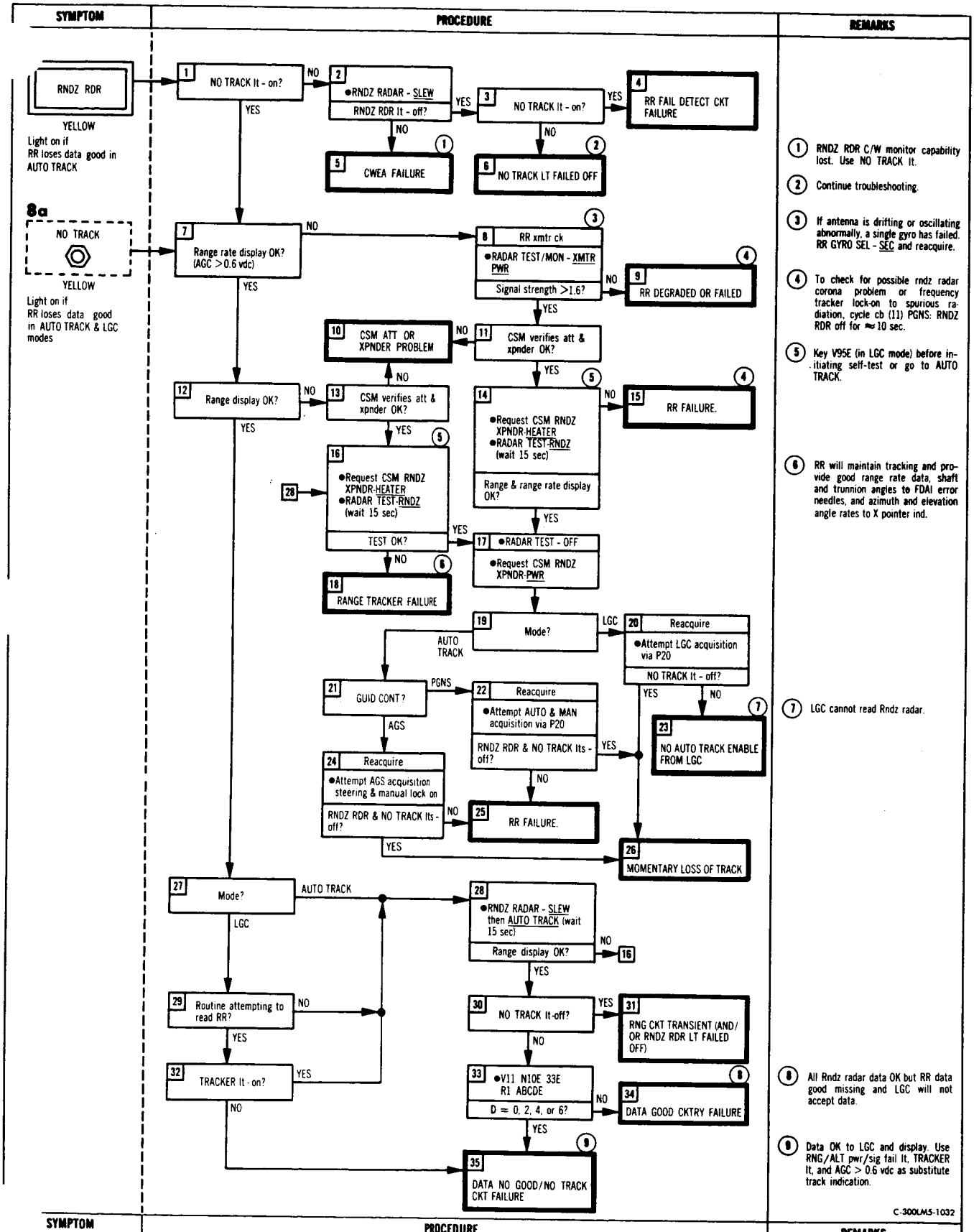
SYMPTOM
PROCEDURE
REMARKS
RNDZ RDR
YELLOW
Light on if RR loses data good in AUTO TRACK
8a
NO TRACK
YELLOW
Light on if RR loses data good in AUTO TRACK & LGC modes
1 NO TRACK lt - on?
2 •RNDZ RADAR - SLEW
RNDZ RDR lt - off?
3 NO TRACK lt - on?
4 RR FAIL DETECT CKT FAILURE
5 CWEA FAILURE
6 NO TRACK LT FAILED OFF
7 Range rate display OK? (AGC >0.6 vdc)
8 RR xmtr ck
•RADAR TEST/MON - XMTR PWR
Signal strength >1.6?
9 RR DEGRADED OR FAILED
10 CSM ATT OR XPNDER PROBLEM
11 CSM verifies att & xpnder OK?
12 Range display OK?
13 CSM verifies att & xpnder OK?
14 •Request CSM RNDZ XPNDR-HEATER
•RADAR TEST-RNDZ (wait 15 sec)
Range & range rate display OK?
15 RR FAILURE.
16 •Request CSM RNDZ XPNDR-HEATER
•RADAR TEST-RNDZ (wait 15 sec)
TEST OK?
17 •RADAR TEST - OFF
•Request CSM RNDZ XPNDR-PWR
18 RANGE TRACKER FAILURE
19 Mode?
20 Reacquire
•Attempt LGC acquisition via P20
NO TRACK lt - off?
21 GUID CONT?
22 Reacquire
•Attempt AUTO & MAN acquisition via P20
RNDZ RDR & NO TRACK lts - off?
23 NO AUTO TRACK ENABLE FROM LGC
24 Reacquire
•Attempt AGS acquisition steering & manual lock on
RNDZ RDR & NO TRACK lts - off?
25 RR FAILURE.
26 MOMENTARY LOSS OF TRACK
27 Mode?
28 •RNDZ RADAR - SLEW then AUTO TRACK (wait 15 sec)
Range display OK?
29 Routine attempting to read RR?
30 NO TRACK lt-off?
31 RNG CKT TRANSIENT (AND/OR RNDZ RDR LT FAILED OFF)
32 TRACKER lt - on?
33 •V11 N10E 33E R1 ABCDE
D = 0, 2, 4, or 6?
34 DATA GOOD CKTRY FAILURE
35 DATA NO GOOD/NO TRACK CKT FAILURE
YES
NO
AUTO TRACK
LGC
PGNS
AGS
1 RNDZ RDR C/W monitor capability lost. Use NO TRACK lt.
2 Continue troubleshooting.
3 If antenna is drifting or oscillating abnormally, a single gyro has failed. RR GYRO SEL - SEC and reacquire.
4 To check for possible rndz radar corona problem or frequency tracker lock-on to spurious radiation, cycle cb (11) PGNS: RNDZ RDR off for ≈10 sec.
5 Key V95E (in LGC mode) before initiating self-test or go to AUTO TRACK.
6 RR will maintain tracking and provide good range rate data, shaft and trunnion angles to FDAI error needles, and azimuth and elevation angle rates to X pointer ind.
7 LGC cannot read Rndz radar.
8 All Rndz radar data OK but RR data good missing and LGC will not accept data.
9 Data OK to LGC and display. Use RNG/ALT pwr/sig fail lt, TRACKER lt, and AGC > 0.6 vdc as substitute track indication.
C-300LM5-1032

SPECIAL SUBROUTINE	PROCEDURE	REMARKS

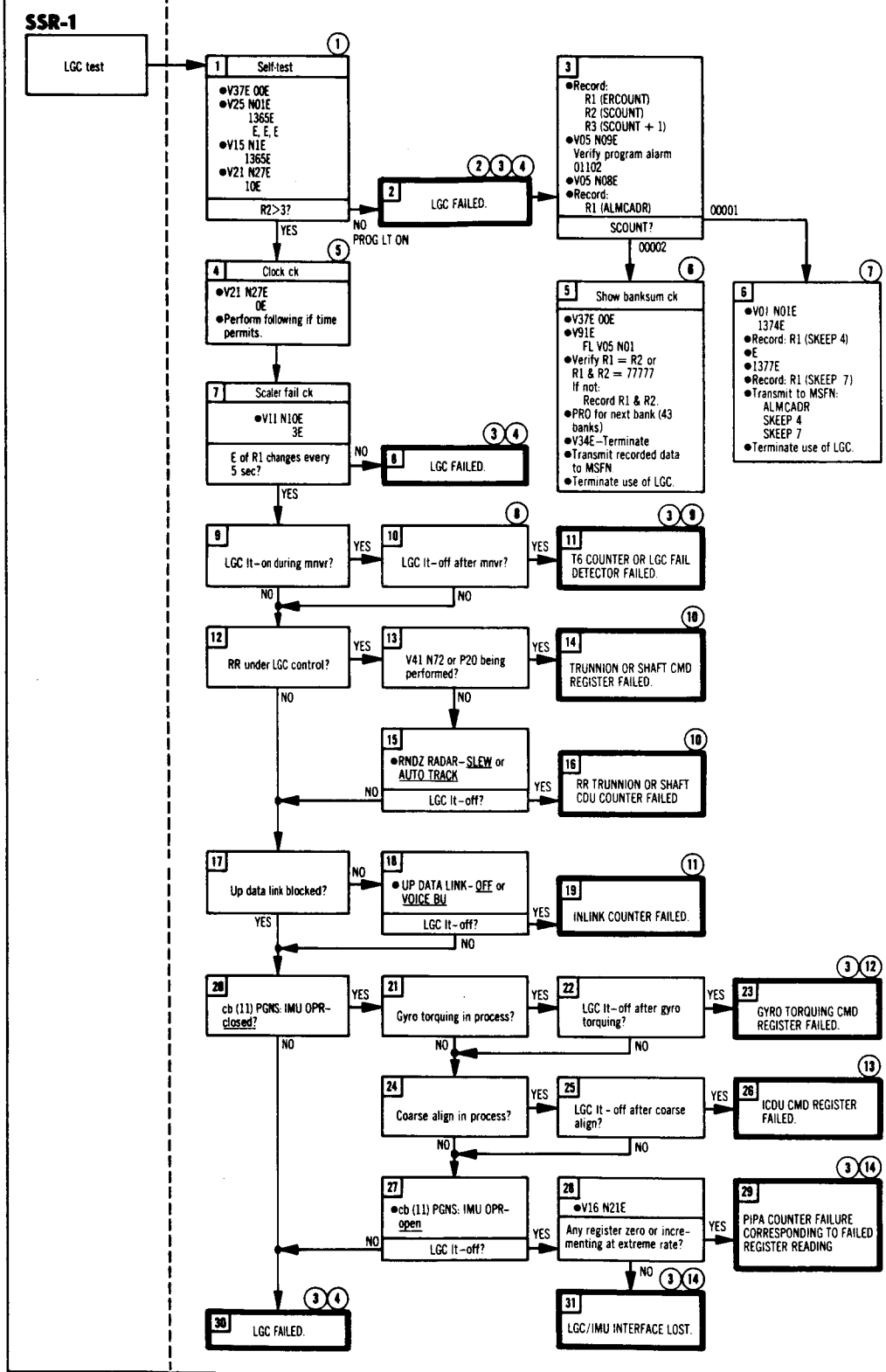

(1) R2 = 00001 for at least 13 seconds
R2 = 00002 for at least 52 seconds

(2) Subsequent use of LGC depends upon MSFN evaluation of succeeding steps in self-test.

(3) cb (11) S/C: AEA - close

(4) All LGC functions lost.

(5) LGC self-test checks only erasable and fixed memory. Other internal problems cannot be determined by self-test.

(6) Problem is in erasable memory.

(7) Problem is in fixed memory.

(8) Do not use LGC control for attitude maneuvers.

(9) RCS DAP unusable because T6 counter controls set firing times.

(10) LGC control of RR lost.

(11) LGC uplink lost

(12) IMU cannot be fine aligned.

(13) IMU cannot be coarse aligned. Align by caging and/or fine align.

(14) IMU usable as attitude reference only.

B-300LM5-1020

SPECIAL SUBROUTINE	PROCEDURE	REMARKS

5.2.3 ABORT GUIDANCE SECTION

Table 5-3. AGS Procedure Entry Sheet

Symptom	Sym No.	Page No.
AGS warn lt	1	5.2-14
DEDA response abnormal	2	5.2-14

SYMPTOM	PROCEDURE	REMARKS

1

AGS

RED

Light on if:

ASA power supplies out of tolerance

ASA heater fails on (activated at 150° ± 5°F)

AEA fails to complete minor cycle within 20 milliseconds

AEA test mode discrete signals failure condition

Light latches on when AEA failure is detected. O_2/H_2O QTY MON must be set to C/W RESET position to unlatch.

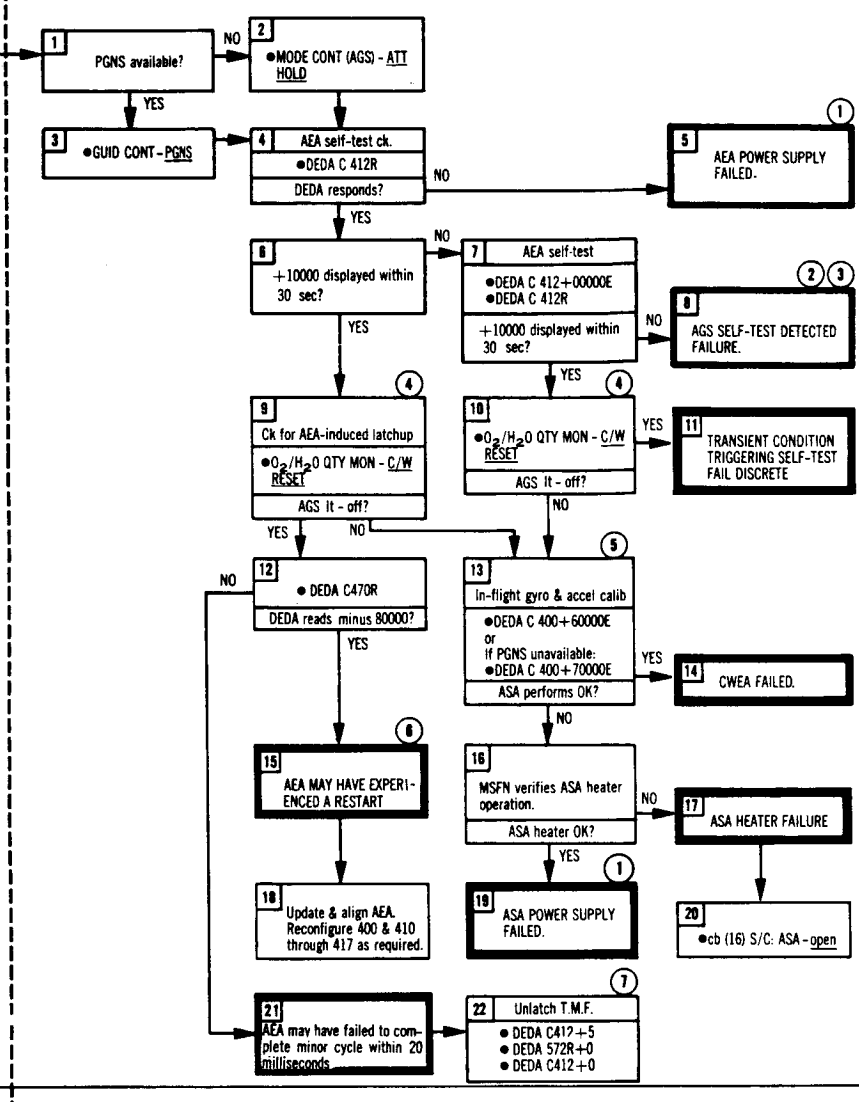

(1) AGS lost.

(2) AGS self-test status
412+ X0000
X = 0 Test not complete
X = 1 Test successful
X = 3 Logic test failure
X = 4 Memory test failure
X = 7 Logic and memory test failure

(3) AGS operations not recommended.

(4) O_2/H_2O QTY MON performs latch-up release when set to C/W RESET.

(5) For PGNS unavailable: C 400+70000 checks accelerometers only.

(6) AEA restart changes: 470 to - 80000, 400 and 410 through 417 to + 00000, 470 is incremented by accumulated ΔV_X from an initial value at AEA start-up of - 8000.0 fps.

(7) Test Mode Fail (T.M.F.) must be reset to permit the appearance of the AGS warning light in the event of future AEA detected failures.

2

DEDA response abnormal

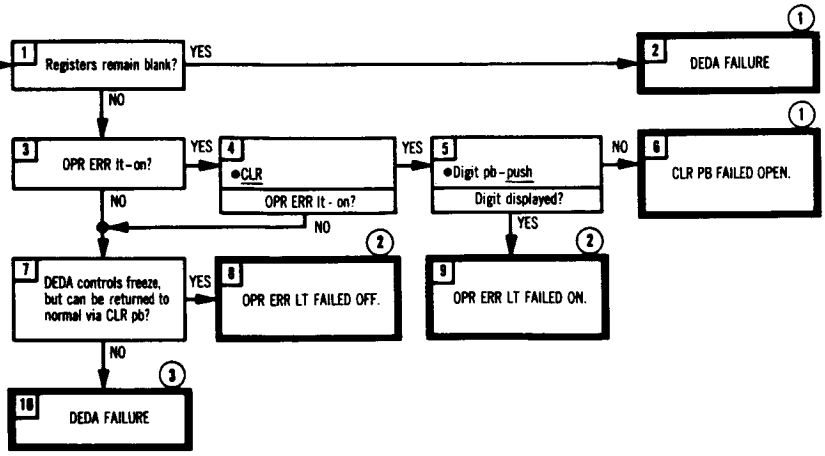

(1) Readout and enter functions are lost. AGS flight displays are available, but will become less and less reliable due to inability to be updated, aligned or calibrated.

(2) OPR ERR display lost.

(3) MSFN can confirm DEDA readouts.
a. For following failures, AGS/DEDA capability is unaffected:
EL segments
HOLD pb open
b. For following failure, readout and enter capability is lost:
CLR pb closed
Digit pb closed
ENTR pb closed
HOLD pb closed
READOUT pb closed
AGS flight displays are available, but will become less and less reliable due to inability to be updated, aligned, or calibrated.
c. The pb capability is lost for following failures:
Digit pb open
ENTR pb open*
+ or − pb open*
*AGS can no longer be aligned, updated, or calibrated. AEA routines via SXX entry are lost.

SYMPTOM	PROCEDURE	REMARKS

B-300LM5-1011

5.2.4 CONTROL ELECTRONICS SECTION

5.2.4.1 Abnormal Vehicle Dynamics

- Abnormal vehicle dynamics during coasting flight is defined as uncommanded vehicle acceleration by RCS, including limit cycling on edge of deadband. Abnormal vehicle dynamics during thrust includes unexpected acceleration or oscillation, or excessive RCS firing. Abnormal dynamics may not always be recognized on vehicle displays; it may be necessary to verify the symptom using other available cues.

Table 5-4. CES Procedure Entry Sheet

Symptom	Sym No.	Page No.
Abnormal vehicle dynamics (non-MPS)	1	5.2-16
LM drifts out of deadband	2	5.2-17
PGNS minimum impulse (V76) cmds abnormal	3	5.2-17
AGS pulse or direct cmds abnormal	4	5.2-18
Prop cmds abnormal	5	5.2-18
TTCA cmds abnormal	6	5.2-19
Abnormal Dynamics during MPS thrusting	7	5.2-19
ENG GMBL caut lt	8	5.2-20
No MPS shutdown	9	5.2-20
Premature MPS ignition	9a	5.2-20
No MPS ignition at TIG = 0	10	5.2-21
ENG THRUST & CMD THRUST ind do not agree/off schedule	11	5.2-21
PRE AMPS caut lt	12	5.2-22
CES AC warn lt	13	5.2-22
CES DC warn lt	14	5.2-22

SYMPTOM	PROCEDURE	REMARKS

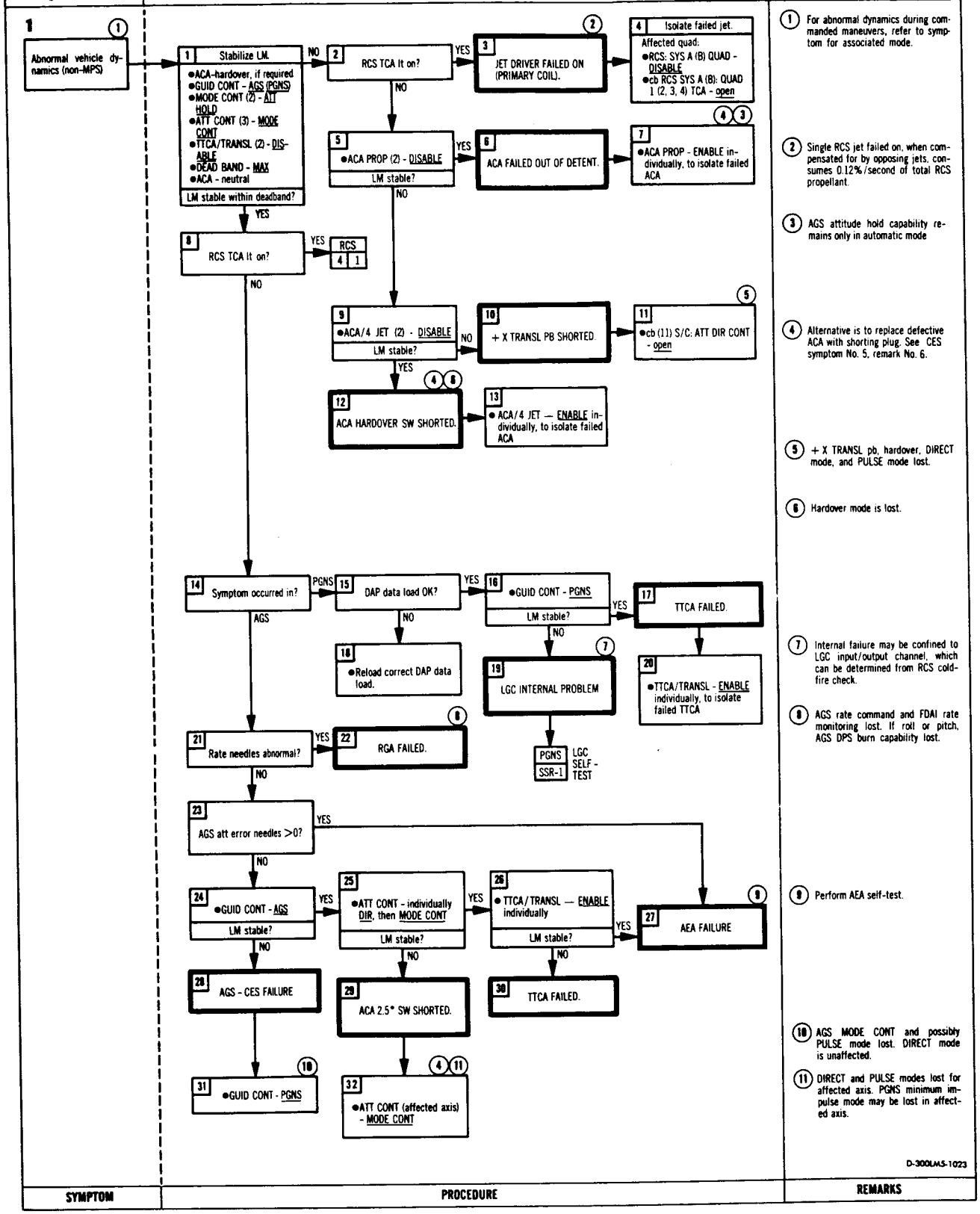

REMARKS

1. For abnormal dynamics during commanded maneuvers, refer to symptom for associated mode.
2. Single RCS jet failed on, when compensated for by opposing jets, consumes 0.12%/second of total RCS propellant.
3. AGS attitude hold capability remains only in automatic mode
4. Alternative is to replace defective ACA with shorting plug. See CES symptom No. 5, remark No. 6.
5. + X TRANSL pb, hardover, DIRECT mode, and PULSE mode lost.
6. Hardover mode is lost.
7. Internal failure may be confined to LGC input/output channel, which can be determined from RCS coldfire check.
8. AGS rate command and FDAI rate monitoring lost. If roll or pitch, AGS DPS burn capability lost.
9. Perform AEA self-test.
10. AGS MODE CONT and possibly PULSE mode lost. DIRECT mode is unaffected.
11. DIRECT and PULSE modes lost for affected axis. PGNS minimum impulse mode may be lost in affected axis.

D-300LM5-1023

SYMPTOM	PROCEDURE	REMARKS

SYMPTOM	PROCEDURE	REMARKS
2	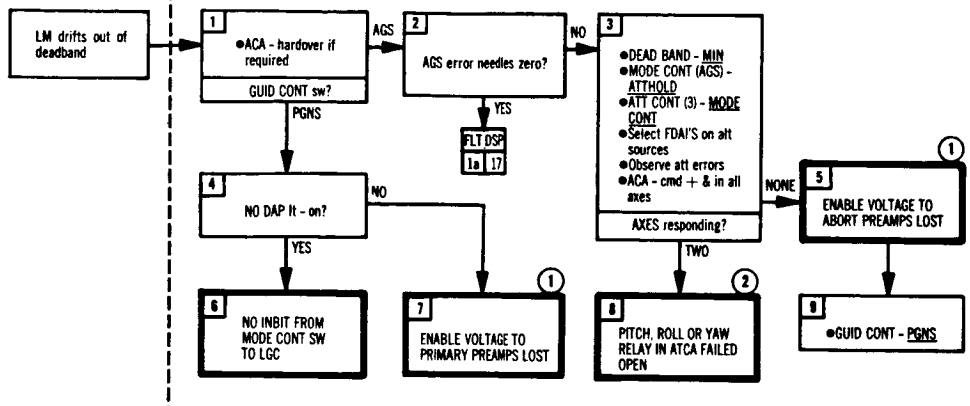	(1) RCS control lost for affected pos. of GUID CONT sw. If ATCA circuit breaker for associated guidance system opened, a return to that system for control is impossible. (2) Only AGS PULSE and DIRECT control are available in affected axis.
3	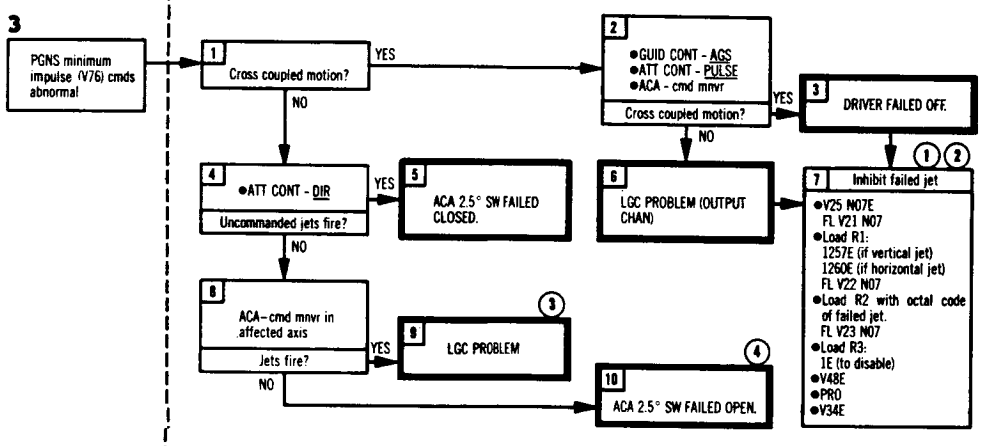	(1) Alternative procedure - Affected system: RCS: SYS (affected quad) - DISABLE: tb - bp Thruster disable discrete to LGC may be reset by recycling RCS: SYS (affected quad) - ENABLE: tb - gray (2) Octal code of failed jet: 1U - 100E | 4U - 1E 1D - 200E | 4D - 2E 1F - 4E | 4F - 2E 1L - 200E | 4R - 100E 2U - 20E | 3U - 4E 2D - 40E | 3D - 10E 2A - 10E | 3A - 1E 2I - 20E | 3R - 40E (3) If problem is in pitch or roll, LPD is lost. (4) LGC minimum impulse LPD, AGS PULSE, and one-half of DIRECT authority lost in one direction for affected ACA.
SYMPTOM	PROCEDURE	REMARKS

B-300LM5-1014

SYMPTOM	PROCEDURE	REMARKS

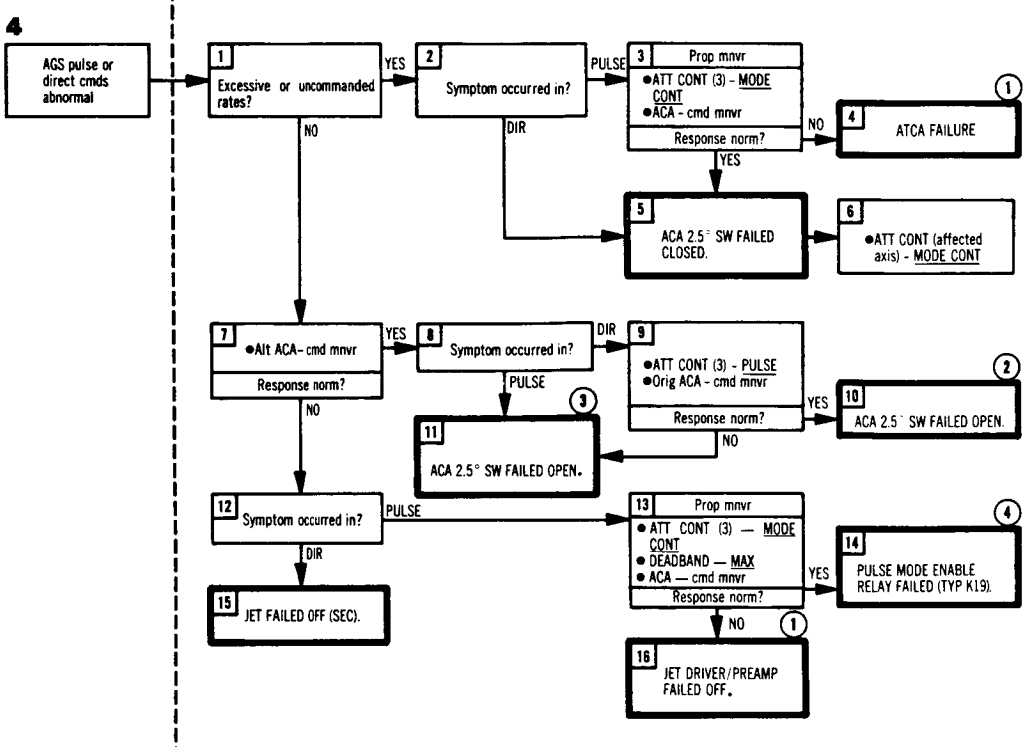

(1) Affected axis may be available in PGNS (if preamp failed).

(2) One-half of DIRECT authority lost in one direction for affected ACA.

(3) LGC minimum impulse LPD. AGS PULSE, and one-half of DIRECT authority lost in one direction for affected ACA.

(4) AGS PULSE mode lost for affected axis.

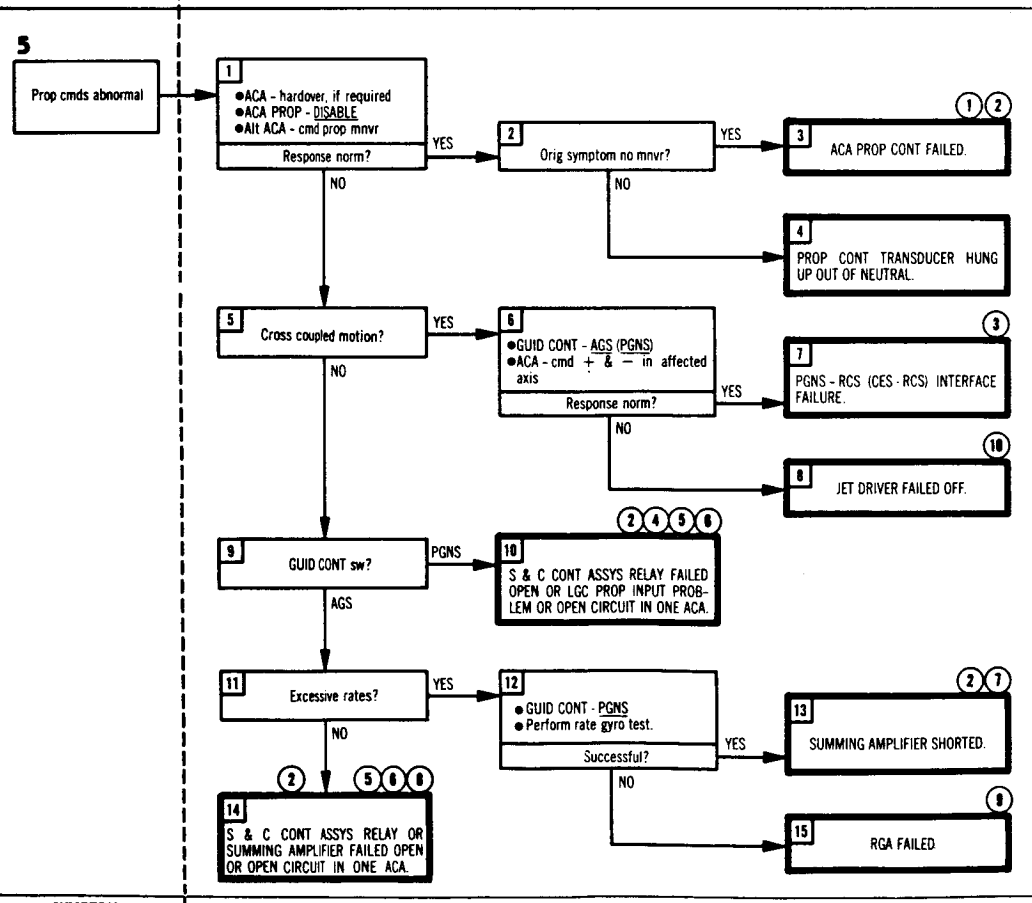

(1) Prop control lost for affected ACA.

(2) Failure may be single or multiaxi.

(3) Failure could be open LGC output channel, summing amplifier, pulse rate module, or preamplifier.

(4) Prop control lost for affected guidance system. DIRECT and PULSE control unaffected.

(5) If symptom is present in both guidance modes, malfunction may be open circuit in one ACA.

(6) To remove ACA and replace with shorting plug:
•cb (11) S/C:
ATT DIR CONT - open
ATCA (PGNS) - open
•cb (16) S/C: ATCA (AGS) - open
•cb (11) COMM: CDR - open (for CDR ACA)
or
cb (16) COMM: SE - open (for LMP ACA)
•ACA PROP (2) - DISABLE
•AUDIO CONT (2) - NORM
On suspected ACA:
•P & J 709 - disconnect
•P & J 708 - disconnect
•Install jumper plug on J 709.
•Install dust cap on J 708.
•Close above cb's & reconfigure switches.
Since vehicle attitude control is lost during switch over, use of this procedure during controlled flight is not recommended.

(7) PGNS and DIRECT control unaffected. PULSE control may be available in AGS.

(8) DIRECT control unaffected. Prop control may be OK in alternative guidance system.

(9) FDAI rate displays lost.

(10) If PGNS guidance desired, inhibit jet per CES 3, step 7.

C-300LM5-101

SYMPTOM	PROCEDURE	REMARKS

LM3260

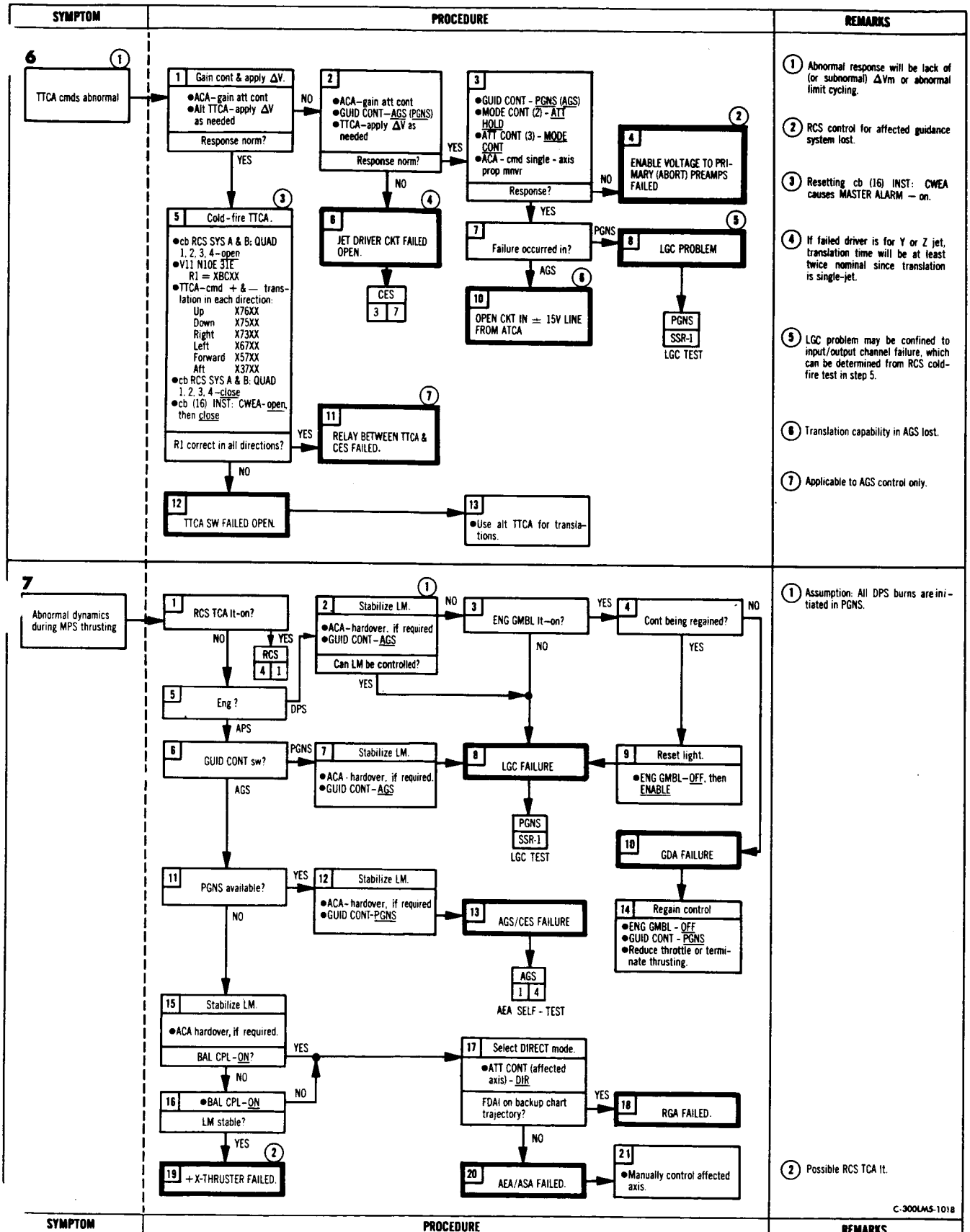
SYMPTOM
PROCEDURE
REMARKS
6
TTCA cmds abnormal
1 Gain cont & apply ΔV.
●ACA–gain att cont
●Alt TTCA–apply ΔV as needed
Response norm?
NO
YES
2
●ACA–gain att cont
●GUID CONT–AGS (PGNS)
●TTCA–apply ΔV as needed
Response norm?
YES
NO
3
●GUID CONT - PGNS (AGS)
●MODE CONT (2) - ATT HOLD
●ATT CONT (3) - MODE CONT
●ACA - cmd single - axis prop mnvr
Response?
NO
YES
4
ENABLE VOLTAGE TO PRIMARY (ABORT) PREAMPS FAILED
5 Cold-fire TTCA.
●cb RCS SYS A & B: QUAD 1, 2, 3, 4–open
●V11 N10E 31E
R1 = XBCXX
●TTCA–cmd + & — translation in each direction:
Up X76XX
Down X75XX
Right X73XX
Left X67XX
Forward X57XX
Aft X37XX
●cb RCS SYS A & B: QUAD 1, 2, 3, 4–close
●cb (16) INST: CWEA-open, then close
R1 correct in all directions?
YES
NO
6
JET DRIVER CKT FAILED OPEN.
CES
3 7
7
Failure occurred in?
PGNS
AGS
8
LGC PROBLEM
PGNS
SSR-1
LGC TEST
10
OPEN CKT IN ± 15V LINE FROM ATCA
11
RELAY BETWEEN TTCA & CES FAILED.
12
TTCA SW FAILED OPEN.
13
●Use alt TTCA for translations.
1 Abnormal response will be lack of (or subnormal) ΔVm or abnormal limit cycling.
2 RCS control for affected guidance system lost.
3 Resetting cb (16) INST: CWEA causes MASTER ALARM — on.
4 If failed driver is for Y or Z jet, translation time will be at least twice nominal since translation is single-jet.
5 LGC problem may be confined to input/output channel failure, which can be determined from RCS cold-fire test in step 5.
6 Translation capability in AGS lost.
7 Applicable to AGS control only.
7
Abnormal dynamics during MPS thrusting
1 RCS TCA lt-on?
NO
YES
RCS
4 1
2 Stabilize LM.
●ACA–hardover, if required
●GUID CONT–AGS
Can LM be controlled?
NO
YES
3 ENG GMBL lt–on?
YES
NO
4 Cont being regained?
NO
YES
5 Eng ?
DPS
APS
6 GUID CONT sw?
PGNS
AGS
7 Stabilize LM.
●ACA - hardover, if required.
●GUID CONT–AGS
8 LGC FAILURE
PGNS
SSR-1
LGC TEST
9 Reset light.
●ENG GMBL–OFF, then ENABLE
10 GDA FAILURE
11 PGNS available?
YES
NO
12 Stabilize LM.
●ACA–hardover, if required
●GUID CONT-PGNS
13 AGS/CES FAILURE
AGS
1 4
AEA SELF - TEST
14 Regain control
●ENG GMBL - OFF
●GUID CONT - PGNS
●Reduce throttle or terminate thrusting.
15 Stabilize LM.
●ACA hardover, if required.
BAL CPL-ON?
YES
NO
16 ●BAL CPL-ON
LM stable?
NO
YES
17 Select DIRECT mode.
●ATT CONT (affected axis) - DIR
FDAI on backup chart trajectory?
YES
NO
18 RGA FAILED.
19 +X-THRUSTER FAILED.
20 AEA/ASA FAILED.
21
●Manually control affected axis.
1 Assumption: All DPS burns are initiated in PGNS.
2 Possible RCS TCA lt.
C-300LMS-1018
SYMPTOM
PROCEDURE
REMARKS

LM3256

SYMPTOM	PROCEDURE	REMARKS

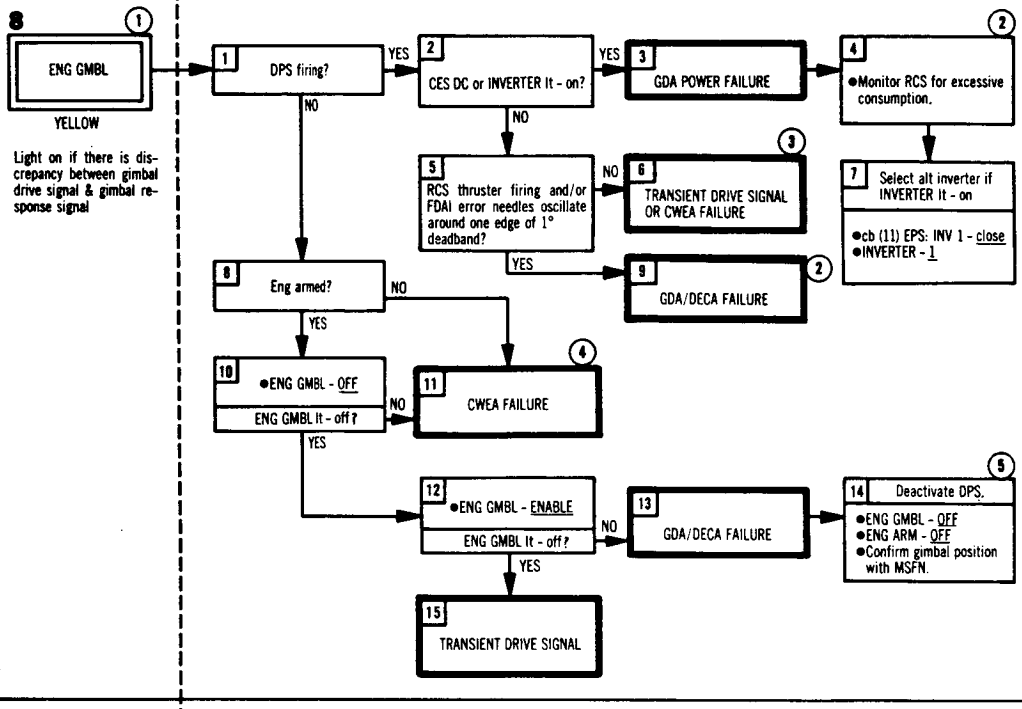

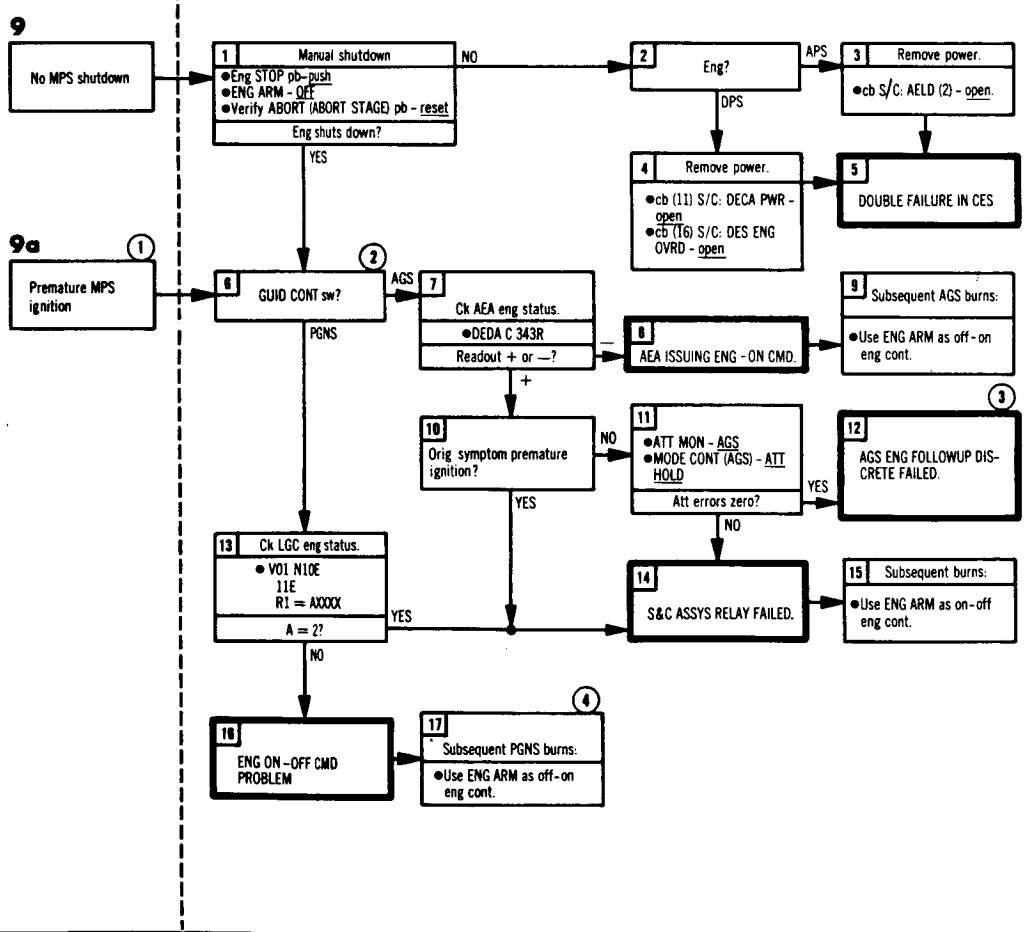

REMARKS

1. Light is inhibited when ENG ARM - OFF.
2. Mission rules dictate crew action. Continuation of powered descent will result in abnormal RCS fuel consumption and possible violation of thermal constraints.
3. It is possible to distinguish between these failures by resetting ENG GMBL lt. (ENG GMBL - OFF, then ENABLE.)
4. C/W monitoring of GDA lost.
5. It may be possible to reset gimbal position, using alternative guidance system and MSFN information.

1. Assumption: Burn was terminated on premature ignition (except during lunar ascent). Whether crew will reattempt burn at TIG will be mission rule.
2. Failure of MPS to shut down automatically will also result from failure of cb (16) S/C: ENG ARM. If this circuit breaker is open, manual starts and stops will be required for subsequent burns. Delay arming engine until TIG.
3. AGS attitude hold and automatic on - off capability lost.
4. AGS - controlled burns unaffected.

B-300LM5-102

SYMPTOM	PROCEDURE	REMARKS

SYMPTOM	PROCEDURE	REMARKS

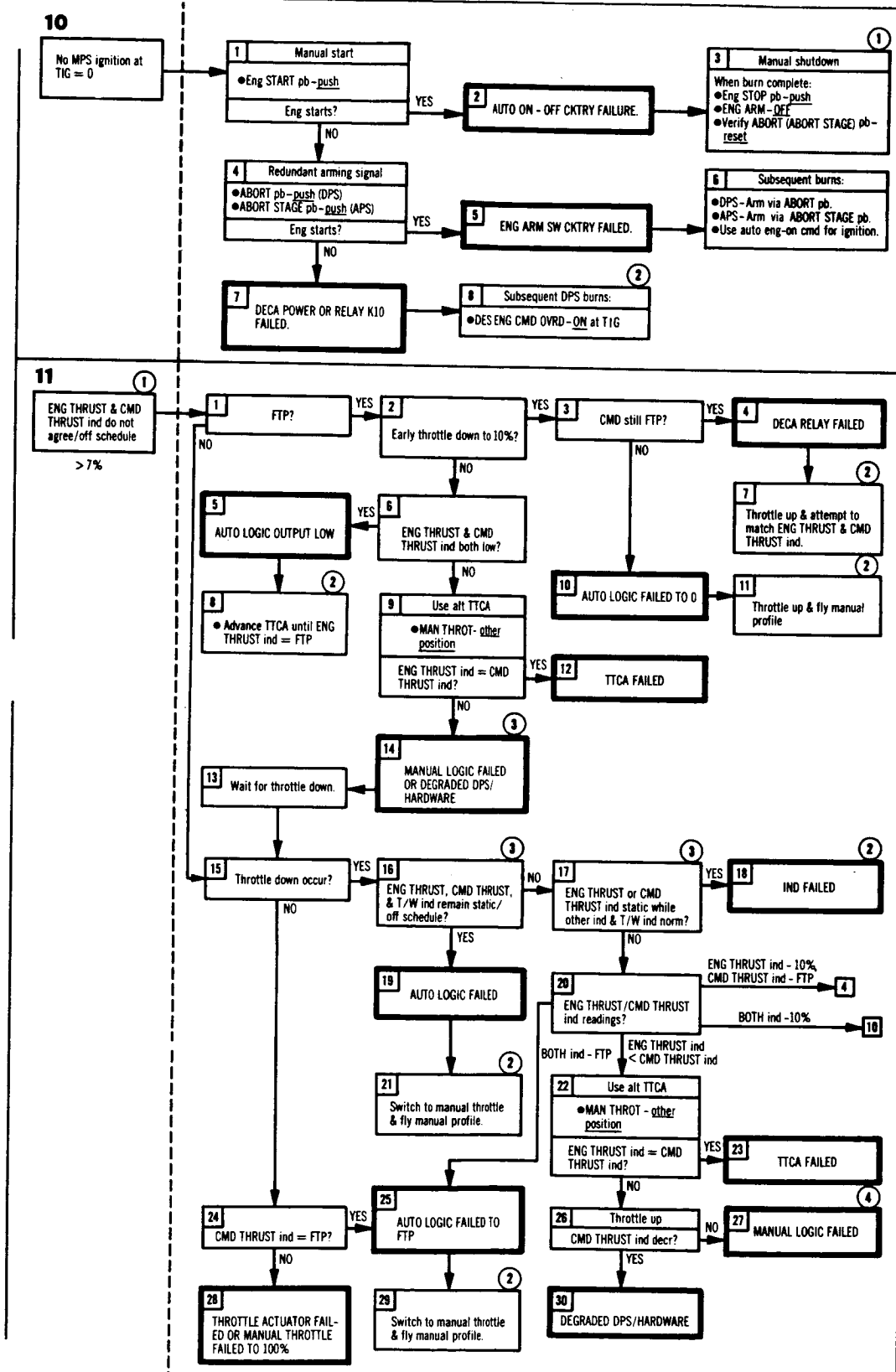

REMARKS

(1) Failure of MPS to start and stop automatically will also result from failure of cb (16) S/C: ENG ARM. If this circuit breaker is open, manual starts and stops will be required for subsequent burns. Delay arming engine until TIG.

(2) MSFN will advise if maximum thrust /fixed gimbal DPS starts are expected. No APS burns are possible, due to double CES failure. If descent engine override is used to start first DPS burn, supercritical helium may not be pressurized.

(1) DPS throat erosion is expected to decrease command thrust ≈1% below timeline and engine thrust ≈ 5% below timeline. With maximum abnormal propellant pressures, 7% difference could be nominal.

(2) Desired auto throttle display available on DSKY in R1 of N92.

(3) MSFN monitors DPS performance.

(4) DPS should not be operated for more than 25 seconds in nonthrottleable range.

A-300LM5-1021

SYMPTOM	PROCEDURE	REMARKS

SYMPTOM	PROCEDURE	REMARKS
12 PRE AMPS — YELLOW. Light on if either −4.7-vdc power supply is out of tolerance	1 CES AC lt-on? NO → 2 (1) ONE OR BOTH −4.7-VDC PREAMP BIAS POWER SUPPLIES FAILED. YES ↓	(1) Sporadic jet firings are possible if both power supplies failed.
13 (1) CES AC — RED. Light on if ATCA a-c power supplies are out of tolerance	1 Reset light & perform rate gyro test. •GUID CONT-PGNS •GYRO TEST POS RT-POS RT •Observe rate needles & light. CES AC lt remains on? YES → 4 (4) CWEA FAILURE. NO → 2 Rate displays null? YES → 3 (2)(3) SINGLE-PHASE ATCA POWER SUPPLY FAILED. NO → 5 (5) Reinitialize CWEA •cb (16) INST: CWEA-open, then close. CES AC lt remains off? YES → 8 TRANSIENT CONDITION. NO → 6 •Make small mnvr via PGNS rate mode. Rate inds >0? YES → 7 (6) POWER SUPPLY VOLTAGE OUT OF TOLERANCE (1ϕ OR 3ϕ) OR 1ϕ OF 3ϕ FAILED. NO → 9 (2)(7) POWER TO RATE GYRO FAILED.	(1) If AGS is in control, true CES a-c failure causes loss of damping. (2) AGS control of LM lost, but AEA remains for computation purposes only. (3) RR usable only in LGC mode. Shaft and trunnion power lost in SLEW and AUTO TRACK. (4) Subsequent CES a-c monitoring lost. (5) Resetting cb (16) INST: CWEA causes MASTER ALARM — on. (6) Rate gyro assembly will probably not restart after shutdown. (7) FDAI rate needles are invalid, but rates may be displayed on error needles via V60E (full-scale deflection = ±1.25°/sec).
14 CES DC — RED. Light on if ATCA d-c power supplies are out of tolerance	1 Reset light. •GUID CONT-PGNS •GYRO TEST POS RT-POS RT. CES DC lt remains on? YES → 5 (4) CWEA FAILURE. NO → 2 (1) Reinitialize CWEA. •cb (16) INST: CWEA-open, then close. CES DC lt remains off? YES → 6 (5) TRANSIENT CONDITION. NO → 3 Staged? YES → 4 (2)(3) ATCA POWER SUPPLY (±15V, ±6V, AND/OR +4.3V) FAILED. NO → 7 Enable throttle actuator. •Eng STOP pb-push •ENG ARM-DES. MSFN reports throttle at max? NO → 8 (4)(6) ±6V ATCA POWER SUPPLY FAILED. YES → 9 (4)(7) ±15V OR +4.3V ATCA POWER SUPPLY FAILED.	(1) Resetting cb (16) INST: CWEA causes MASTER ALARM — on. (2) AGS attitude control lost. (3) Subsequent APS burns should be started manually. (4) Subsequent CES d-c monitoring lost. (5) This transient condition may have caused throttle to lock in 100% position. Cycle cb AC BUS A: DECA GMBL and/or check throttle position with MSFN. (6) DPS and APS operation is normal in PGNS. (7) DPS fixed at maximum throttle with gimbal locked.

B-300LM5-1013

RC 96

5.2.5 DESCENT PROPULSION SECTION

5.2.5.1 General

- Double failures are not considered.
- During descent engine burns, continue the burn unless it becomes apparent that an explosion could occur.
- The DPS is loaded with helium and propellants according to prescribed values.
- The DPS has been checked before use.
- The status of all tb's has been checked and verified before entering the tb malfunction procedures.

5.2.5.2 Assumptions

5.2.5.2.1 Off-Nominal Helium Pressure, or Propellant Temperature or Pressure, Indication

- Large leaks are not considered.
- These are troubleshooting procedures intended to locate, identify, and isolate off-nominal conditions that do not trigger the CWEA or provide discrete malfunction indications.
- The crew does not enter into this symptom unless they have had an obvious off-nominal condition.
- Heat or cold-soak is not a malfunction.

5.2.5.2.2 DES REG Warning Light

- The DES REG warn lt CWEA logic has been enabled by the first descent engine arming, since CB INST: CWEA has been closed.
- The LM has not staged.

5.2.5.2.3 Deleted.

5.2.5.2.4 Abnormal PQGS Indication

- Quantity indications are not reliable until after ullage settling.

Table 5-5. DPS Procedure Entry Sheet

Symptom	Sym No.	Page No.
DES REG warn lt	1	5.2-24
Fuel/oxid press abnormal	1a	5.2-24
Fuel/oxid temp abnormal	2	5.2-25
He press abnormal	3	5.2-25
DES He REG 1 (2) tb - bp	4	5.2-25
DES He REG 2 (1) tb - gray	5	5.2-25
DES QTY warn lt	6	5.2-26
PQGS ind abnormal	7	5.2-26
FUEL VENT (OXID VENT) tb - abnormal	8	5.2-26

SYMPTOM	PROCEDURE	REMARKS

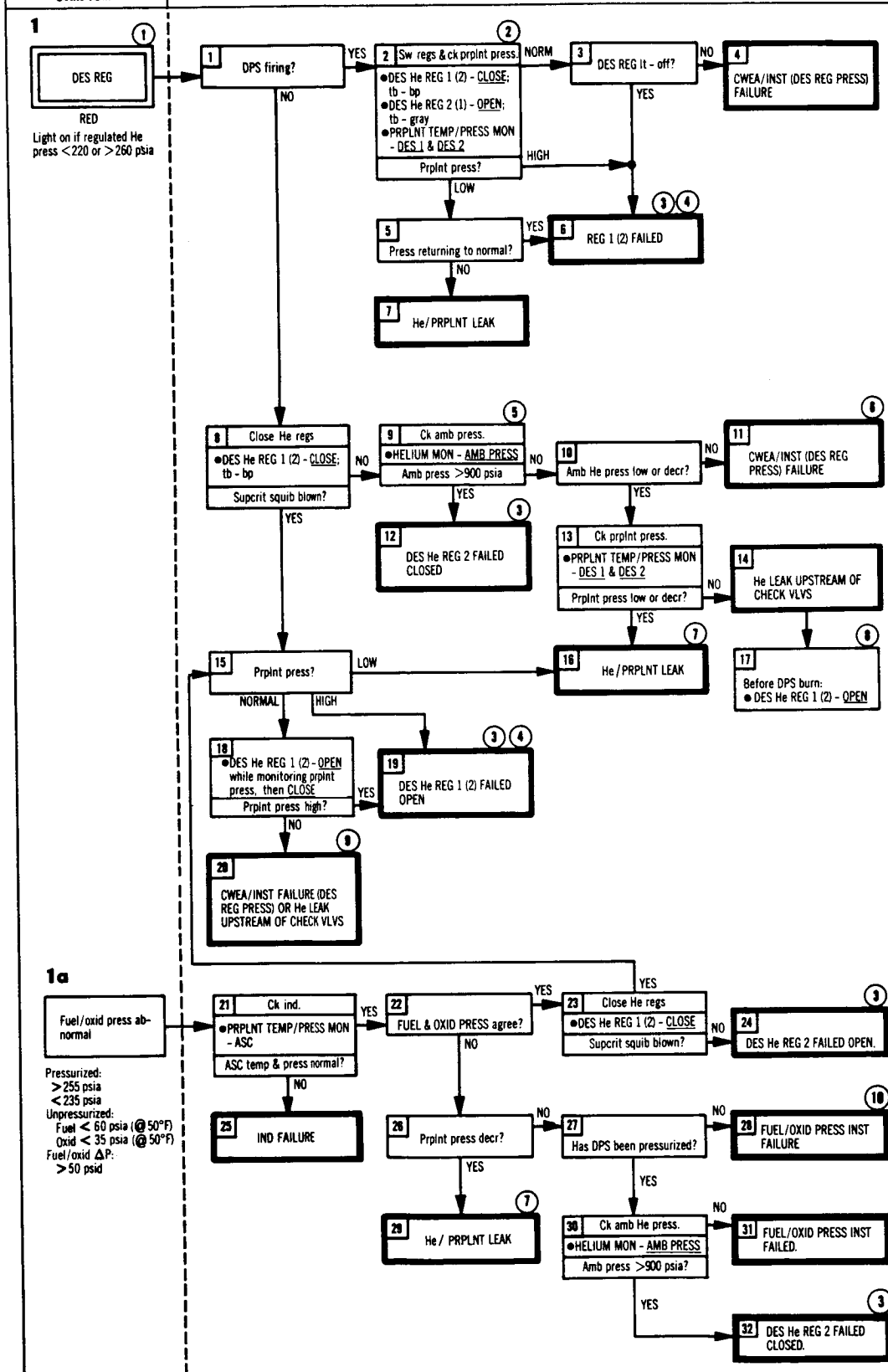

(1) Light is enabled when unstaged and after ENG ARM - DES for first time, or ABORT pb has been pushed (engine-arm signal-enabling logic delayed until 6 seconds after engine-on command is issued).

(2) If descent regulator fails open (pressure >260 psia), regulator SOV must be closed within 5 seconds to prevent SOV from freezing open or damage to seal.

(3) Helium regulator redundancy is lost.

(4) If there will be second DPS burn, close both regulators until just before burn, to prevent possible loss of helium through relief valves.

(5) Assumption: Ambient helium squib blown.

(6) If DES REG lt remains on after initial ambient helium pressurization, low propellant pressure may have been cause. Verify with MSFN before making DPS burn.

(7) Source of leak cannot be identified.

(8) Descent helium will leak whenever regulators are opened. Verify with MFSN before selecting regulators.

(9) MSFN and crew can distinguish between these two failures. Crew can determine failure by monitoring SUPCRIT PRESS and AMB PRESS on HELIUM ind.

(10) A slow leak may appear as an inst failure. Consult MSFN

B-300LM5-1026

SYMPTOM	PROCEDURE	REMARKS

SYMPTOM | PROCEDURE | REMARKS

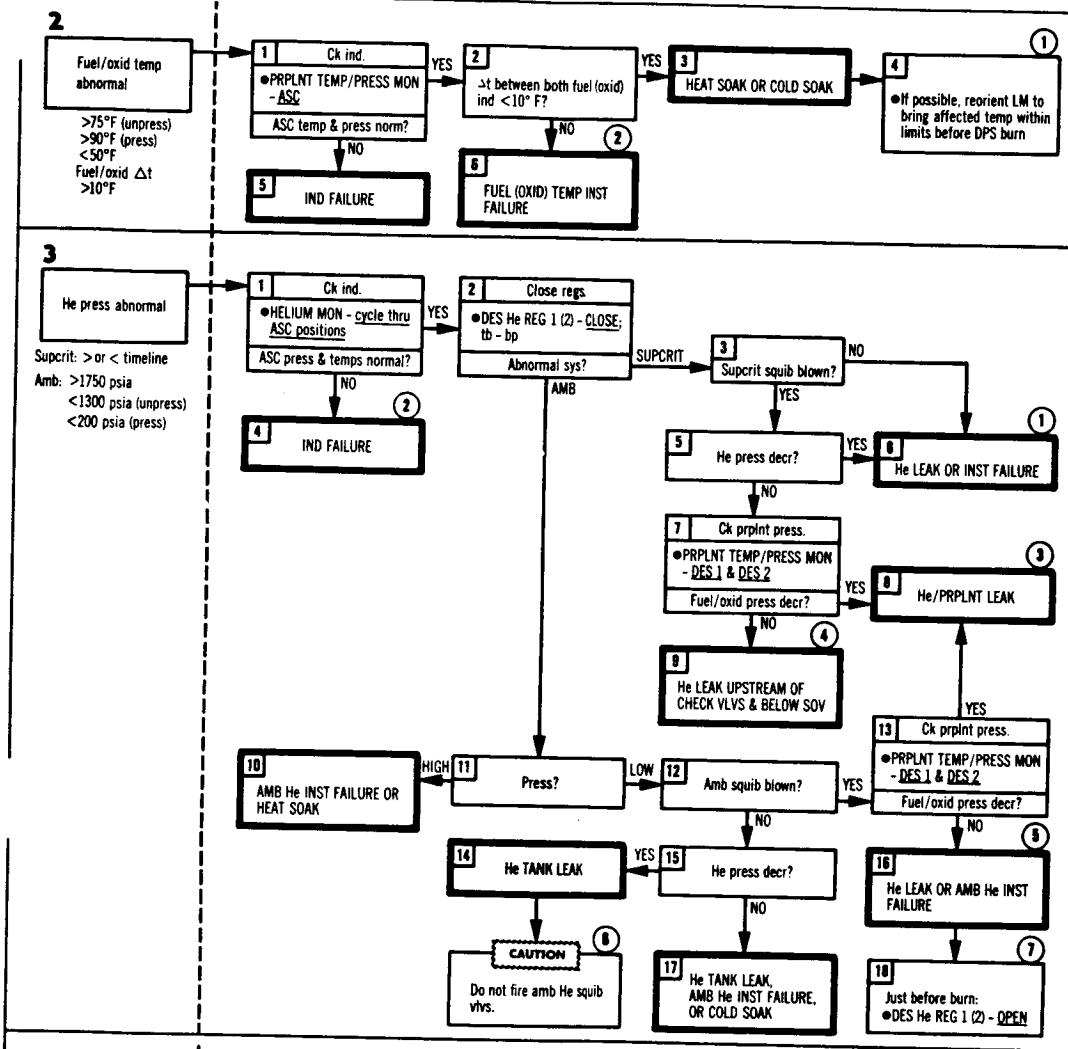

REMARKS

1. Descent tanks No. 1 are located at + Y & − Z. Descent tanks No. 2 are located at − Y & + Z.
2. Use unaffected temp to estimate temp of failed tank sensor.
1. MSFN can distinguish between these failures.
2. DES REG It and fuel/oxidizer pressure are only indications of abnormal helium pressure.
3. Source of leak cannot be identified.
4. He supply will not be depleted with descent regs closed. Open descent regs just prior to burn.
5. If DES REG It comes on, failure is helium leak upstream of check valves.
6. If ambient helium squib valves are fired, supercritical helium will be lost through same leak.
7. Verify with MSFN before selecting regulators.
1. Helium regulator redundancy may be lost. Failure can be confirmed by decreasing fuel/oxidizer pressure during burn if DES He REG 2 is not opened.
1. DES He REG 2 SOV is open if ambient helium tank pressure is approximately equal to supercritical helium pressure after first descent engine burn has been initiated.

C-300LM5-1031

SYMPTOM | PROCEDURE | REMARKS

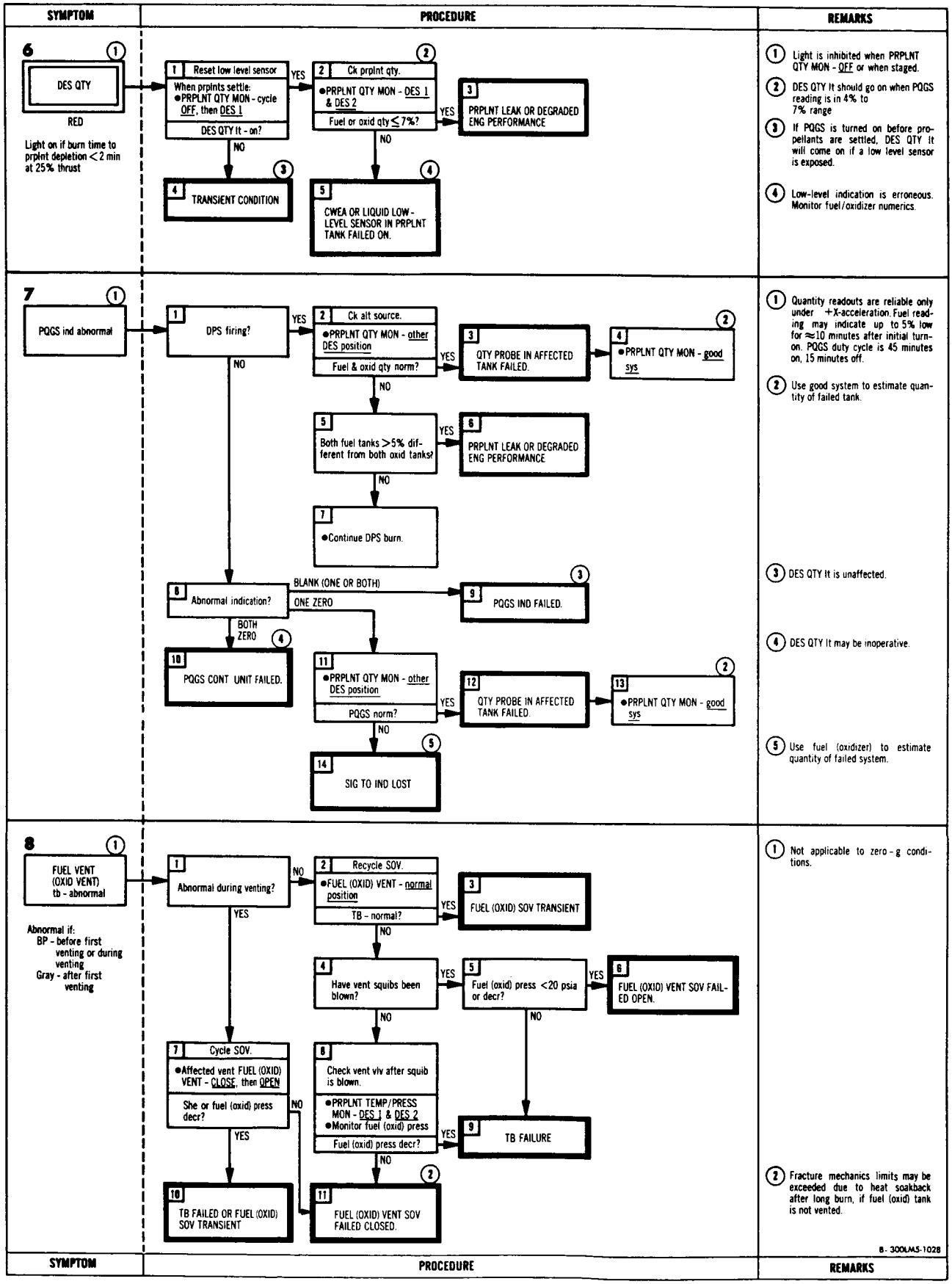
SYMPTOM
PROCEDURE
REMARKS
6
DES QTY
RED
Light on if burn time to prplnt depletion < 2 min at 25% thrust
1 Reset low level sensor
When prplnts settle:
•PRPLNT QTY MON - cycle OFF, then DES 1
DES QTY lt - on?
YES
NO
2 Ck prplnt qty.
•PRPLNT QTY MON - DES 1 & DES 2
Fuel or oxid qty ≤ 7%?
YES
NO
3 PRPLNT LEAK OR DEGRADED ENG PERFORMANCE
4 TRANSIENT CONDITION
5 CWEA OR LIQUID LOW-LEVEL SENSOR IN PRPLNT TANK FAILED ON.
1 Light is inhibited when PRPLNT QTY MON - OFF or when staged.
2 DES QTY lt should go on when PQGS reading is in 4% to 7% range
3 If PQGS is turned on before propellants are settled, DES QTY lt will come on if a low level sensor is exposed.
4 Low-level indication is erroneous. Monitor fuel/oxidizer numerics.
7
PQGS ind abnormal
1 DPS firing?
YES
NO
2 Ck alt source.
•PRPLNT QTY MON - other DES position
Fuel & oxid qty norm?
YES
NO
3 QTY PROBE IN AFFECTED TANK FAILED.
4 •PRPLNT QTY MON - good sys
5 Both fuel tanks > 5% different from both oxid tanks?
YES
NO
6 PRPLNT LEAK OR DEGRADED ENG PERFORMANCE
7 •Continue DPS burn.
8 Abnormal indication?
BLANK (ONE OR BOTH)
ONE ZERO
BOTH ZERO
9 PQGS IND FAILED.
10 PQGS CONT UNIT FAILED.
11 •PRPLNT QTY MON - other DES position
PQGS norm?
YES
NO
12 QTY PROBE IN AFFECTED TANK FAILED.
13 •PRPLNT QTY MON - good sys
14 SIG TO IND LOST
1 Quantity readouts are reliable only under +X-acceleration. Fuel reading may indicate up to 5% low for ≈10 minutes after initial turn-on. PQGS duty cycle is 45 minutes on, 15 minutes off.
2 Use good system to estimate quantity of failed tank.
3 DES QTY lt is unaffected.
4 DES QTY lt may be inoperative.
5 Use fuel (oxidizer) to estimate quantity of failed system.
8
FUEL VENT (OXID VENT) tb - abnormal
Abnormal if:
BP - before first venting or during venting
Gray - after first venting
1 Abnormal during venting?
NO
YES
2 Recycle SOV.
•FUEL (OXID) VENT - normal position
TB - normal?
YES
NO
3 FUEL (OXID) SOV TRANSIENT
4 Have vent squibs been blown?
YES
NO
5 Fuel (oxid) press < 20 psia or decr?
YES
NO
6 FUEL (OXID) VENT SOV FAILED OPEN.
7 Cycle SOV.
•Affected vent FUEL (OXID) VENT - CLOSE, then OPEN
She or fuel (oxid) press decr?
NO
YES
8 Check vent viv after squib is blown.
•PRPLNT TEMP/PRESS MON - DES 1 & DES 2
•Monitor fuel (oxid) press
Fuel (oxid) press decr?
YES
NO
9 TB FAILURE
10 TB FAILED OR FUEL (OXID) SOV TRANSIENT
11 FUEL (OXID) VENT SOV FAILED CLOSED.
1 Not applicable to zero-g conditions.
2 Fracture mechanics limits may be exceeded due to heat soakback after long burn, if fuel (oxid) tank is not vented.
B-300LM5-1028
SYMPTOM
PROCEDURE
REMARKS

5.2.6 ASCENT PROPULSION SECTION

5.2.6.1 General

- Double failures are not considered, except that in the ASC HI REG caut lt malfunction procedure a double failure (series-parallel regulators) causes the ASC HI REG caut lt to go on.
- During ascent engine burns, continue the burn unless it becomes apparent that an explosion could occur.
- The APS is loaded with helium and propellants according to prescribed values.
- The APS has been checked before use.
- The status of all tb's has been checked and verified before entering the tb malfunction procedures.

5.2.6.2 Assumptions

5.2.6.2.1 Off-Nominal Helium, or Propellant Temperature or Pressure, Indication

- Large leaks are not considered.
- These are troubleshooting procedures that cover off-nominal and anomalous conditions that do not trigger the CWEA or provide discrete malfunction indications.
- The crew does not enter into this symptom unless they have had an obvious off-nominal condition.
- Heat or cold-soak is not a malfunction.

5.2.6.2.2 ASC PRESS Warning Light

- If this light goes on during a non-mission critical burn, immediately shut down the engine.

5.2.6.2.3 ASC QTY Caution Light

- A malfunction does not exist if this light goes on at the nominal time.

Table 5-6. APS Procedure Entry Sheet

Symptom	Sym No.	Page No.
ASC PRESS warn lt	1	5.2-28
Fuel or oxid temp abnormal	2	5.2.28
Fuel or oxid press abnormal	2a	5.2.28
He press abnormal or decr	3	5.2-29
ASC QTY caut lt	4	5.2-29
ASC HI REG caut lt	5	5.2-29
ASC He REG 1 (2) tb - bp	6	5.2-29

SYMPTOM	PROCEDURE	REMARKS

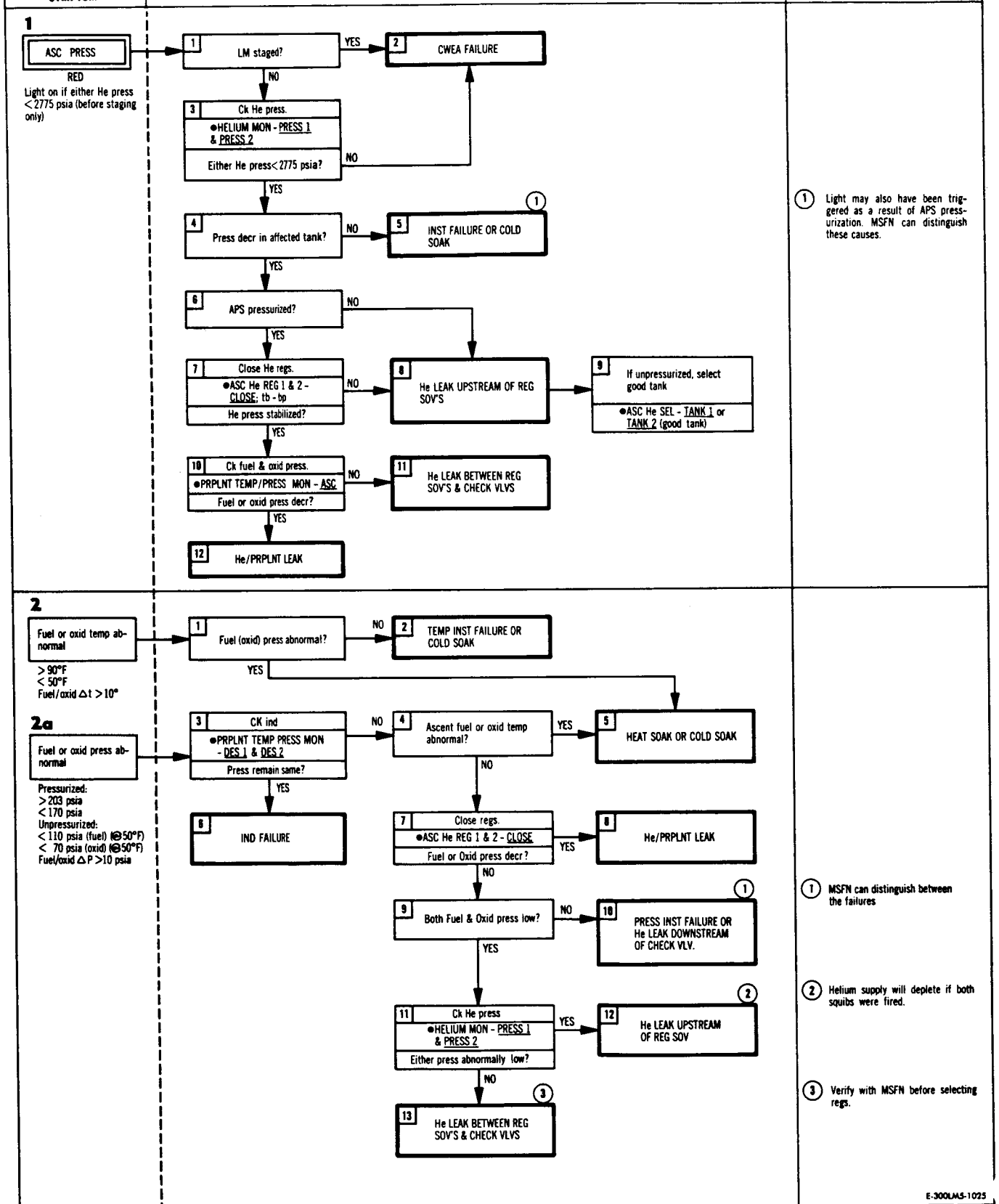

SYMPTOM	PROCEDURE	REMARKS

SYMPTOM	PROCEDURE	REMARKS
He press abnormal or decr >3300 psia <2900 psia	1 Ck ind. •HELIUM MON - cycle Ind responds? YES → 2 Press? HIGH → 3 PRESS INST FAILURE OR HEAT SOAK (1) LOW → APS 1 4 NO → 4 IND FAILURE	(1) MSFN can determine which condition exists.
4 ASC QTY YELLOW Light on when burn time < 8 sec.	1 APS firing? YES → 2 Terminate APS/RCS interconnect. •SYS A & B MAIN SOV - OPEN; tb - gray •SYS A & B ASC FEED 1 & 2 - CLOSE •SYS A & B ASC FUEL & OXID tb - bp 3 After APS burn completed, close regs & ck for leak •ASC He REG 1 & 2 - CLOSE; tb - bp Fuel or oxid press decr? NO → 4 CWEA OR LOW LEVEL SENSOR FAILURE YES → 6 PROPELLANT LEAK NO → 5 CWEA FAILURE (1)	(1) C/W indication of when to close ASC FEED valves lost.
5 ASC HI REG YELLOW Light on if He manf press >220 psia	1 Close regs. •ASC He REG 1 & 2 - CLOSE; tb - bp •PRPLNT TEMP/PRESS MON - ASC Fuel & oxid press >220 psia? YES → 2 ASC He REGS FAILED OPEN. (DOUBLE FAILURE) → 3 When fuel & oxid press <220 psia: •ASC He REG 1 & 2 - OPEN; tb - gray individually to isolate failed leg NO → 4 CWEA/INST FAILURE → 5 Open ASC regs. •ASC He REG 1 & 2 - OPEN; tb - gray	
6 ASC He REG 1 (2) tb - bp	1 •ASC He REG 1 (2) - OPEN TB - gray? YES → 2 He REG SOV UNLATCHED NO → 3 TB/INST FAILURE OR He REG SOV FAILED CLOSED (1)	(1) MSFN can distinguish between these two failures.

C-300LM5-1027

5.2.7 REACTION CONTROL SUBSYSTEM

5.2.7.1 General

- The integrity of the RCS is verified before entering the off-nominal condition indicated in the "symptom" column of each RCS malfunction procedure.

5.2.7.2 Assumptions

5.2.7.2.1 RCS Caution Light

- An RCS propellant leak can cause the RCS caut lt to go on, but this will only happen if a leak occurs when the propellant quantity is very low or if the propellant tanks rupture. (The probability of the propellant tanks rupturing is very remote.)

5.2.7.2.2 RCS TCA Warning Light

- A translation maneuver must be completed before any action is taken regarding the RCS TCA warn lt, except if two or more red tb's appear for the same RCS system (A or B). Appearance of the red tb's would indicate that the main SOV's or ascent feed vlvs unlatched or failed closed.
- Crossfeed vlvs are not open.
- Ascent feed vlvs are not open, except during +X-translation.

5.2.7.2.3 Talkback Anomaly

- The status of all tb's is checked and verified before entering the tb anomaly malfunction procedure.

5.2.7.2.4 PQMD Off Nominal

- Temp compensation of the PQMD pressure xducer has considerable time lag. During periods of high propellant use, the PQMD may indicate 5% to 10% low for several minutes.
- The PQMD malfunction procedure is primarily for detection of leaks and xducer failures. It is not applicable to off-nominal performance of the thrusters or digital autopilot.

5.2.7.2.5 Off-Nominal RCS Propellant or Helium Indication

- A helium reg failure is not considered in this malfunction procedure because the RCS: A & B PRESS ind are not sensitive enough to reflect regulated helium pressure changes less than 20 psia. However, the RCS A & B REG warn lt alerts the crew to high and low regulated helium pressure.

Table 5-7. RCS Procedure Entry Sheet

Symptom	Sym No.	Page No.
RCS caut lt	1	5.2-32
He press low or decr	1a	5.2-32
PQMD abnormal	1b	5.2-32
RCS press or temp abnormal	2	5.2-32
RCS A (B) REG warn lt	3	5.2-33
RCS TCA warn lt	4	5.2-33
TB abnormal (QUAD)	5a	5.2-34
TB abnormal (MAIN SOV, CRSFD, ASC FEED)	5b	5.2-34

SYMPTOM | **PROCEDURE** | **REMARKS**

1 (1) RCS

YELLOW
Light on if He tank press <1700 psi (sys A or B)

1a He press low or decr

If systems are decreasing at abnormal rate, refer to Abnormal Vehicle Dynamics procedure.

1b PQMD abnormal

If systems are decreasing at abnormal rate, refer to Abnormal Vehicle Dynamics procedure.

(2)

1 Ck He press.
- ●TEMP/PRESS MON - He
- Either He press <1700?

NO → 2 CWEA FAILURE

YES → 3 RCS qty norm?

NO → 4 He press <1400?

YES → 5 He LEAK → 6 Shut down failed sys when manf press reaches 100 psia.
- ●Failed sys: MAIN SOV- CLOSE; tb-bp
- ●CRSFD-OPEN; tb-gray

YES → 7 He PRESS TRANSDUCER FAILED.

NO → 8 Find leak.
- Affected sys:
- ●cb RCS SYS: QUAD 1, 2, 3, & 4 TCA - open
- ●RCS: SYS QUAD 1, 2, 3, & 4 - DISABLE; tb - bp
- ●MAIN SOV - CLOSE; tb - bp
- He press decr?

YES → (3) 9 He/PRPLNT LEAK ABOVE MAIN SOV → 10 Affested sys:
- ●MAIN SOV - OPEN; tb - gray
- ●cb RCS SYS: QUAD 1, 2, 3 & 4 TCA - close
- ●RCS: SYS QUAD 1, 2, 3 & 4 - ENABLE; tb - gray

NO → 11 Ck PQMD with He press
- ●TEMP/PRESS MON - He
- ●Ck affected sys
- He press norm?

YES → (5) 15 PQMD FAILED IN AFFECTED SYS

NO → 12
- ●TEMP/PRESS MON - FUEL MANF & OXID MANF
- Prplnt manf press decr?

YES → (4) 13 PRPLNT LEAK BELOW MAIN SOV → 14 Shut down failed sys when fuel or oxid manf press reaches 100 psia.
- ●Failed sys MAIN SOV- CLOSE; tb - bp
- ●CRSFD - OPEN; tb - gray

CAUTION
CRSFD must remain closed to avoid loss of prplnt from good sys.

NO → 16 ABNORMAL USE OF SYS A (B) PRPLNT → 17 Affected sys:
- ●MAIN SOV - OPEN; tb - gray
- ●cb RCS SYS: QUAD 1, 2, 3 & 4 TCA - close
- ●RCS: SYS QUAD 1, 2, 3, & 4 - ENABLE; tb - gray

→ 19 Shut down failed sys when fuel or oxid manf press reaches 100 psia.
- ●Failed sys MAIN SOV - CLOSE; tb - bp
- ●CRSFD - OPEN; tb - gray

18 Relieve prplnt press
- Affected sys:
- ●cb RCS SYS: QUAD 1, 2, 3, & 4 TCA - close.
- ●RCS: SYS QUAD 1, 2, 3, & 4 TCA - ENABLE; tb - gray
- ●Fire thruster in affected sys.
- ●cb RCS SYS: QUAD 1, 2, 3, & 4 TCA - open.
- ●RCS: SYS QUAD 1, 2, 3 & 4 TCA - DISABLE; tb - bp

REMARKS

(1) The direct and ACA hardover modes should not be used while trouble - shooting with this procedure.

(2) Light is reset when TEMP/PRESS MON is cycled to He.

(3) If helium pressure <1400 psia, leak is helium. If >1400 psia, source of leak cannot be identified until system stabilizes.

(4) Translation capability lost in following axes for loss of RCS system A or B.

	System A Lost	System B Lost
(1) PGNS loses	+Z, −Z	+Z, −Z
(2)	−Y	+Y
(3) AGS loses	+Z, −Z	+Z, −Z
(4)	−Y	+Y
(5)	−X	+X

Following conditions apply to above:
(1) PGNS will not command engine to fire.
(2) Translation totally lost.
(3) RCS thruster will fire, but LM will rotate and translate.
(4) Translation totally lost.
(5) Translation lost unless ATT/TRANSL - 4 JETS; then, two-jet translation will result.

(5) Use RCS quantity in unaffected system and helium pressure in affected system to estimate affected system quantity.

2 RCS press or temp abnormal

1 Ck ind.
- ●TEMP/PRESS MON - cycle
- Ind responds?

YES → 2 Ck RCS qty.
- ●Cross-check affected RCS Qty Sys.
- Qty low or decr?

NO → 3 Abnormal sensor?

PRESS → (2) 6 PRESS OR TEMP INST FAILURE

TEMP → 5 Sys A & B temp ≈ equal?

NO → (2) 6 PRESS OR TEMP INST FAILURE

YES → 7 COLD OR HEAT SOAK → 8 Do not fire thrusters if RCS prplnt temp: >100°F <40° F

NO → (1) 4 RCS SYS A (B) TEMP OR PRESS IND FAILED.

YES → RCS 1b 11 PQMD ABNORMAL

REMARKS

(1) Propellant temperature is indicated only in PRPLNT position. (Pointer drops to 20°F in other positions.) Use RCS It for low helium pressure and RCS A and B REG Its for high or low manifold pressure.

(2) Use temperature of unaffected system to estimate temperature of failed sensor. Use PQMD to estimate He pressure. Use alternate pressure (prplnt, fuel or oxid manf) to estimate pressure of failed sensor.

F-300LM5-1030

SYMPTOM | **PROCEDURE** | **REMARKS**

SYMPTOM	PROCEDURE	REMARKS

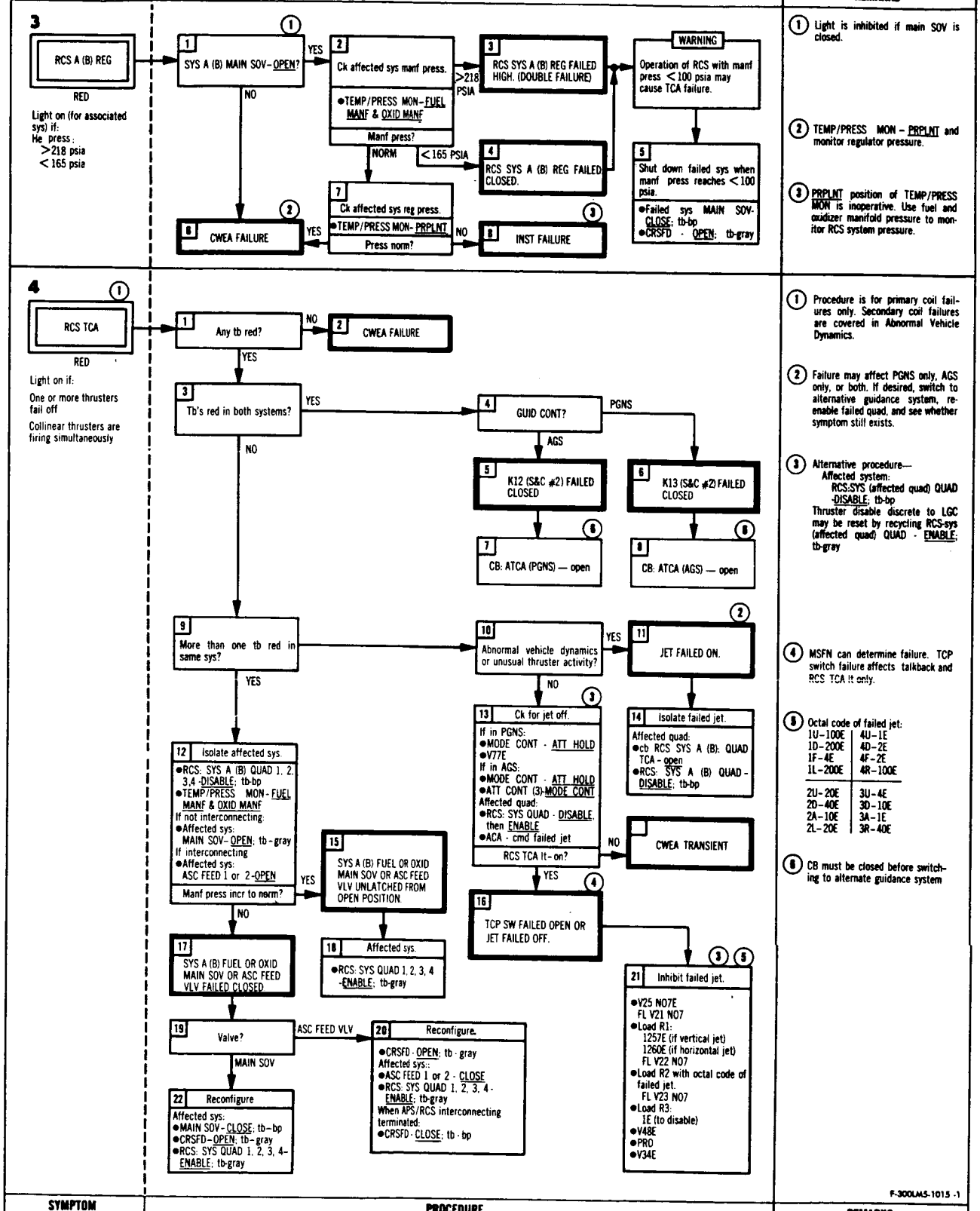

SYMPTOM	PROCEDURE	REMARKS

SYMPTOM	PROCEDURE	REMARKS
5a TB abnormal — QUAD **5b** TB abnormal — MAIN SOV, CRSFD, ASC FEED	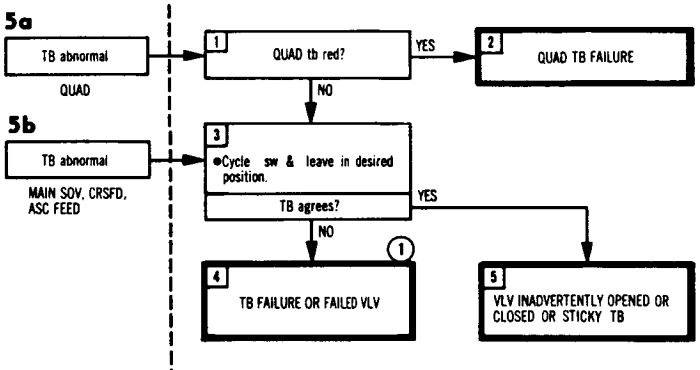	(1) When terminating APS/RCS interconnect: If SYS A (B) MAIN SOV tb-bp, leave CRSFD-OPEN. If SYS A (B) ASC FUEL or ASC OXID tb-gray, SYS A (B) ASC FEED 1-CLOSE, SYS A (B) ASC FEED 2-ASC FEED 2.

F-300LM3-1015-2

SYMPTOM	PROCEDURE	REMARKS

RCS

5.2.8 ELECTRICAL POWER SUBSYSTEM

5.2.8.1 Assumptions

- Troubleshooting will be performed when mission phase and task loading permit. Accordingly, certain malfunction procedures will not be performed until a main engine burn or critical maneuver is completed.
- Malfunction procedures are entered from normal operational modes. Procedures for checkout modes are not included.
- Inverter No. 2 is on line.
- No a-c circuit breaker opened before entering these procedures.
- In the case of loss of bus, recovery procedures for equipment other than EPS are not included (except for certain critical ECS recovery procedures indicated in symptoms 1 and 2 and for a recovery procedure for regaining EL lighting in symptom 4).
- A partial short as referred to in these procedures: (1) Affects either CDR or SE bus in such a way as to cause the bus voltage to drop below 26.5 volts; (2) Does not draw current of sufficient magnitude to actuate the associated ECA overcurrent relay (150 to 200 amps per ECA).

Table 5-8. EPS Procedure Entry Sheet

Symptom	Sym No.	Page No.
DC BUS warn lt (UNSTAGED)	1	5.2-36
VOLTS - low	1a	5.2-36
DC BUS warn lt (STAGED)	2	5.2-38
BATTERY caut lt (STAGED or UNSTAGED)	3	5.2-39
Deleted	4	5.2-39
Bat tb abnormal (STAGED or UNSTAGED)	5a	5.2-40
5 BAT tb abnormal (UNSTAGED)	5b	5.2-40
5 Bat tb abnormal (UNSTAGED)	5c	5.2-40
INVERTER caut lt	6	5.2-41
A-C voltage high	6a	5.2-41
Bus functions lost	SSR-1	5.2-42

LM2015

SYMPTOM	PROCEDURE	REMARKS

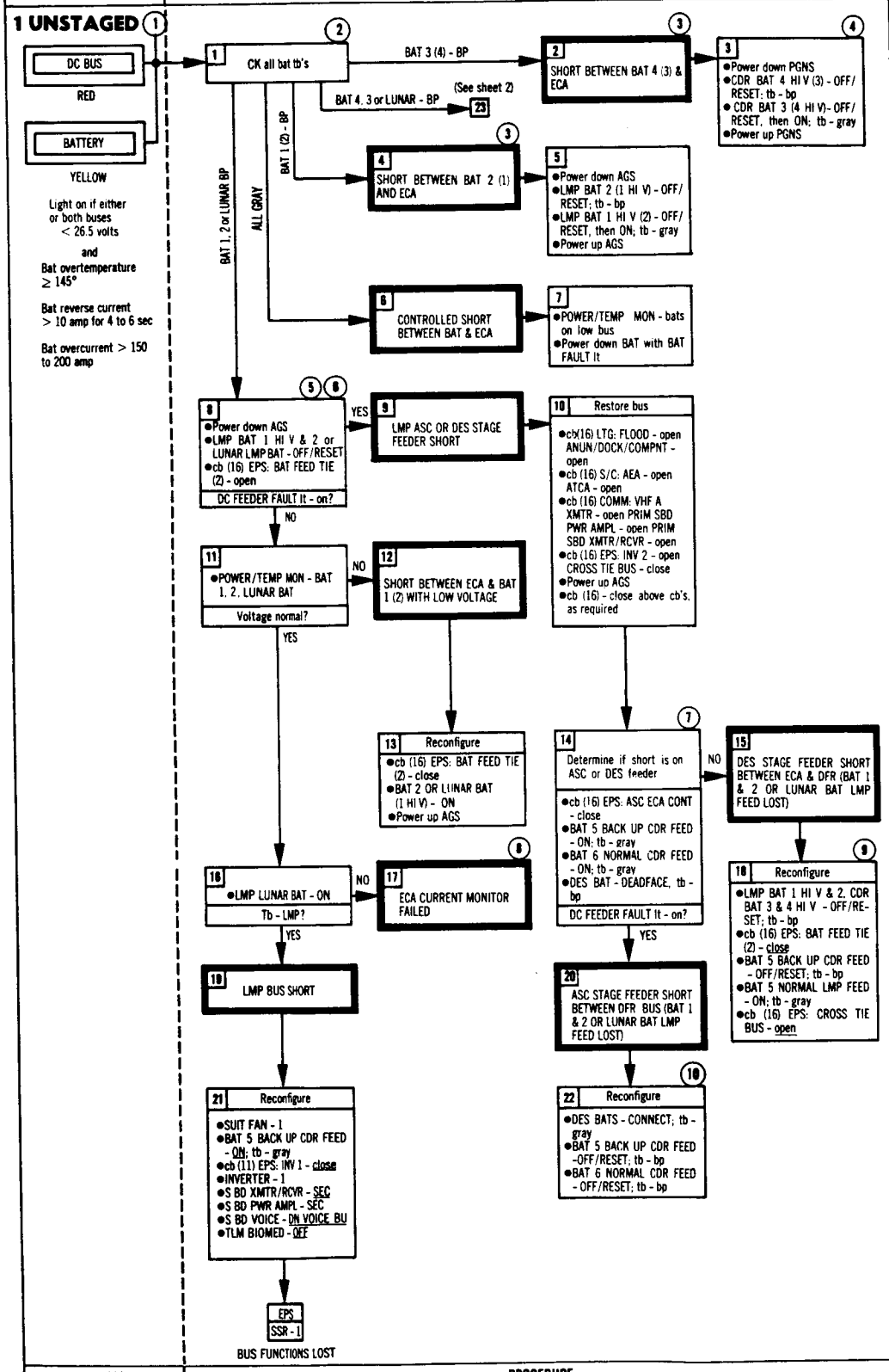

REMARKS

(1) Assumption: CROSS TIE is open. If CDR BUS voltage is lost for >20 minutes sublimator freeze up occurs.

(2) DC FEEDER FAULT lt may or may not be on.

(3) Short is on battery whose talkback is not bp. Good battery was disconnected by overcurrent.

(4) Allow 5 minutes before closing cb PGNS:IMU OPR (IMU gyro constraint)

(5) If failure occurs after PDI, refer to emergency procedure for CDR (LMP) BUS failure.

(6) COMM will be lost for time required to bring up secondary S-band or while troubleshooting. Option of remaining on primary S-Band, without COMM, until LMP BUS status is ascertained may be exercised.

(7) Remove 2.5 ampere-hours from each ascent battery before deadfacing.

(8) BAT 2 can not be placed ON.

(9) BAT 5 power is available through normal feed when deadfaced.

(10) BAT 6 (if CDR FEEDER shorted) or BAT 5 (if LMP FEEDER shorted) power is available only through back-up feed and should be so used before abort stage to preclude placing BAT 6 (5) on shorted feeder.

300LM10-9028-1

SYMPTOM	PROCEDURE	REMARKS

SYMPTOM	PROCEDURE	REMARKS

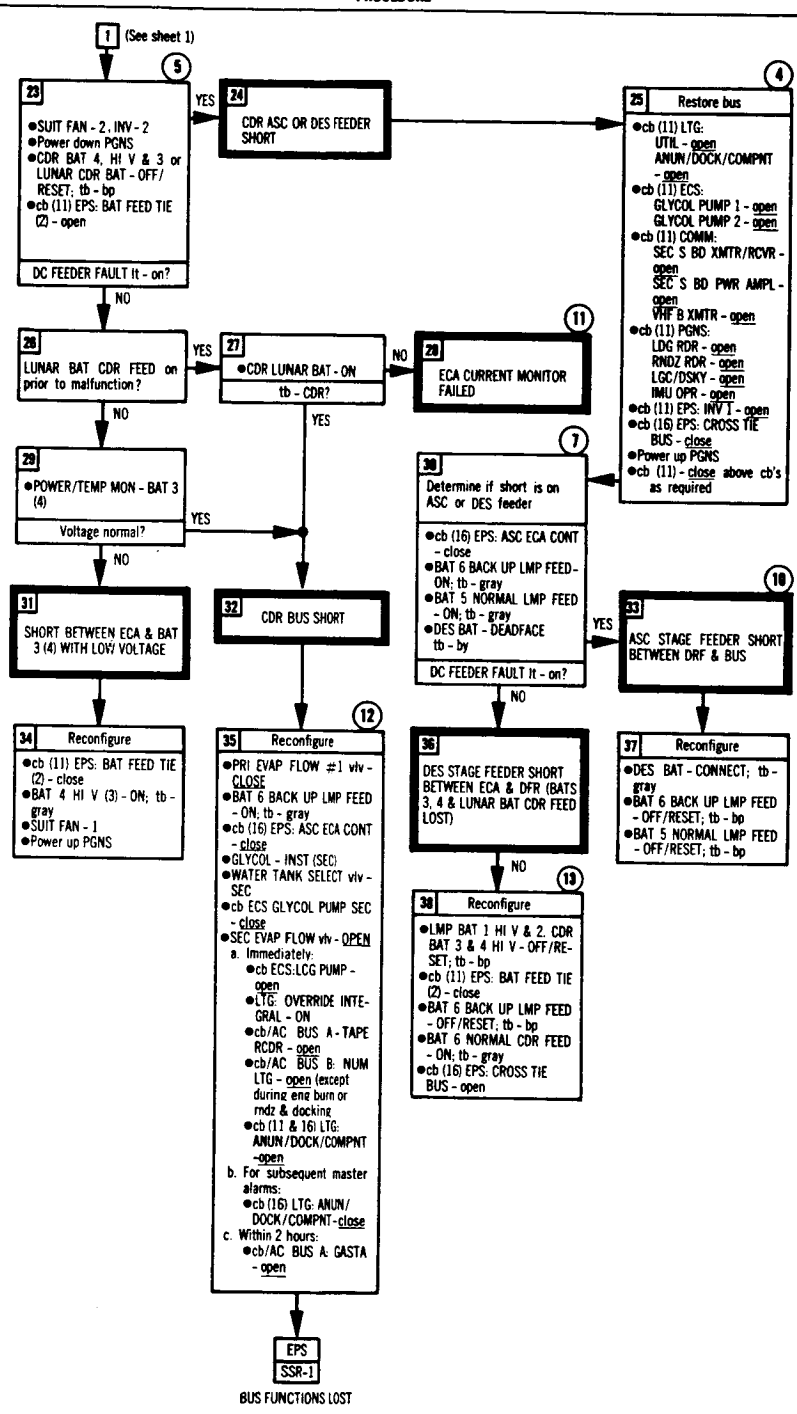

(11) BAT 3 can not be placed ON.

(12) PRIMARY GLYCOL LOOP is lost.

(13) BAT 6 power is available through normal feed when deadfaced.

A-300LM10-9028-2

SYMPTOM	PROCEDURE	REMARKS

SYMPTOM	PROCEDURE	REMARKS

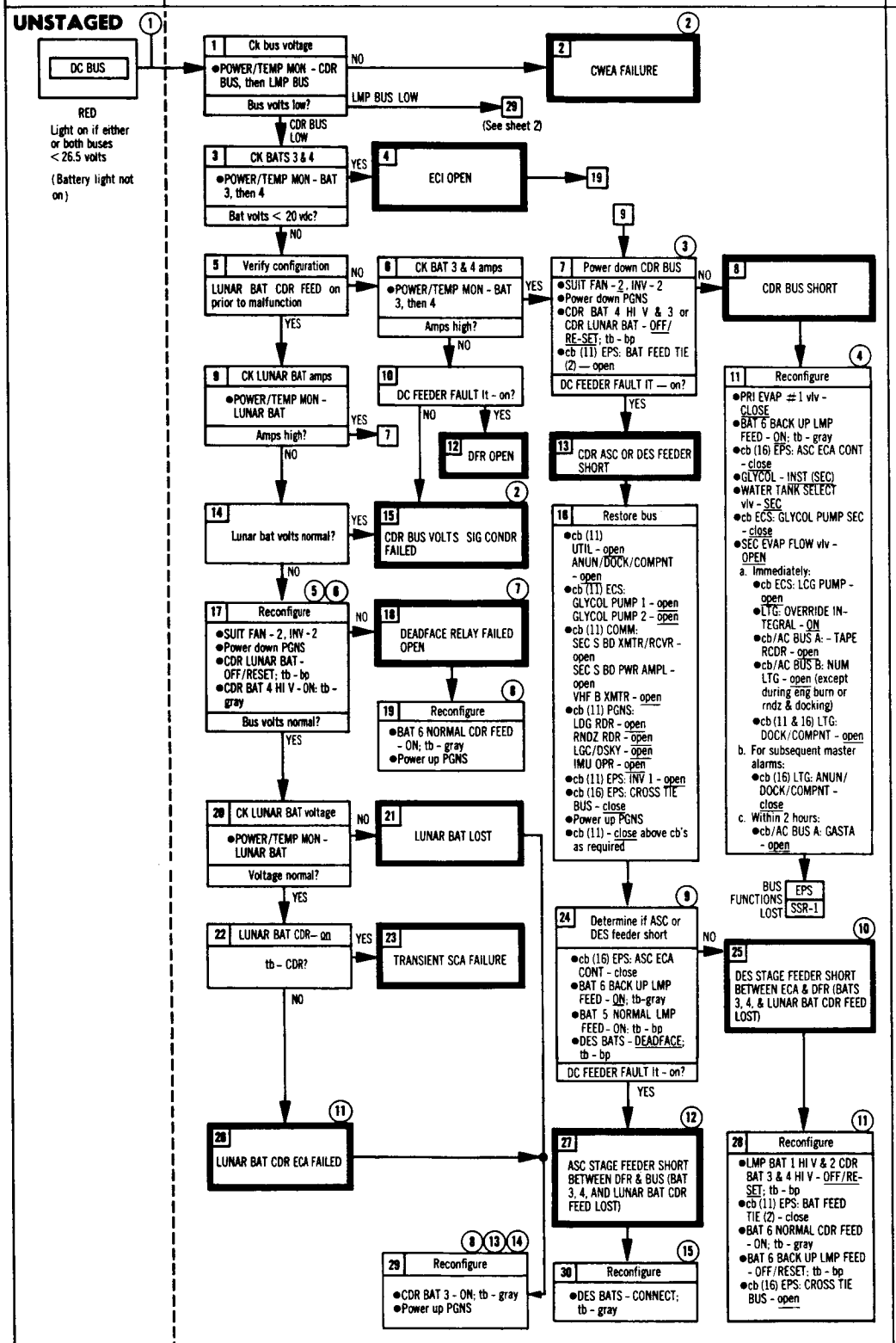

SYMPTOM	PROCEDURE	REMARKS

1. Assumption: Cross tie circuit is open prior to entering this procedure.
2. DC BUS It remains on and subsequent low bus voltage C/W monitoring is lost.
3. If failure occurs after PDI refer to emergency procedure for CDR BUS failure.
4. PRIMARY GLYCOL loop is lost.
5. BUS will lose power when LUNAR BAT OFF.
6. DE FEEDER FAULT It may or may not be on.
7. CDR BUS OK. BATS 3, 4, and LUNAR BAT CDR FEED lost. LUNAR BAT LMP FEED still available.
8. Allow 5 minutes from time of PGNS power down before closing cb PGNS: IMU OPR (IMU GYRO constraint).
9. Remove 2.5 ampere-hours from each ascent battery before deadfacing.
10. BAT 6 power is available through normal feed only after deadfacing.
11. LUNAR BAT CDR FEED lost. LUNAR BAT LMP FEED still available.
12. BAT 6 power is available only through back-up feed and should be so used before abort stage to preclude automatically placing BAT on the shorted feeder.
13. O. C. RELAY failure prevents BAT 3 from being placed on.
14. LUNAR BAT is lost.
15. To power both buses with descent batteries only, remove nonessential equipment until total load 50 amps.

A-300LM10-9029-1

SYMPTOM	PROCEDURE	REMARKS

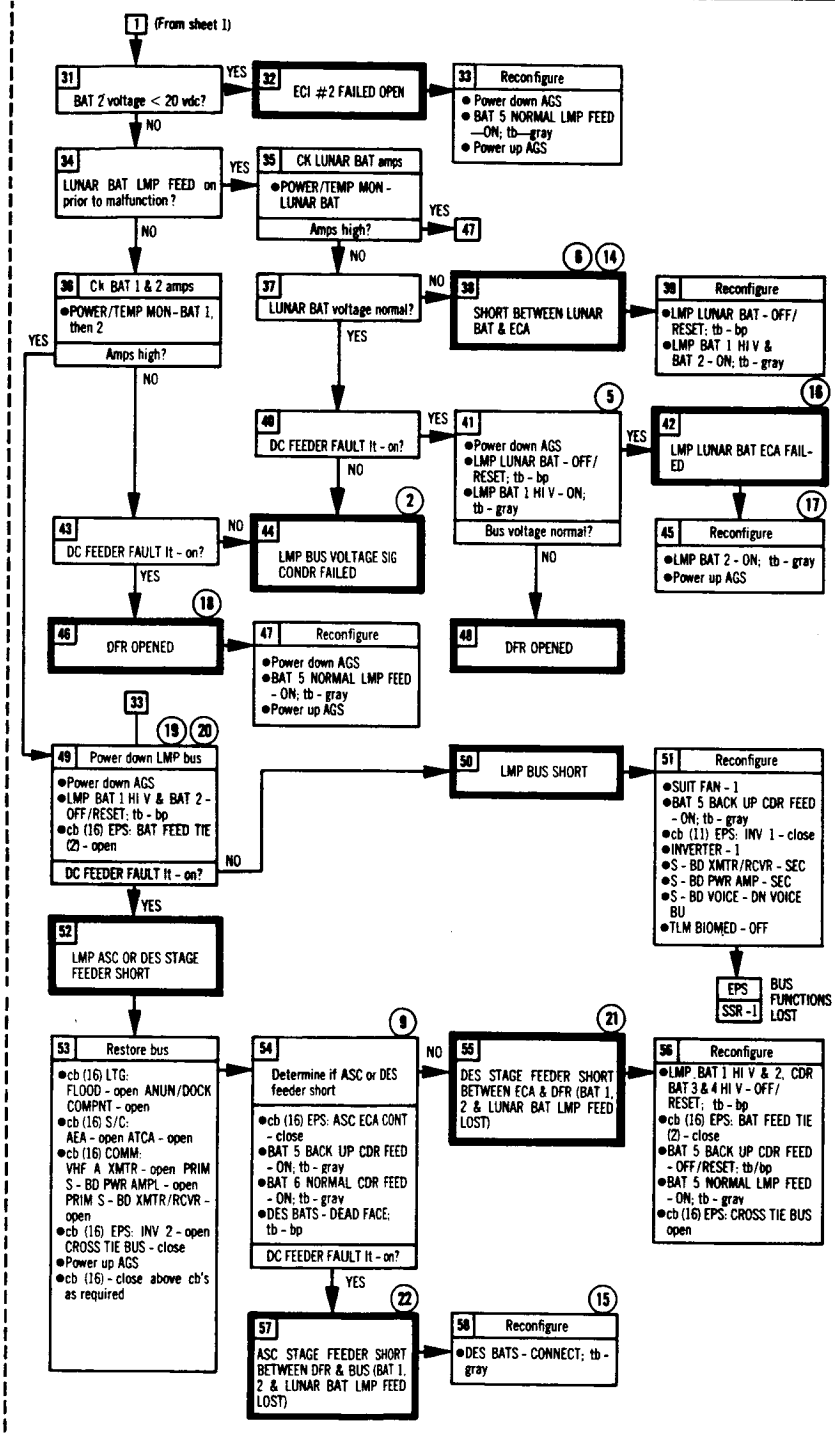

(16) LUNAR BAT LMP FEED lost LUNAR BAT CDR FEED still available.

(17) O. C. RELAY failure prevents BAT 2 from being placed on.

(18) LMP BUS OK. BAT 1, 2, and LUNAR BAT LMP FEED lost. LUNAR BAT CDR FEED still available.

(19) COMM will be lost for time required to bring up SEC S-BD or while trouble shooting. Option of remaining on PRI S-BD without COMM until LMP BUS status is ascertained may be exercised.

(20) If failure occurs after PDI, refer to emergency procedure for LMP BUS failure.

(21) BAT 5 power is available through normal feed only when deadfaced.

(22) BAT 5 power is available only through back-up feed and should be so used before abort stage to preclude automaticaly placing BAT 5 on the shorted feeder.

A-300-LM10-9029-2

SYMPTOM	PROCEDURE	REMARKS

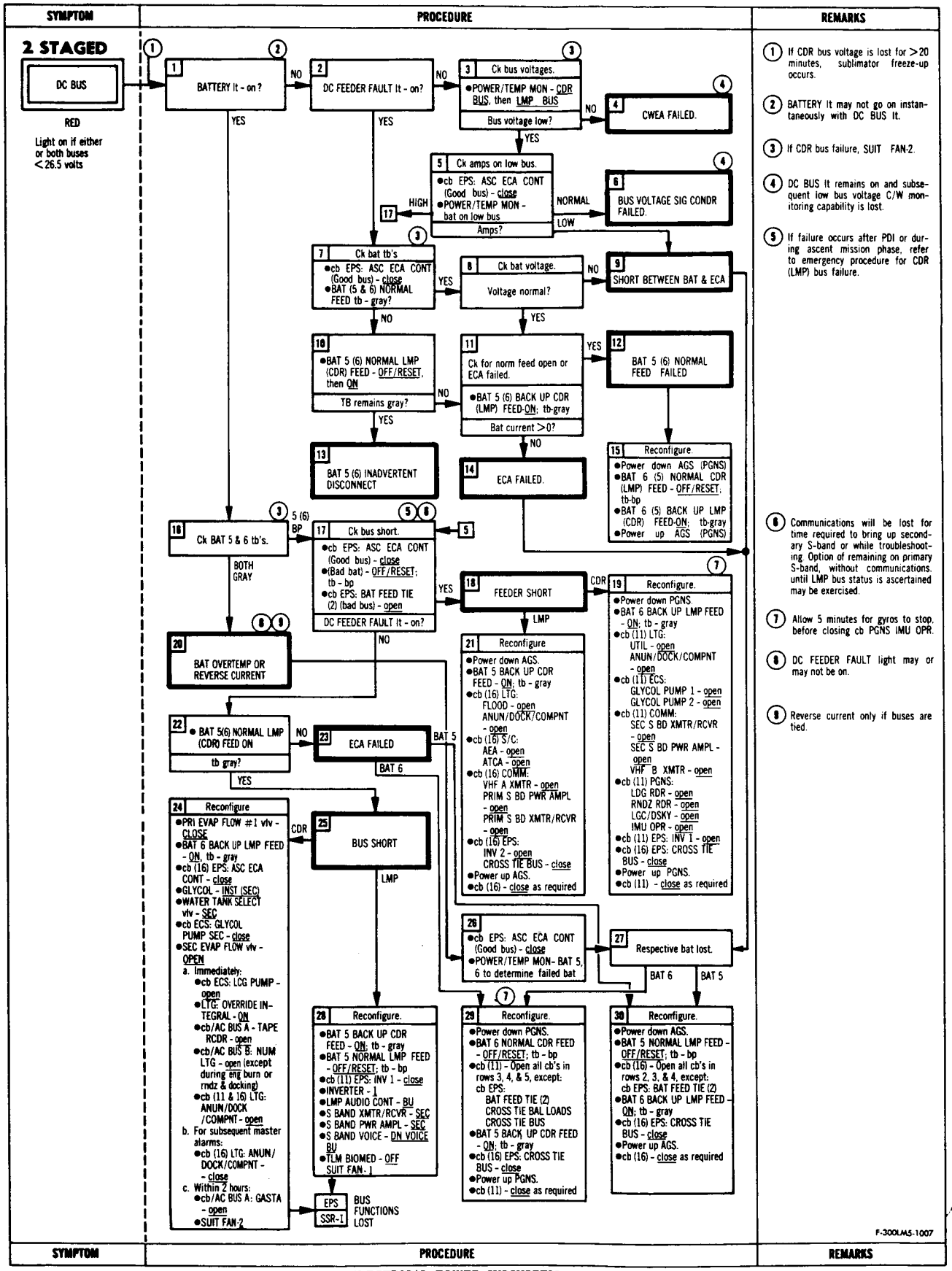
SYMPTOM
PROCEDURE
REMARKS
2 STAGED
DC BUS
RED
Light on if either or both buses < 26.5 volts
1 BATTERY It - on?
NO
YES
2 DC FEEDER FAULT It - on?
3 Ck bus voltages.
•POWER/TEMP MON - CDR BUS, then LMP BUS
Bus voltage low?
4 CWEA FAILED.
5 Ck amps on low bus.
•cb EPS: ASC ECA CONT (Good bus) - close
•POWER/TEMP MON - bat on low bus
Amps?
HIGH
NORMAL
LOW
6 BUS VOLTAGE SIG CONDR FAILED.
7 Ck bat tb's
•cb EPS: ASC ECA CONT (Good bus) - close
•BAT (5 & 6) NORMAL FEED tb - gray?
8 Ck bat voltage.
Voltage normal?
9 SHORT BETWEEN BAT & ECA
10 •BAT 5 (6) NORMAL LMP (CDR) FEED - OFF/RESET, then ON
TB remains gray?
11 Ck for norm feed open or ECA failed.
•BAT 5 (6) BACK UP CDR (LMP) FEED-ON; tb-gray
Bat current >0?
12 BAT 5 (6) NORMAL FEED FAILED
13 BAT 5 (6) INADVERTENT DISCONNECT
14 ECA FAILED.
15 Reconfigure.
•Power down AGS (PGNS)
•BAT 6 (5) NORMAL CDR (LMP) FEED - OFF/RESET, tb-bp
•BAT 6 (5) BACK UP LMP (CDR) FEED-ON; tb-gray
•Power up AGS (PGNS)
16 Ck BAT 5 & 6 tb's.
5 (6) BP
BOTH GRAY
17 Ck bus short.
•cb EPS: ASC ECA CONT (Good bus) - close
•(Bad bat) - OFF/RESET; tb - bp
•cb EPS: BAT FEED TIE (2) (bad bus) - open
DC FEEDER FAULT It - on?
18 FEEDER SHORT
CDR
LMP
19 Reconfigure.
•Power down PGNS.
•BAT 6 BACK UP LMP FEED - ON; tb - gray
•cb (11) LTG:
UTIL - open
ANUN/DOCK/COMPNT - open
•cb (11) ECS:
GLYCOL PUMP 1 - open
GLYCOL PUMP 2 - open
•cb (11) COMM:
SEC S BD XMTR/RCVR - open
SEC S BD PWR AMPL - open
VHF B XMTR - open
•cb (11) PGNS:
LDG RDR - open
RNDZ RDR - open
LGC/DSKY - open
IMU OPR - open
•cb (11) EPS: INV 1 - open
•cb (16) EPS: CROSS TIE BUS - close
•Power up PGNS.
•cb (11) - close as required
20 BAT OVERTEMP OR REVERSE CURRENT
21 Reconfigure
•Power down AGS.
•BAT 5 BACK UP CDR FEED - ON; tb - gray
•cb (16) LTG:
FLOOD - open
ANUN/DOCK/COMPNT - open
•cb (16) S/C:
AEA - open
ATCA - open
•cb (16) COMM:
VHF A XMTR - open
PRIM S BD PWR AMPL - open
PRIM S BD XMTR/RCVR - open
•cb (16) EPS:
INV 2 - open
CROSS TIE BUS - close
•Power up AGS.
•cb (16) - close as required
22 • BAT 5(6) NORMAL LMP (CDR) FEED ON
tb gray?
23 ECA FAILED
BAT 5
BAT 6
24 Reconfigure
•PRI EVAP FLOW #1 vlv - CLOSE
•BAT 6 BACK UP LMP FEED - ON, tb - gray
•cb (16) EPS: ASC ECA CONT - close
•GLYCOL - INST (SEC)
•WATER TANK SELECT vlv - SEC
•cb ECS: GLYCOL PUMP SEC - close
•SEC EVAP FLOW vlv - OPEN
a. Immediately:
•cb ECS: LCG PUMP - open
•LTG: OVERRIDE INTEGRAL - ON
•cb/AC BUS A - TAPE RCDR - open
•cb/AC BUS B: NUM LTG - open (except during eng burn or rndz & docking)
•cb (11 & 16) LTG: ANUN/DOCK /COMPNT - open
b. For subsequent master alarms:
•cb (16) LTG: ANUN/DOCK/COMPNT - close
c. Within 2 hours:
•cb/AC BUS A: GASTA - open
•SUIT FAN 2
25 BUS SHORT
26 •cb EPS: ASC ECA CONT (Good bus) - close
•POWER/TEMP MON- BAT 5, 6 to determine failed bat
27 Respective bat lost.
28 Reconfigure.
•BAT 5 BACK UP CDR FEED - ON; tb - gray
•BAT 5 NORMAL LMP FEED - OFF/RESET; tb - bp
•cb (11) EPS: INV 1 - close
•INVERTER - 1
•LMP AUDIO CONT - BU
•S BAND XMTR/RCVR - SEC
•S BAND PWR AMPL - SEC
•S BAND VOICE - DN VOICE BU
•TLM BIOMED - OFF
SUIT FAN - 1
EPS
SSR-1
BUS FUNCTIONS LOST
29 Reconfigure.
•Power down PGNS.
•BAT 6 NORMAL CDR FEED - OFF/RESET; tb - bp
•cb (11) - Open all cb's in rows 3, 4, & 5, except:
cb EPS:
BAT FEED TIE (2)
CROSS TIE BAL LOADS
CROSS TIE BUS
•BAT 5 BACK UP CDR FEED - ON; tb - gray
•cb (16) EPS: CROSS TIE BUS - close
•Power up PGNS.
•cb (11) - close as required
30 Reconfigure.
•Power down AGS.
•BAT 5 NORMAL LMP FEED - OFF/RESET; tb - bp
•cb (16) - Open all cb's in rows 2, 3, & 4, except:
cb EPS: BAT FEED TIE (2)
•BAT 6 BACK UP LMP FEED - ON; tb - gray
•cb (16) EPS: CROSS TIE BUS - close
•Power up AGS.
•cb (16) - close as required
1 If CDR bus voltage is lost for >20 minutes, sublimator freeze-up occurs.
2 BATTERY It may not go on instantaneously with DC BUS It.
3 If CDR bus failure, SUIT FAN-2.
4 DC BUS It remains on and subsequent low bus voltage C/W monitoring capability is lost.
5 If failure occurs after PDI or during ascent mission phase, refer to emergency procedure for CDR (LMP) bus failure.
6 Communications will be lost for time required to bring up secondary S-band or while troubleshooting. Option of remaining on primary S-band, without communications, until LMP bus status is ascertained may be exercised.
7 Allow 5 minutes for gyros to stop, before closing cb PGNS IMU OPR.
8 DC FEEDER FAULT light may or may not be on.
9 Reverse current only if buses are tied.
F-300LM5-1007

SYMPTOM	PROCEDURE	REMARKS
3 STAGED OR UNSTAGED BATTERY YELLOW Light on if: Bat overtemperature > 145° Bat reverse current > 10 amp for 4 to 6 sec Bat overcurrent > 150 to 200 amp	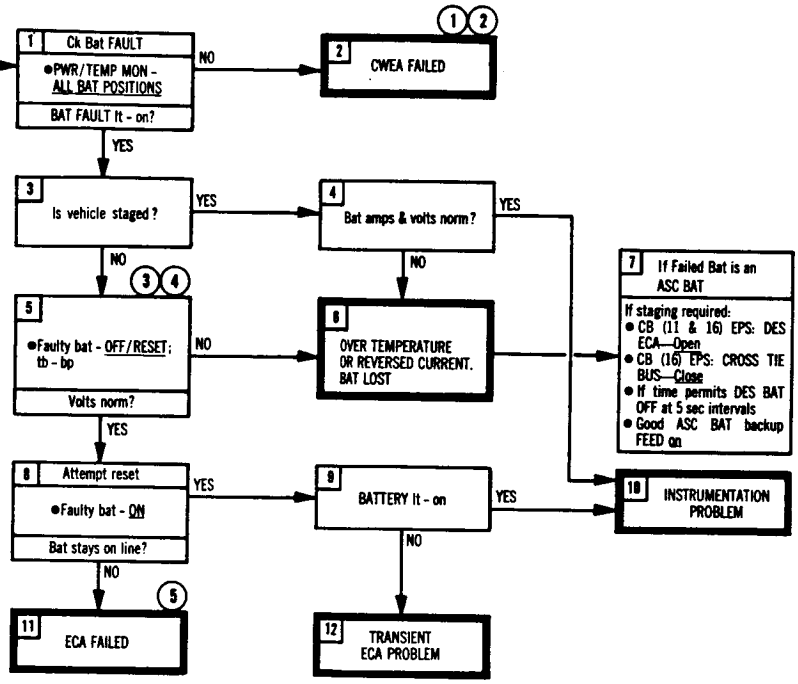	(1) Bat C/W monitoring capability is lost. (2) Subsequent battery malfunction monitoring capability is lost. However, BAT FAULT lt operates normally. (3) Faulty bat may have tripped OFF-LINE. (4) Hold battery switch to OFF/RESET for at least 4 seconds to ensure resetting of BATTERY caut lt. (5) Functions lost: 1. If failure associated with BAT 1, 2, 3 or 4 - BAT 1, 2, 3 or 4 is lost. 2. If failure associated with lunar bat - lunar bat is available on opposite feed path. Batt warning light may remain ON and other battery malfunctions will be inhibited.
4 STAGED (1)		(1) Deleted.

F-300LM4-1009

SYMPTOM	PROCEDURE	REMARKS

SYMPTOM	PROCEDURE	REMARKS

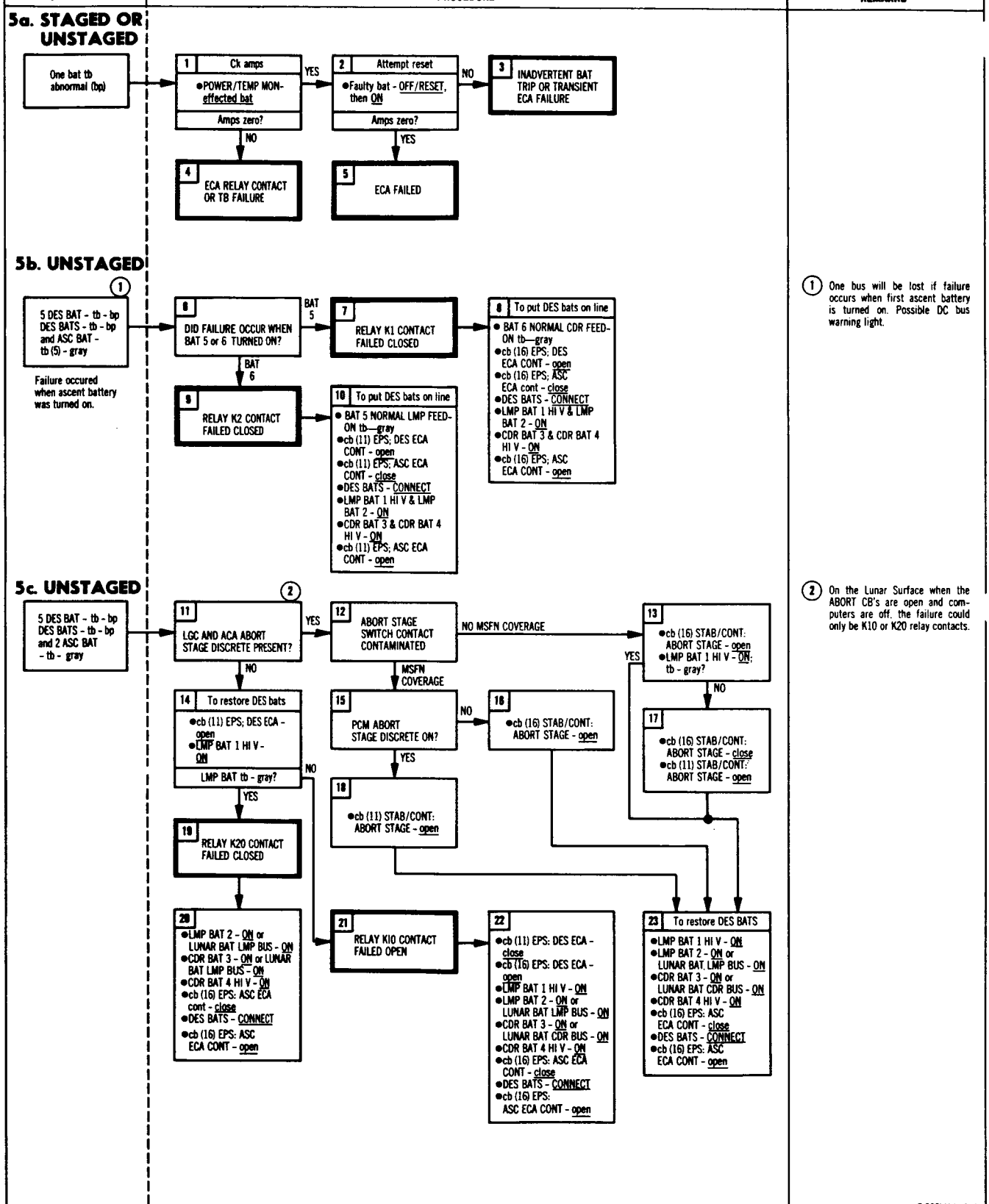

(1) One bus will be lost if failure occurs when first ascent battery is turned on. Possible DC bus warning light.

(2) On the Lunar Surface when the ABORT CB's are open and computers are off, the failure could only be K10 or K20 relay contacts.

C-300LM4-1010

SYMPTOM	PROCEDURE	REMARKS

LM986A

SYMPTOM	PROCEDURE	REMARKS

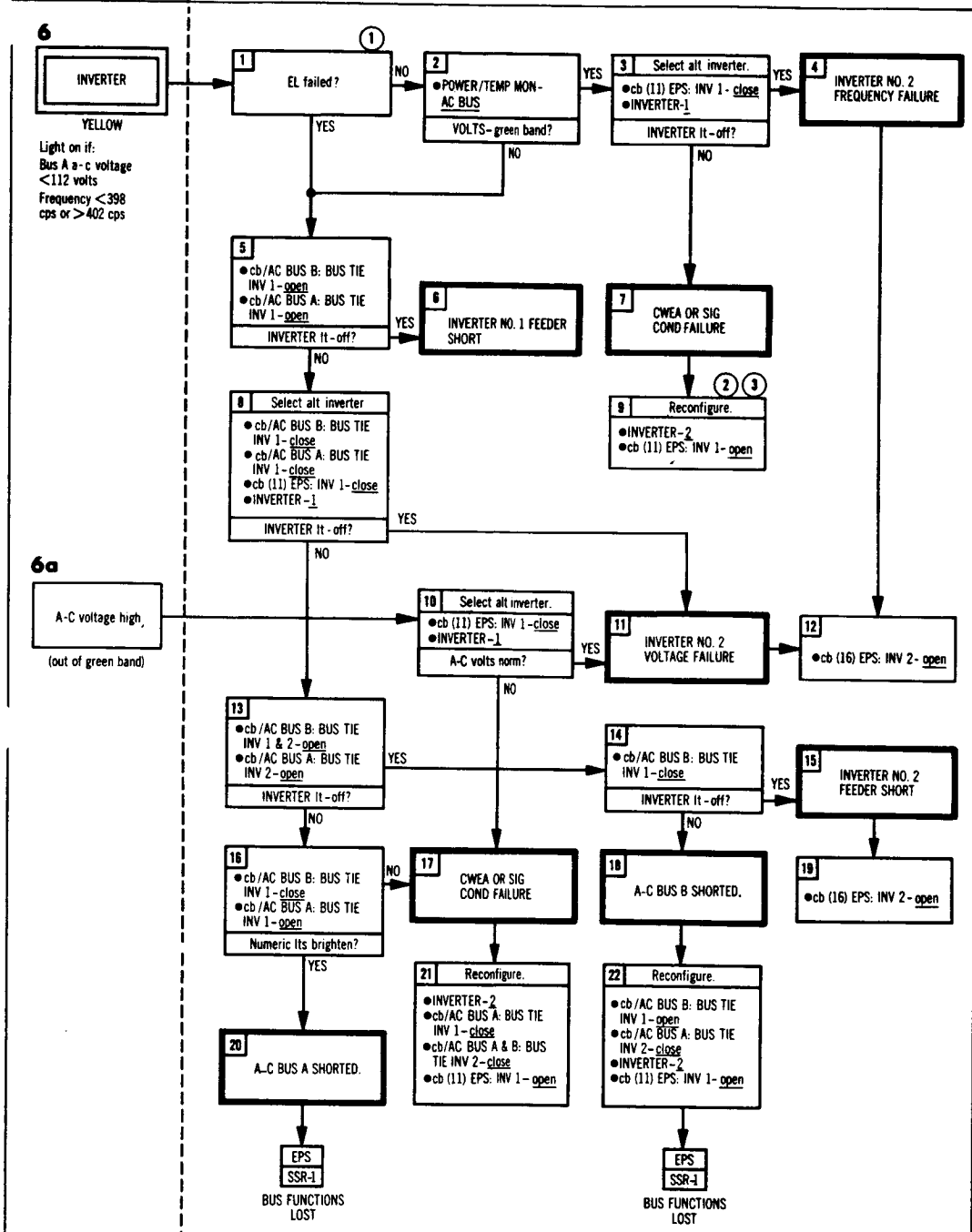

(1) Assumption: Inverter No. 2 is on. If inverter No. 1 is operating, replace all references to inverter No. 2 with inverter No. 1.

(2) INVERTER lt remains on.

(3) Monitor a-c voltage on VOLTS ind.

A-300LM10-9025

SYMPTOM	PROCEDURE	REMARKS

SPECIAL SUBROUTINE

SSR-1

Bus functions lost

AC BUS B

AC BUS B: SE WIND HTR
He/PQGS PROPUL DISP
He MON
DES QTY
S BD ANT
Auto/man ant slew
ORDEAL
AGS
AGS att mon & AGS ORB RATE
ACT LAMP (R)
SE FDAI
NUM LTG
BUS TIE INV 2
BUS TIE INV 1

AC BUS A

AC BUS A: BUS TIE INV 2
BUS TIE INV 1
AC BUS VOLT
AC bus monitor
CDR WIND HTR
TAPE RCDR
AOT LAMP (R)
RNDZ RDR
Auto/man ant slew
DECA GMBL
GDA lock-up
Limited manual throttle capability
INTGL LTG
CDR FDAI
GASTA
PGNS att & PGNS ORB RATE
RNG/RNG RT ALT/ALT RT ind

CDR BUS

FLT DISP: ORDEAL
COAS
CDR FDAI & alt needles
GASTA
PGNS alt & rate needles
RNG/RNG RT ALT/ALT RT meter
CDR X - PNTR
MISSION TIMER
THRUST meter

RCS SYS A: ASC FEED 1
Last position
ASC FEED 2
Last position
QUAD 1 TCA
QUAD 2 TCA
QUAD 3 TCA
QUAD 4 TCA
} Thrusters lost
MAIN SOV
Last position

CDR BUS (cont)

HTR: URINE LINE heaters
RNDZ RDR STBY heaters
RNDZ RDR OPR heaters
LDG RDR heater
DOCK window heater
AOT heater

INST: SIG CONDR 1
Propellant tb's
Some ind
Some CWEA lts come on

STAB/CONT: ABORT STAGE (R, except no auto eng arm)
ATCA PGNS
LGC controlof RCS
ability to switch from AGS to PGNS
AELD (R)
ENG CONT
DPS on capability except override ENG
STOP for DPS & APS AGS GMBL Trim
ATT DIR CONT
Secondary Coils AGS Pulse mode
ENG START OVRD
Manual start (DPS & APS)
DECA PWR
Auto & Manual DPS "on" & "off"
(Override only available) DPS
throttle (100%)

ED: LDG GEAR FLAG
LOGIC PWR A
UTIL
LTG: ANUN/DOCK/COMPNT
Lighting (R)

PGNS: IMU OPR
IMU STBY
LGC/DSKY
RNDZ RDR
LDG RDR
SIG STR DISP

COMM: CDR AUDIO center
VHF A RCVR
VHF B XMTR
SEC S BD PWR AMPL
SEC S BD XMTR/RCVR
UP DATA LINK

ECS: GLYCOL PUMP AUTO TRNFR
GLYCOL PUMP 1
GLYCOL PUMP 2
CABIN FAN
SUIT FAN 1

HTR RCS SYS A/B 1: QUAD 1 heater
QUAD 2 heater
QUAD 3 heater
QUAD 4 heater

EPS: DES ECA CONT (R)
DES ECA (R)
ASC ECA CONT (R)
ASC ECA (R)
INV 1
DC BUS VOLT

PROPUL: DES He REG/VENT
VENT - last position

LMP BUS

FLT DISP: EVENT TIMER/SE FDAI &
rate needles
SE X-PNTR

RCS SYS B: ASC FEED 1
Last position
ASC FEED 2
Last position

QUAD 1 TCA
QUAD 2 TCA
QUAD 3 TCA
QUAD 4 TCA
} Thrusters lost
CRSFD
Last position
TEMP/PRESS DISP FLAG
PQGS DISP
RCS qty
MAIN SOV
Last position

PROPUL: DISP/ENG OVRD LOGIC
MPS ind inoperative
PQGS
FUEL/OXID qty
ASC He REG
Last position

INST: SIG CONDR 2
EPS tb's
Some ind
Some CWEA lts come on
PCM/TE
TM XMT
Timing signals
SIG SENSOR
CWEA

STAB/CONT: DES ENG OVRD
Override function
ATCA (AGS)
AGS stab cont ability to switch from
PGNS to AGS
ABORT STAGE
ASC ENG "ON" & arming
ATCA
RR SLEW & AUTO TRACK Modes
AGS stab Cont
FDAI Rate needles
Auto ASC ENG "on"
DPS Gmbl locked
Throttle goes to 100%
AELD (R)
Auto APS commands
ASA
AGS
ENG ARM
Auto engine on/off
(OPS & APS)
AEA
AGS

ED: LOGIC PWR B
Descent Engine override function

LTG: MASTER ALARM
ANUN/DOCK/COMPNT (R)
TRACK light
FLOOD lighting

COMM: DISP
S-bd ant
SE AUDIO
VHF A XMTR
VHF B RCVR
PRIM S BD PWR AMPL
PRIM S BD XMTR/RCVR
S BD ANT
Auto/man ant slew
PMP
VHF rcv
S-bd xmtr/rcv
TV

ECS: SUIT FLOW CONT
Torn-suit protection
DISP
GLYCOL PUMP SEC
CABIN FAN CONT
CABIN REPRESS
Auto repress
SUIT FAN 2
SUIT FAN ΔP
DIVERT VLV
Auto close
CO_2 SENSOR

EPS: DES ECA CONT (R)
DES ECA (R)
ASC ECA CONT (R)
ASC ECA (R)
INV 2
DC BUS VOLT
DISP
Volts/amps
Tb's

CAMR: SEQ

HTR RCS SYS A/B 2: S-BD ANT heater
DISP
QUAD 4 heater
QUAD 3 heater
QUAD 2 heater
QUAD 1 heater
MESA heaters

B-300LM4-1039

5.2.9 COMMUNICATIONS SUBSYSTEM

5.2.9.1 Assumptions

- Troubleshooting procedures such as checking sw's, cb's, redundant PTT pb's, redundant mode (VOX, PTT) alternative antennas, etc. are performed before entering malfunction procedures.
- These malfunction procedures do not assume a particular Communications Subsystem sw configuration other than that required to operate the equipment before entry into the procedures.
- Malfunction procedures are entered from normal operational modes. (Procedures are not included for checkout modes.)

Table 5-9. CS Procedure Entry Sheet

Symptom	Sym No.	Page No.
Loss of ICS	1	5.2-44
One crewman has abnormal (unselected) hot mike	2	5.2-44
Loss of VHF voice comm with CSM	3	5.2-44
Loss of S-band voice comm	4	5.2-45
S BD RCVR caut lt	5	5.2-46
Cannot acquire phaselock	5a	5.2-46
MSFN reports loss of PCM. S-band voice OK	6	5.2-46
Loss of voice comm with EVA (one man EVA)	7	5.2-47
CSM informs LM of VHF ranging loss	8	5.2-48

SYMPTOM	PROCEDURE	REMARKS

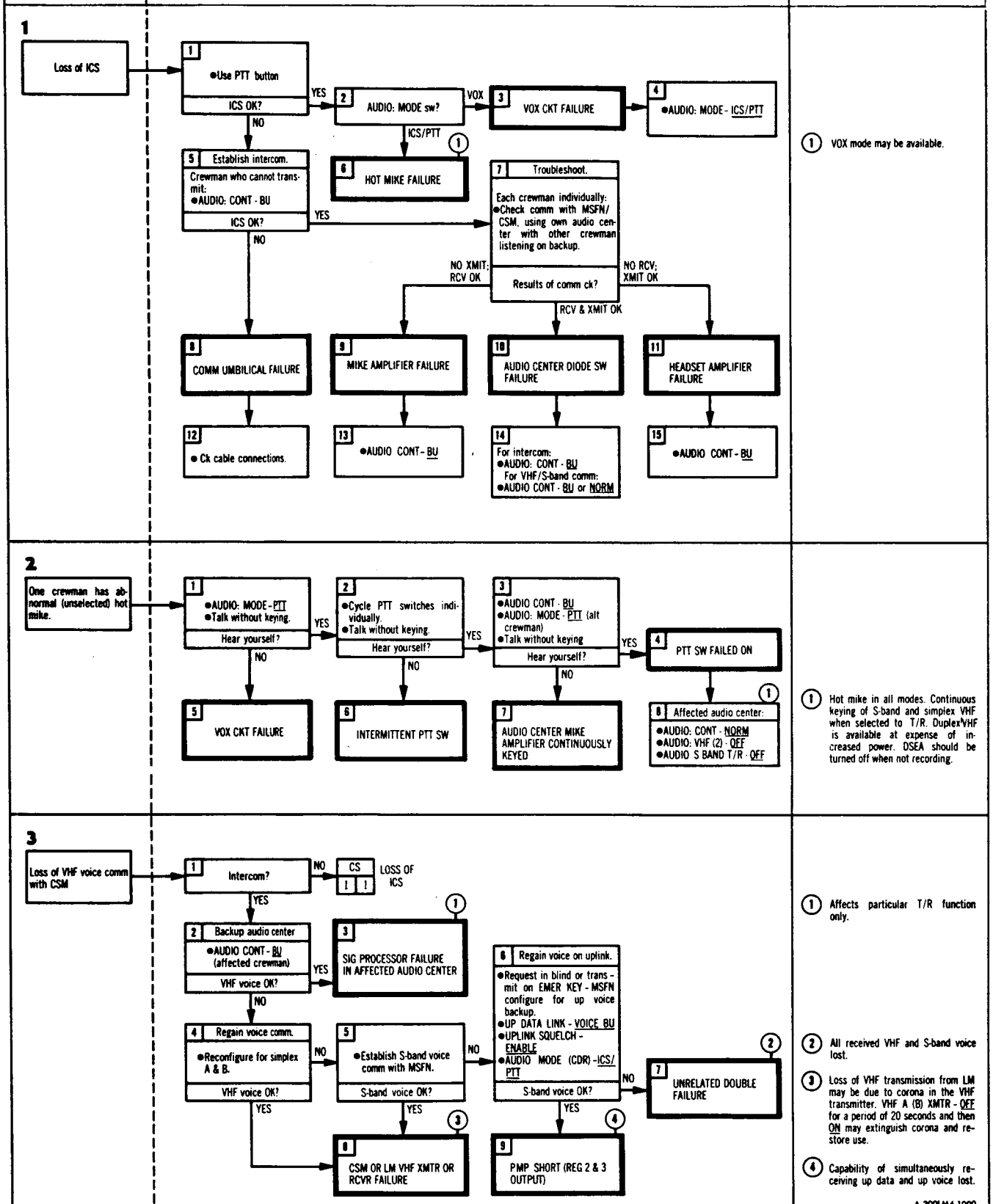

REMARKS
(1) VOX mode may be available.
(1) Hot mike in all modes. Continuous keying of S-band and simplex VHF when selected to T/R. Duplex/VHF is available at expense of increased power. DSEA should be turned off when not recording.
(1) Affects particular T/R function only.
(2) All received VHF and S-band voice lost.
(3) Loss of VHF transmission from LM may be due to corona in the VHF transmitter. VHF A (B) XMTR - OFF for a period of 20 seconds and then ON may extinguish corona and restore use.
(4) Capability of simultaneously receiving up data and up voice lost.
A-300LM4-1000

SYMPTOM	PROCEDURE	REMARKS

SYMPTOM	PROCEDURE	REMARKS

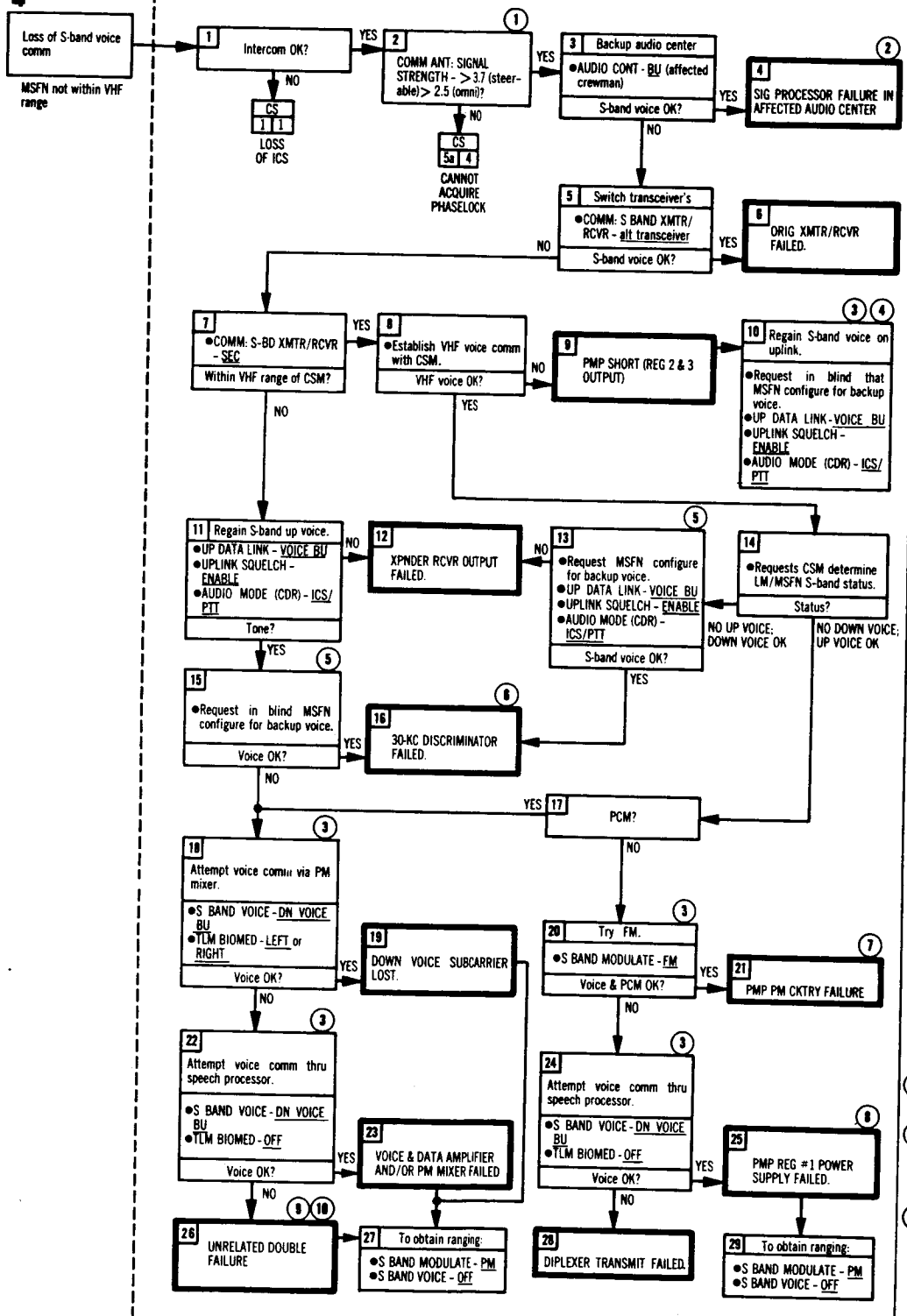

REMARKS

1. Loss or near loss of up voice is indicated by COMM ANT: SIGNAL STRENGTH - <3.7 (steerable) or <2.5 (omni) and noise in headset if S-band squelch is off.
2. Affects particular T/R function only
3. Allow 30 seconds to reacquire phaselock.
4. All S-band up voice is lost. Voice contact with MSFN is available through CSM relay mode.
5. Requires ≈3 minutes.
6. Up voice is available through up data link only. Simultaneous up voice and up data capability lost.
7. Ranging lost while in FM.
8. Down voice subcarrier operational instrumentation, PCM data, PM control, and FM control lost.
9. Biomed data lost.
10. Emergency keying is still available (cb (16) COMM: PMP must be open).

B-300LM5-1001

SYMPTOM	PROCEDURE	REMARKS

SYMPTOM	PROCEDURE	REMARKS
5 S BD RCVR YELLOW Light on if AGC <1.0 **5a** Cannot acquire phase-lock Signal strength <1.3	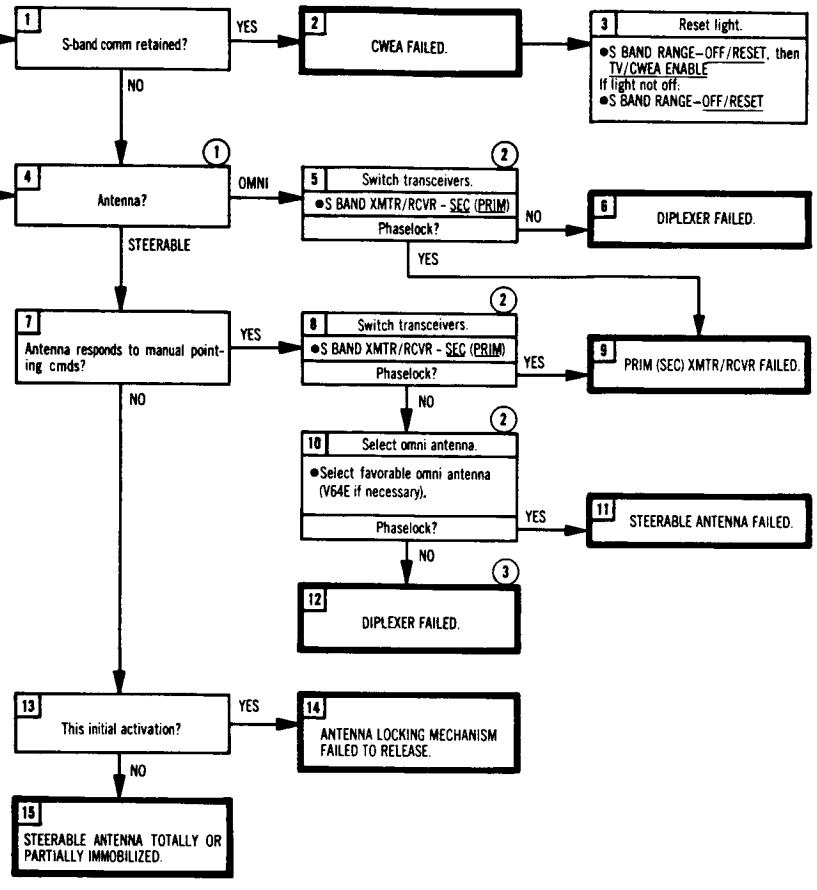	(1) Assumption: VHF voice contacts with CSM were attempted. (2) Allow 30 seconds for phaselock acquisition. (3) All S-band functions lost.
6 MSFN reports loss of PCM. S-band voice OK	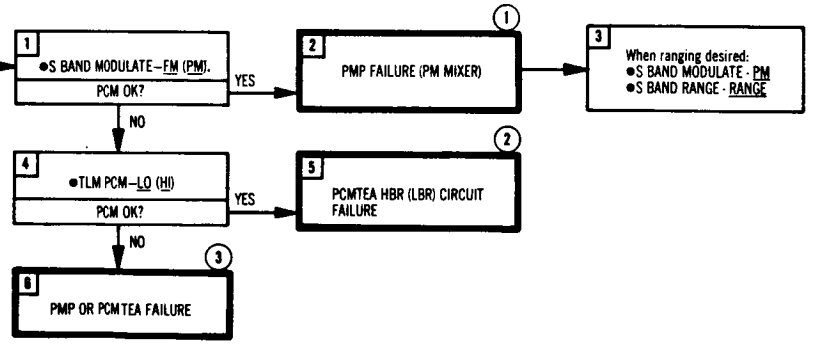	(1) Simultaneous ranging and PCM capability lost. (2) HBR (LBR) PCM lost. (3) S-band telemetry lost.

300LM5-10C

SYMPTOM	PROCEDURE	REMARKS

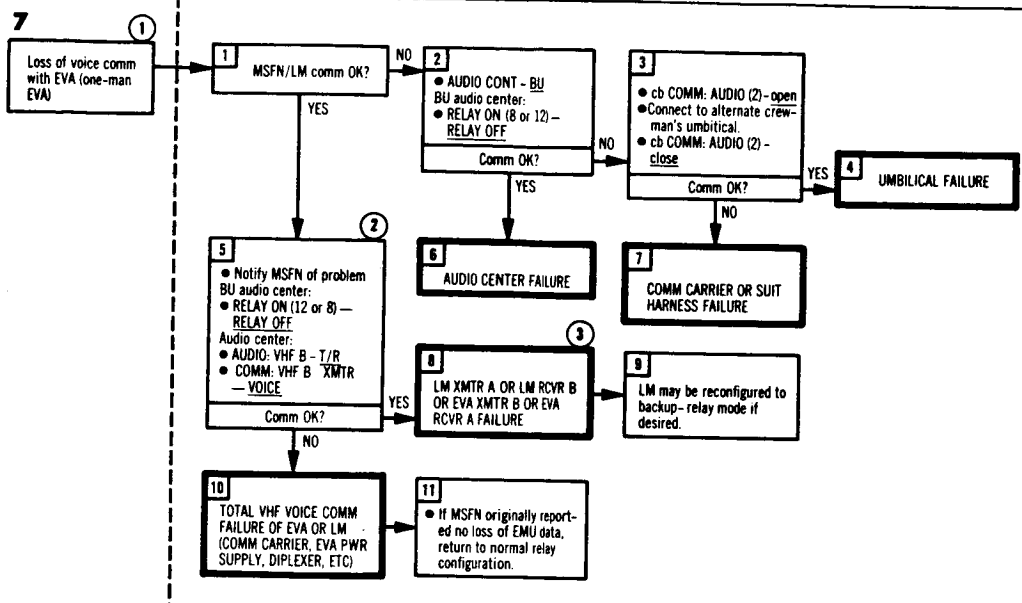

(1) EVA will wait at least 3 minutes following communications loss before changing modes.

(2) Configures LM for transmission and reception on both VHF frequencies.

(3) Loss of EMU data relay capability.

A-300LM5-1051

SYMPTOM	PROCEDURE	REMARKS

SYMPTOM	PROCEDURE	REMARKS

8

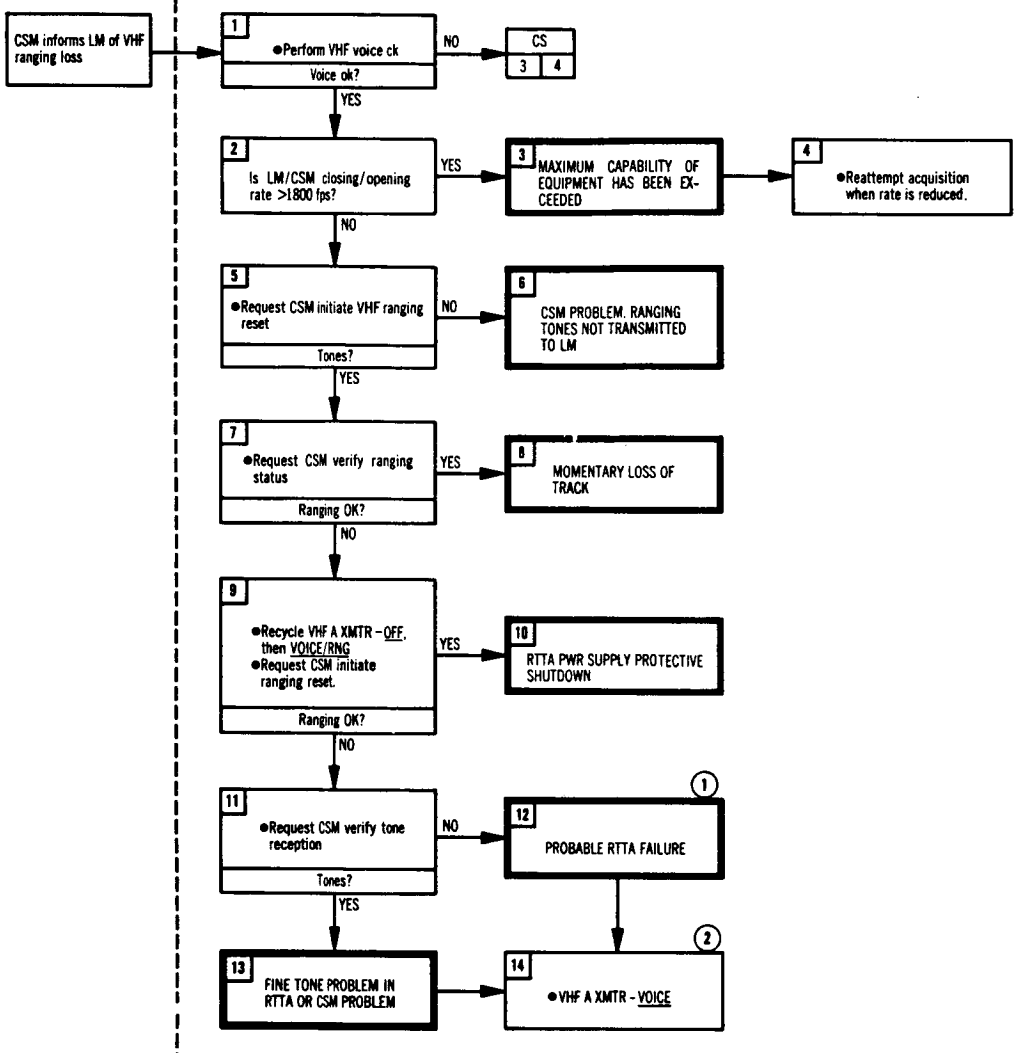

(1) If RTTA failure has resulted in 100% duty cycle on xmtr A, ranging operation, in excess of 2 min at temperatures >67°F indicated on ECS: GLYCOL temp ind, may result in xmtr damage. 67°F on ECS: GLYCOL temp ind equals 100°F at ERA flange.

(2) Switching out range capability will enhance voice capability.

300LM8-20A

SYMPTOM	PROCEDURE	REMARKS

5.2.10 ENVIRONMENTAL CONTROL SUBSYSTEM

Table 5-10. ECS Procedure Entry Sheet

Symptom	Sym No.	Page No.
H2O QUANTITY low or decr abnormally	1	5.2-50
CABIN warn lt	2	5.2-50A
CABIN PRESS - low or decr	2a	5.2-50A
CABIN PRESS - high	3	5.2-51
SUIT/FAN warn lt	4	5.2-52
SUIT PRESS - low	4a	5.2-52
SUIT PRESS - high (egress mode)	5	5.2-52
O2 QTY caut lt	6	5.2-53
O2 QUANTITY - low or decr	6a	5.2-53
ECS caut lt	7	5.2-54
SUIT FAN lt	7a	5.2-54
H2O SEP lt	7b	5.2-54
CO2 lt	7c	5.2-54A
PART PRESS CO2 - high	7d	5.2-54A
GLYCOL comp lt	7e	5.2-54A
GLYCOL caut lt	8	5.2-55
GLYCOL temp - high or incr	8a	5.2-55
GLYCOL comp lt	9	5.2-56
GLYCOL press - low or decr	10	5.2-56

SYMPTOM	PROCEDURE	REMARKS

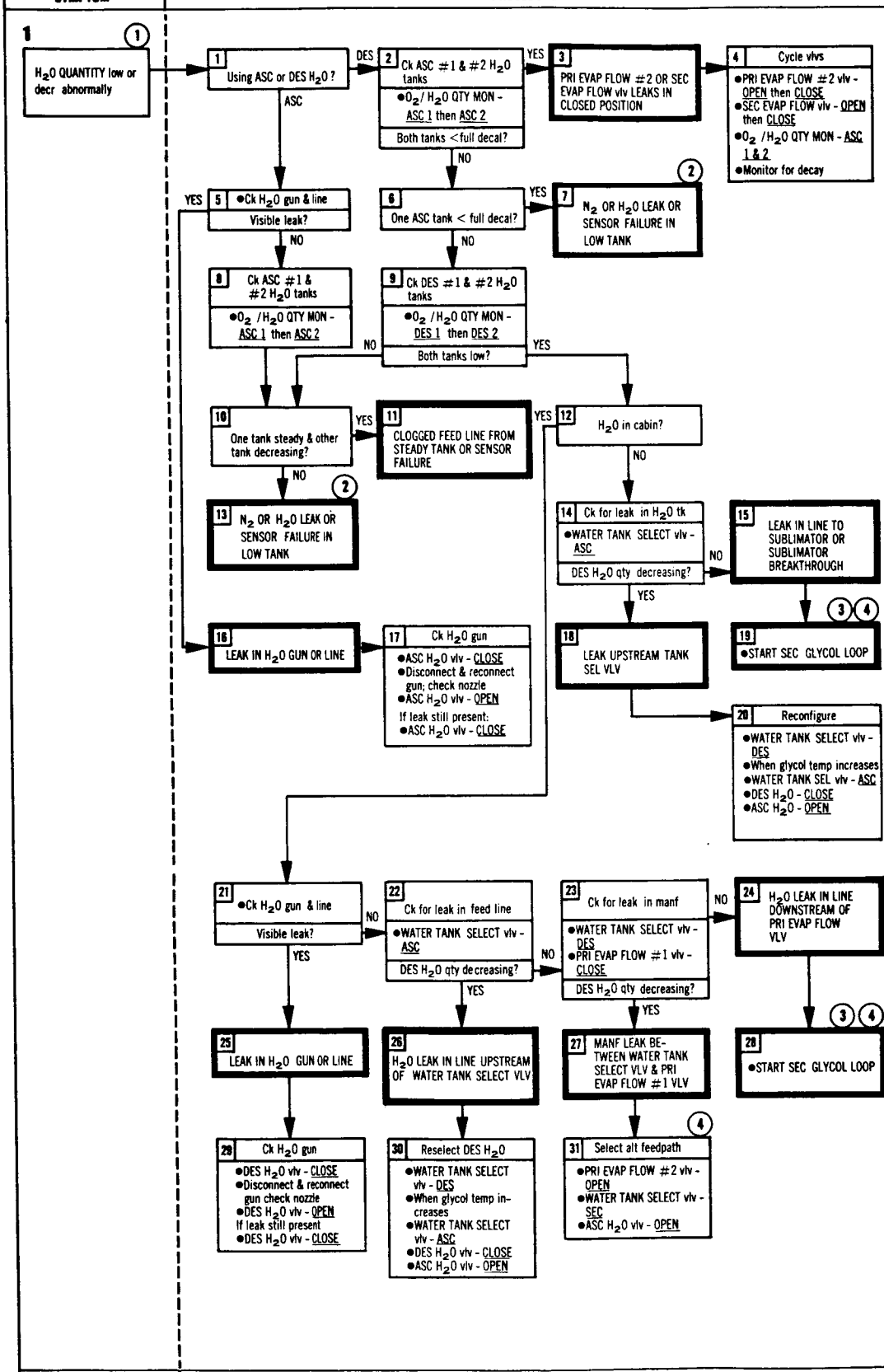

(1) Assumption: No indicator failure. MSFN can verify indicator failure by reading pressure sensors via telemetry.

(2) MSFN can determine sensor failure when WATER TANK SELECT vlv - ASC for ≈ 1 hour.

(3) Activate secondary glycol loop:

- •PRI EVAP FLOW #1 vlv - CLOSE
- •WATER TANK SELECT vlv - SEC
- •ASC H_2O vlv - OPEN
- •GLYCOL - INST (SEC)
- •cb (16) ECS: GLYCOL PUMP SEC - close
- •SEC EVAP FLOW vlv - OPEN

a. Immediately after activating secondary glycol loop:
- •cb ECS: LCG PUMP - open
- •cb/AC BUS A: TAPE RCDR - open
- •LTG: OVERRIDE INTEGRAL - ON
- •cb/AC BUS B: NUM LTG - open, except during eng burn or rendezvous or docking maneuvers
- •cb (11 & 16) LTG: ANUN/DOCK/COMPNT - open

For subsequent master alarms, one ANUN/DOCK/COMPNT cb must be closed momentarily to enable C/W lights

b. At MSFN request:
- •cb PGNS:
  - IMU OPR - open
  - LGC/DSKY - open

c. Within 2 hours:
- •cb/AC BUS A: GASTA - open
- •cb FLT DISP: GASTA - open
- •cb COMM: UP DATA LINK - open

(4) Close DES H_2O valve prior to staging

300LM10-9027

SYMPTOM	PROCEDURE	REMARKS

SYMPTOM	PROCEDURE	REMARKS

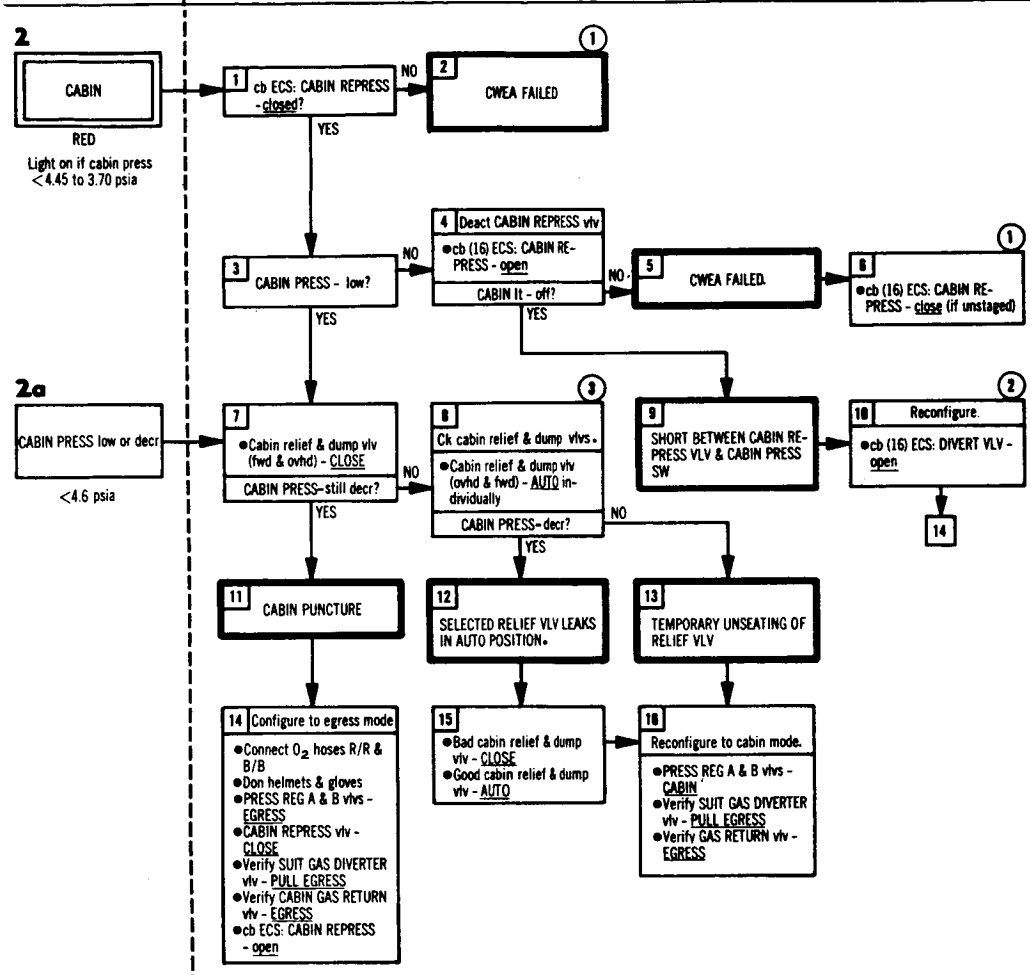

(1) C/W monitoring of cabin pressure is lost. Monitor CABIN PRESS.

(2) Automatic cabin-repressurization capability lost. Automatic closing of SUIT GAS DIVERTER vlv lost. CABIN lt inoperative.

(3) If unstaged, or if staged and ascent O_2 quantity is sufficient to make up cabin pressure:
•CABIN REPRESS vlv - MANUAL until cabin pressure is normal.
If not, configure to egress mode per step 14.

F-300LM5-1033

SYMPTOM	PROCEDURE	REMARKS

SYMPTOM	PROCEDURE	REMARKS

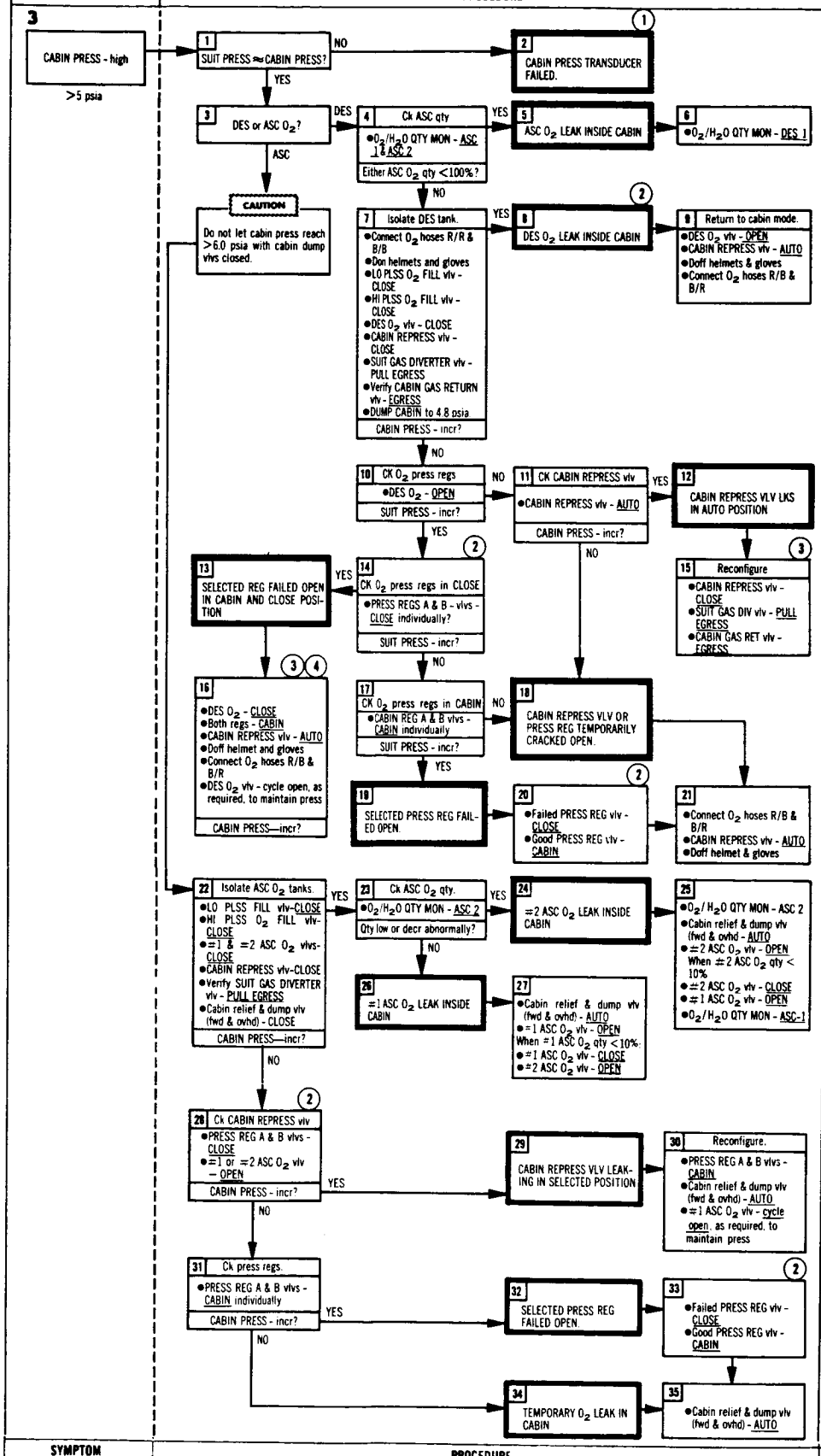

1 In cabin mode, suit pressure can be used to monitor cabin pressure.

2 When placing PRESS REG A and/or B vlv-CLOSE, ensure handle is rotated to full hard stop position.

3 Automatic cabin-repressurization capability not available. Don helmet and gloves.

4 Cabin puncture protection auto repress not automatic when DES O_2 vlv - CLOSE

SYMPTOM	PROCEDURE	REMARKS

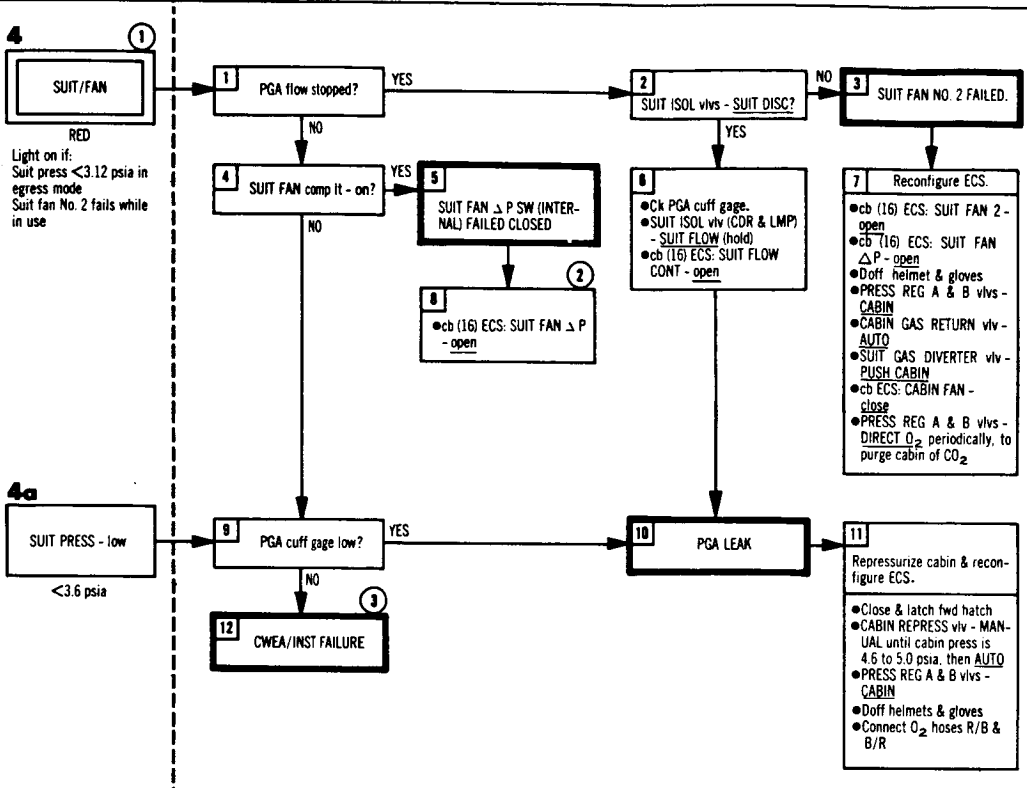

1. Assumptions: (1) Suit warning: suit fan No. 1 is in operation; and (2) fan warning: suit fan No. 1 is inoperative.
2. No suit/fan C/W inputs to SUIT FAN comp lt, ECS lt, and SUIT/FAN warn lt.
3. O_2 flow is only indication of fan operation. C/W monitoring of suit protection lost. SUIT/FAN warn lt inoperative. Use SUIT/FAN comp lt as indication of fan failure.

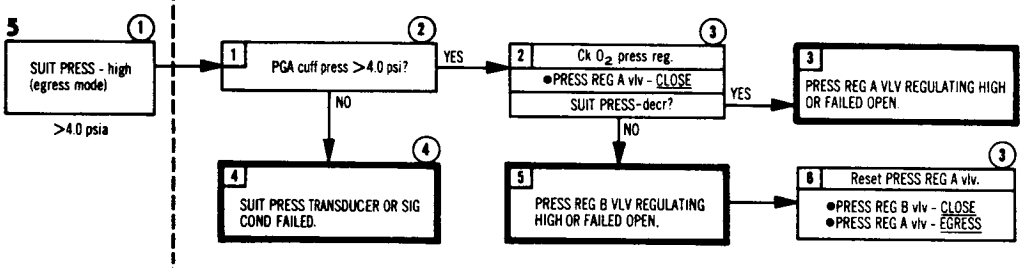

1. Assumption: Cabin is depressurized and CABIN REPRESS vlv - CLOSE.
2. Suit loop pressure is limited to 4.3 psi by SUIT CIRCUIT RELIEF vlv.
3. When placing PRESS REG A and/or B vlv-CLOSE, ensure handle is rotated to full hard stop position.
4. SUIT PRESS is erroneous. Use PGA cuff pressure gage.

C-300LM4-102

SYMPTOM	PROCEDURE	REMARKS

LM 2001, LM 2003

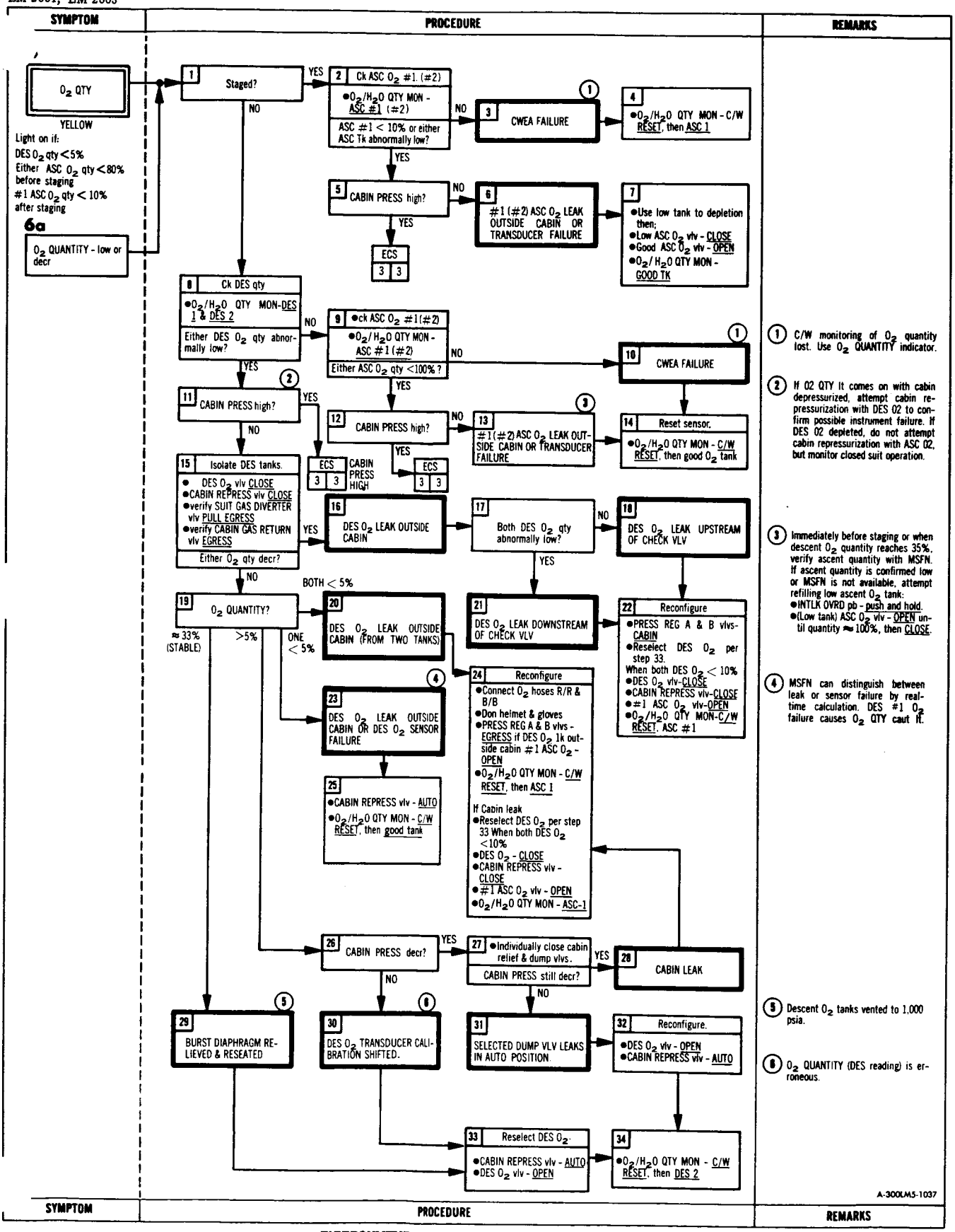

SYMPTOM	PROCEDURE	REMARKS

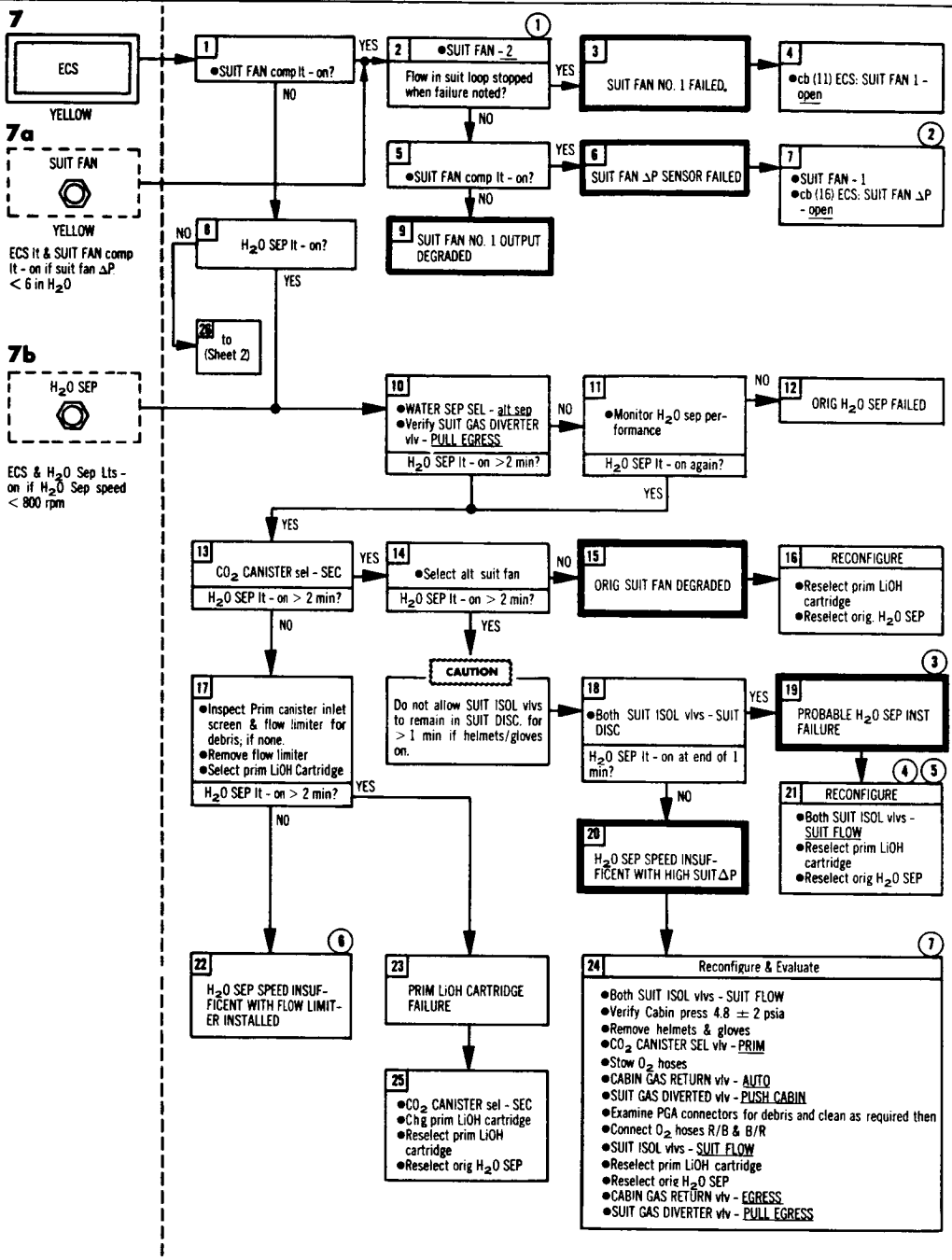

(1) Assumption: Suit fan No. 1 in use.

(2) Suit fan input to CWEA inoperative. Fan failure detected by reduced suit flow and H_2O SEP lt.

(3) Use component caution lights and appropriate indicator for subsequent failure.

(4) Crew comfort is only indicator of H_2O separator performance.

(5) H_2O SEP component caution lt & ECS caution lt will remain on, use component lts & indicators for suit fan, Glycol pump & Hi CO_2 failures.

(6) H_2O SEP lt may come on again if excessive amount of debris was found in prim canister inlet screen during inspection.

(7) Consuult MSFN if no debris is evident.

C-300LM3-103

SYMPTOM	PROCEDURE	REMARKS

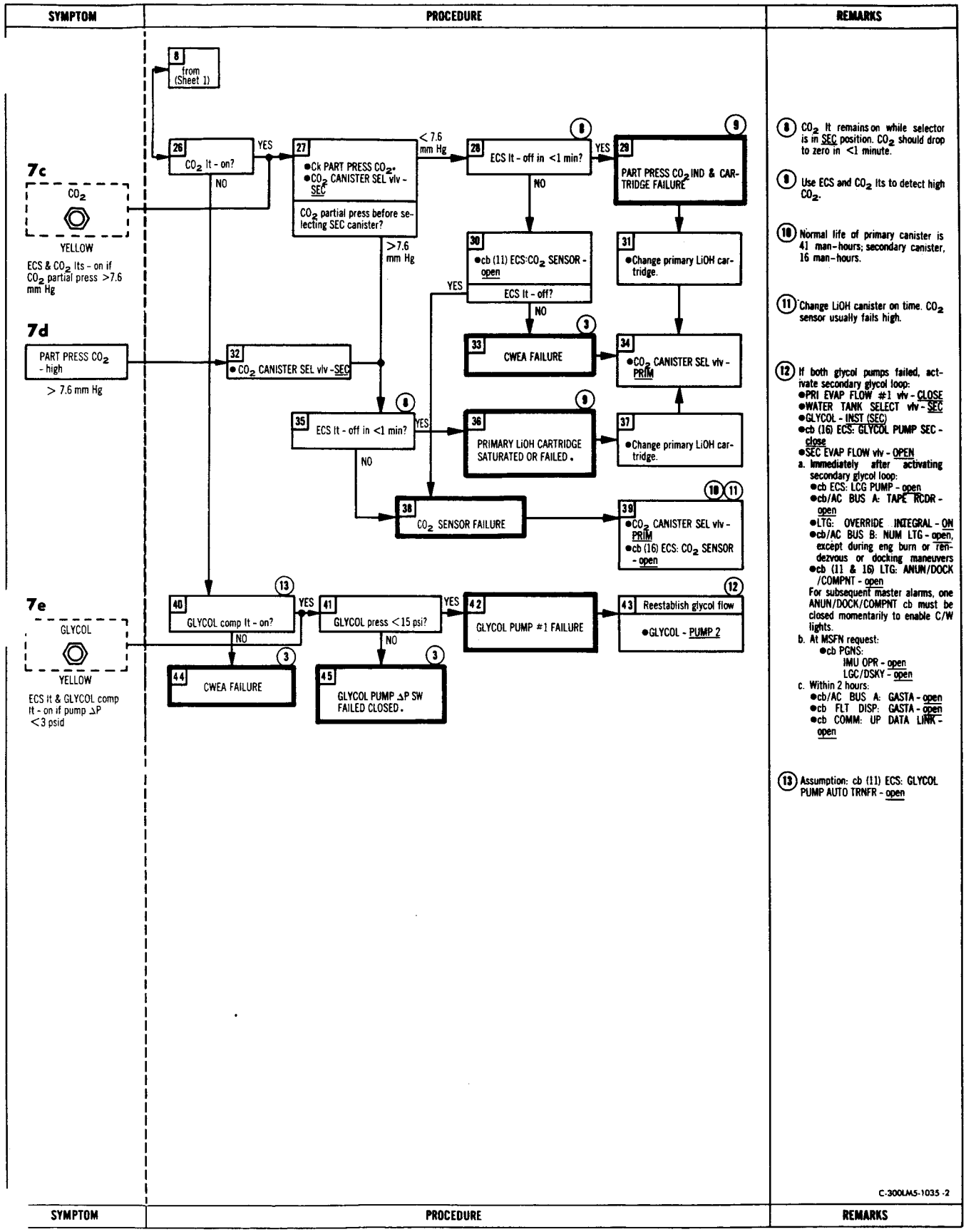
SYMPTOM
PROCEDURE
REMARKS
8 from (Sheet 1)
7c
CO_2
YELLOW
ECS & CO_2 lts - on if CO_2 partial press >7.6 mm Hg
7d
PART PRESS CO_2 - high
> 7.6 mm Hg
7e
GLYCOL
YELLOW
ECS lt & GLYCOL comp lt - on if pump ΔP <3 psid
26 CO_2 lt - on?
YES
NO
27 •Ck PART PRESS CO_2. •CO_2 CANISTER SEL vlv - SEC
CO_2 partial press before selecting SEC canister?
< 7.6 mm Hg
>7.6 mm Hg
28 ECS lt - off in <1 min?
8
YES
NO
29 PART PRESS CO_2 IND & CARTRIDGE FAILURE
9
30 •cb (11) ECS:CO_2 SENSOR - open
ECS lt - off?
YES
NO
31 •Change primary LiOH cartridge.
33 CWEA FAILURE
3
34 •CO_2 CANISTER SEL vlv - PRIM
32 •CO_2 CANISTER SEL vlv - SEC
35 ECS lt - off in <1 min?
8
YES
NO
36 PRIMARY LiOH CARTRIDGE SATURATED OR FAILED.
9
37 •Change primary LiOH cartridge.
38 CO_2 SENSOR FAILURE
39 •CO_2 CANISTER SEL vlv - PRIM •cb (16) ECS: CO_2 SENSOR - open
10 11
40 GLYCOL comp lt - on?
13
YES
NO
41 GLYCOL press <15 psi?
YES
NO
42 GLYCOL PUMP #1 FAILURE
43 Reestablish glycol flow •GLYCOL - PUMP 2
12
44 CWEA FAILURE
3
45 GLYCOL PUMP ΔP SW FAILED CLOSED.
3
8 CO_2 lt remains on while selector is in SEC position. CO_2 should drop to zero in <1 minute.
9 Use ECS and CO_2 lts to detect high CO_2.
10 Normal life of primary canister is 41 man-hours; secondary canister, 16 man-hours.
11 Change LiOH canister on time. CO_2 sensor usually fails high.
12 If both glycol pumps failed, activate secondary glycol loop:
•PRI EVAP FLOW #1 vlv - CLOSE
•WATER TANK SELECT vlv - SEC
•GLYCOL - INST (SEC)
•cb (16) ECS: GLYCOL PUMP SEC - close
•SEC EVAP FLOW vlv - OPEN
a. Immediately after activating secondary glycol loop:
•cb ECS: LCG PUMP - open
•cb/AC BUS A: TAPE RCDR - open
•LTG: OVERRIDE INTEGRAL - ON
•cb/AC BUS B: NUM LTG - open, except during eng burn or rendezvous or docking maneuvers
•cb (11 & 16) LTG: ANUN/DOCK /COMPNT - open
For subsequent master alarms, one ANUN/DOCK/COMPNT cb must be closed momentarily to enable C/W lights.
b. At MSFN request:
•cb PGNS:
IMU OPR - open
LGC/DSKY - open
c. Within 2 hours:
•cb/AC BUS A: GASTA - open
•cb FLT DISP: GASTA - open
•cb COMM: UP DATA LINK - open
13 Assumption: cb (11) ECS: GLYCOL PUMP AUTO TRNFR - open
C-300LM5-1035-2
SYMPTOM
PROCEDURE
REMARKS

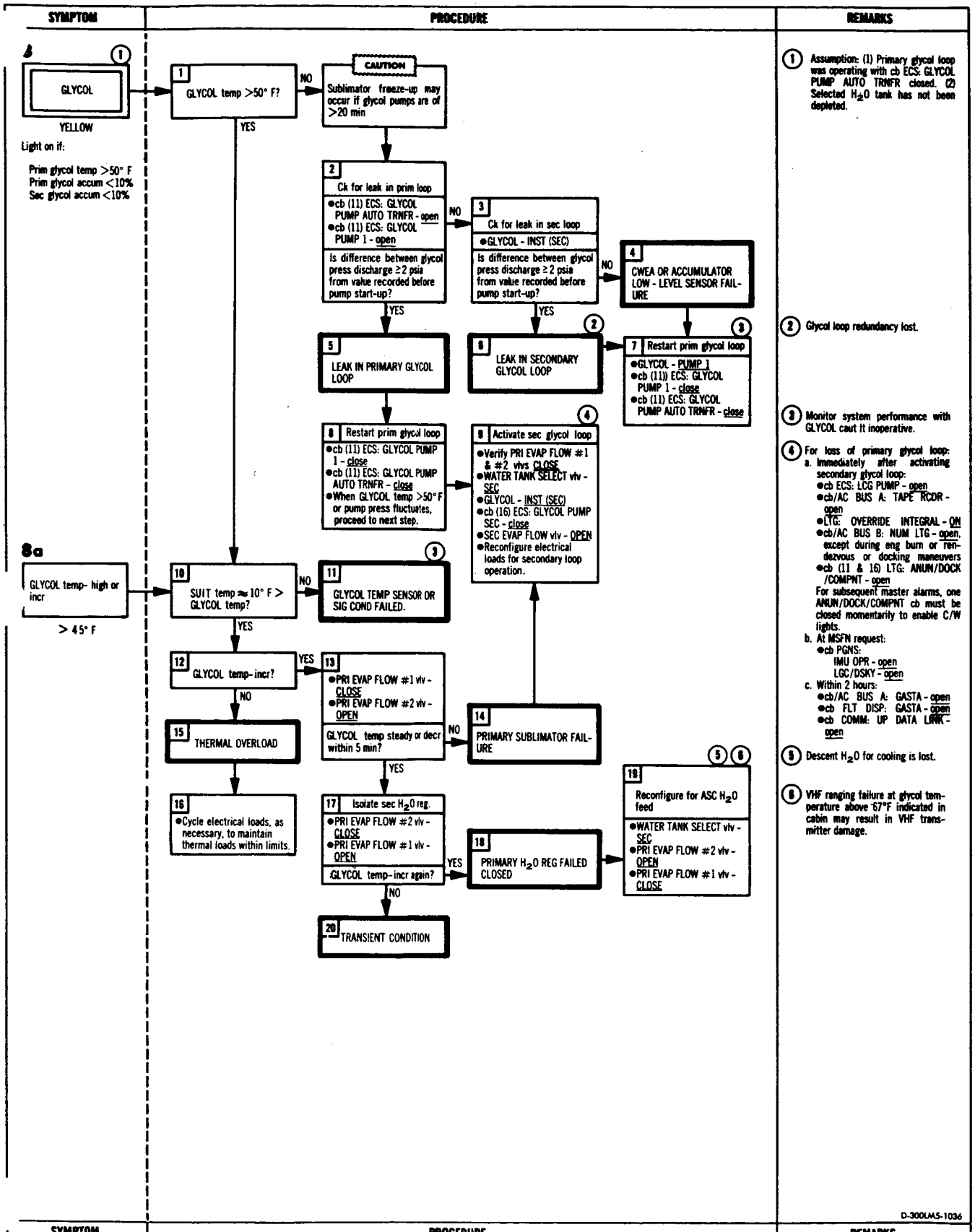
SYMPTOM
PROCEDURE
REMARKS
GLYCOL
YELLOW
Light on if:
Prim glycol temp >50° F
Prim glycol accum <10%
Sec glycol accum <10%
1 GLYCOL temp >50° F?
NO
YES
CAUTION
Sublimator freeze-up may occur if glycol pumps are of >20 min
2 Ck for leak in prim loop
●cb (11) ECS: GLYCOL PUMP AUTO TRNFR - open
●cb (11) ECS: GLYCOL PUMP 1 - open
Is difference between glycol press discharge ≥2 psia from value recorded before pump start-up?
3 Ck for leak in sec loop
●GLYCOL - INST (SEC)
Is difference between glycol press discharge ≥ 2 psia from value recorded before pump start-up?
4 CWEA OR ACCUMULATOR LOW - LEVEL SENSOR FAILURE
5 LEAK IN PRIMARY GLYCOL LOOP
6 LEAK IN SECONDARY GLYCOL LOOP
7 Restart prim glycol loop
●GLYCOL - PUMP 1
●cb (11)) ECS: GLYCOL PUMP 1 - close
●cb (11) ECS: GLYCOL PUMP AUTO TRNFR - close
8 Restart prim glycol loop
●cb (11) ECS: GLYCOL PUMP 1 - close
●cb (11) ECS: GLYCOL PUMP AUTO TRNFR - close
●When GLYCOL temp >50° F or pump press fluctuates, proceed to next step.
9 Activate sec glycol loop
●Verify PRI EVAP FLOW #1 & #2 vlvs CLOSE
●WATER TANK SELECT vlv - SEC
●GLYCOL - INST (SEC)
●cb (16) ECS: GLYCOL PUMP SEC - close
●SEC EVAP FLOW vlv - OPEN
●Reconfigure electrical loads for secondary loop operation.
8a
GLYCOL temp- high or incr
> 45° F
10 SUIT temp ≈ 10° F > GLYCOL temp?
NO
YES
11 GLYCOL TEMP SENSOR OR SIG COND FAILED.
12 GLYCOL temp- incr?
YES
NO
13
●PRI EVAP FLOW #1 vlv - CLOSE
●PRI EVAP FLOW #2 vlv - OPEN
GLYCOL temp steady or decr within 5 min?
14 PRIMARY SUBLIMATOR FAILURE
15 THERMAL OVERLOAD
16
●Cycle electrical loads, as necessary, to maintain thermal loads within limits.
17 Isolate sec H2O reg.
●PRI EVAP FLOW #2 vlv - CLOSE
●PRI EVAP FLOW #1 vlv - OPEN
GLYCOL temp- incr again?
18 PRIMARY H2O REG FAILED CLOSED
19 Reconfigure for ASC H2O feed
●WATER TANK SELECT vlv - SEC
●PRI EVAP FLOW #2 vlv - OPEN
●PRI EVAP FLOW #1 vlv - CLOSE
20 TRANSIENT CONDITION
1 Assumption: (1) Primary glycol loop was operating with cb ECS: GLYCOL PUMP AUTO TRNFR closed. (2) Selected H2O tank has not been depleted.
2 Glycol loop redundancy lost.
3 Monitor system performance with GLYCOL caut lt inoperative.
4 For loss of primary glycol loop:
a. Immediately after activating secondary glycol loop:
●cb ECS: LCG PUMP - open
●cb/AC BUS A: TAPE RCDR - open
●LTG: OVERRIDE INTEGRAL - ON
●cb/AC BUS B: NUM LTG - open, except during eng burn or rendezvous or docking maneuvers
●cb (11 & 16) LTG: ANUN/DOCK /COMPNT - open
For subsequent master alarms, one ANUN/DOCK/COMPNT cb must be closed momentarily to enable C/W lights.
b. At MSFN request:
●cb PGNS:
IMU OPR - open
LGC/DSKY - open
c. Within 2 hours:
●cb/AC BUS A: GASTA - open
●cb FLT DISP: GASTA - open
●cb COMM: UP DATA LINK - open
5 Descent H2O for cooling is lost.
6 VHF ranging failure at glycol temperature above 67°F indicated in cabin may result in VHF transmitter damage.
D-300LM5-1036

SYMPTOM	PROCEDURE	REMARKS
9 GLYCOL YELLOW Light on if pump ΔP <3 psid	1 ●GLYCOL - PUMP 2 GLYCOL comp lt - on? YES → 2 GLYCOL COMP LT RELAY FAILED CLOSED. → 3 Reselect pump No. 1. ●cb (11) ECS: GLYCOL PUMP AUTO TRNFR - open ●GLYCOL - PUMP 1 ●cb (11) ECS: GLYCOL PUMP AUTO TRNFR - close (1) NO → 4 GLYCOL PUMP NO. 1 FAILED. (2)	(1) Glycol pump automatic transfer is operable. Monitor GLYCOL ind. for pump failures. (2) A temporary ΔP switch failure will result in automatic transfer. Confirm pump No. 1 failure by resetting automatic transfer circuit and reselecting pump No. 1 while monitoring glycol pressure. Do not stop glycol flow for >20 minutes if sublimator is operating.
10 GLYCOL press-low or decr <17 psia	1 Compare glycol pumps. ●cb (11) ECS: GLYCOL PUMP AUTO TRNFR - open ●GLYCOL - PUMP 2 GLYCOL press - normal? YES → 2 GLYCOL PUMP NO. 1 DEGRADED OR BYPASS VLV FAILED OPEN. → 3 ●cb (11) ECS: GLYCOL PUMP 1 - open NO → 4 GLYCOL PRESS TRANSDUCER CALIBRATION SHIFTED. → 5 Reconfigure. ●GLYCOL - PUMP 1 ●cb (11) ECS: GLYCOL PUMP AUTO TRNFR - close	

A-300LM5-1C

SYMPTOM	PROCEDURE	REMARKS

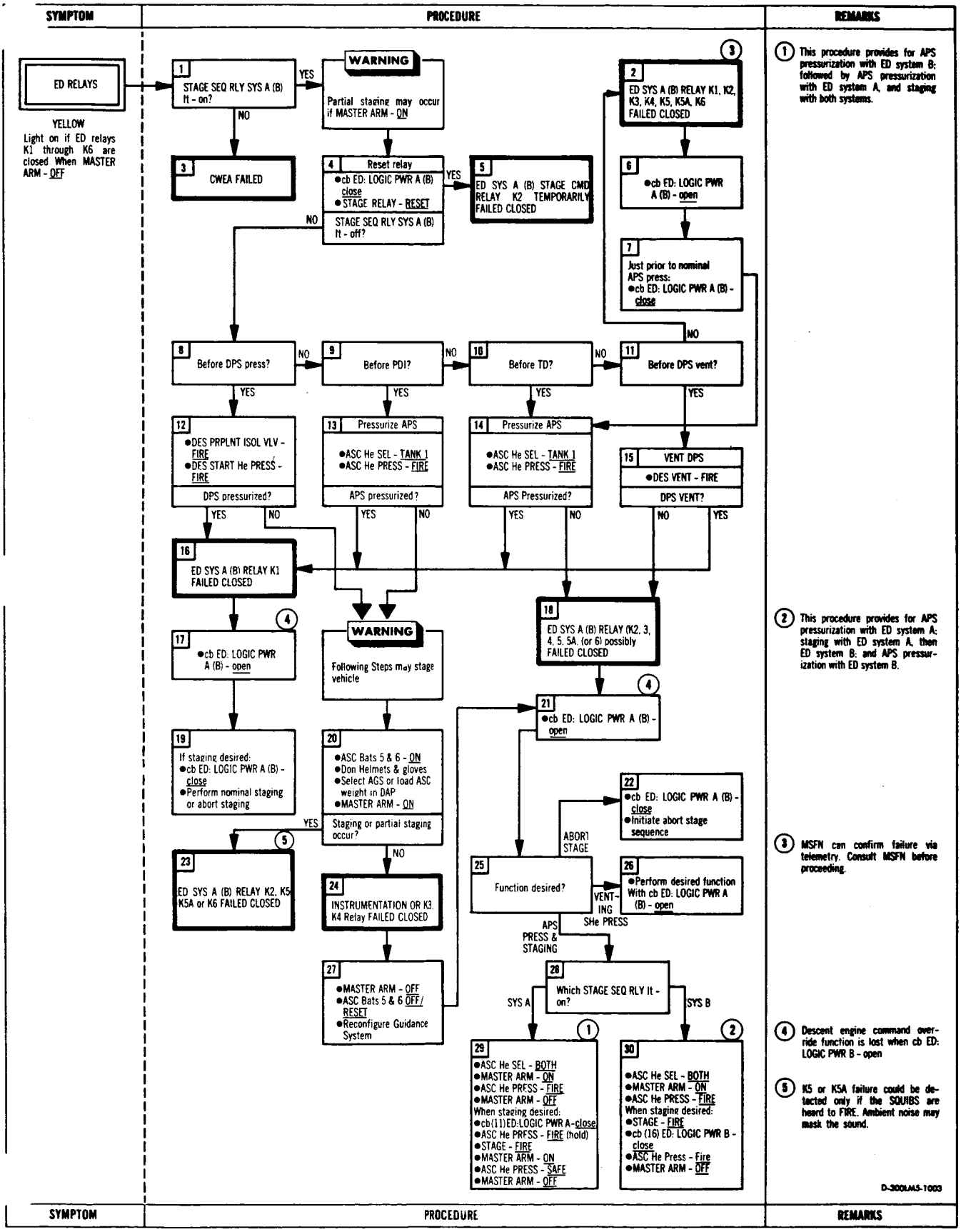
SYMPTOM
PROCEDURE
REMARKS
ED RELAYS
YELLOW
Light on if ED relays K1 through K6 are closed When MASTER ARM - OFF
1 STAGE SEQ RLY SYS A (B) lt - on?
YES
NO
WARNING
Partial staging may occur if MASTER ARM - ON
3 CWEA FAILED
4 Reset relay
•cb ED: LOGIC PWR A (B) close
•STAGE RELAY - RESET
STAGE SEQ RLY SYS A (B) lt - off?
5 ED SYS A (B) STAGE CMD RELAY K2 TEMPORARILY FAILED CLOSED
2 ED SYS A (B) RELAY K1, K2, K3, K4, K5, K5A, K6 FAILED CLOSED
6 •cb ED: LOGIC PWR A (B) - open
7 Just prior to nominal APS press: •cb ED: LOGIC PWR A (B) - close
8 Before DPS press?
9 Before PDI?
10 Before TD?
11 Before DPS vent?
12 •DES PRPLNT ISOL VLV - FIRE •DES START He PRESS - FIRE
DPS pressurized?
13 Pressurize APS
•ASC He SEL - TANK 1
•ASC He PRESS - FIRE
APS pressurized?
14 Pressurize APS
•ASC He SEL - TANK 1
•ASC He PRESS - FIRE
APS Pressurized?
15 VENT DPS
•DES VENT - FIRE
DPS VENT?
16 ED SYS A (B) RELAY K1 FAILED CLOSED
17 •cb ED: LOGIC PWR A (B) - open
WARNING
Following Steps may stage vehicle
18 ED SYS A (B) RELAY (K2, 3, 4, 5, 5A, (or 6) possibly FAILED CLOSED
19 If staging desired: •cb ED: LOGIC PWR A (B) - close •Perform nominal staging or abort staging
20 •ASC Bats 5 & 6 - ON •Don Helmets & gloves •Select AGS or load ASC weight in DAP •MASTER ARM - ON
Staging or partial staging occur?
23 ED SYS A (B) RELAY K2, K5 K5A or K6 FAILED CLOSED
24 INSTRUMENTATION OR K3, K4 Relay FAILED CLOSED
27 •MASTER ARM - OFF •ASC Bats 5 & 6 OFF/RESET •Reconfigure Guidance System
21 •cb ED: LOGIC PWR A (B) - open
22 •cb ED: LOGIC PWR A (B) - close •Initiate abort stage sequence
ABORT STAGE
25 Function desired?
26 •Perform desired function With cb ED: LOGIC PWR A (B) - open
VENTING
SHe PRESS
APS PRESS & STAGING
28 Which STAGE SEQ RLY lt - on?
SYS A
SYS B
29 •ASC He SEL - BOTH •MASTER ARM - ON •ASC He PRESS - FIRE •MASTER ARM - OFF When staging desired: •cb(11)ED:LOGIC PWR A-close •ASC He PRESS - FIRE (hold) •STAGE - FIRE •MASTER ARM - ON •ASC He PRESS - SAFE •MASTER ARM - OFF
30 •ASC He SEL - BOTH •MASTER ARM - ON •ASC He PRESS - FIRE When staging desired: •STAGE - FIRE •cb (16) ED: LOGIC PWR B - close •ASC He Press - Fire •MASTER ARM - OFF
1 This procedure provides for APS pressurization with ED system B; followed by APS pressurization with ED system A, and staging with both systems.
2 This procedure provides for APS pressurization with ED system A; staging with ED system A, then ED system B; and APS pressurization with ED system B.
3 MSFN can confirm failure via telemetry. Consult MSFN before proceeding.
4 Descent engine command override function is lost when cb ED: LOGIC PWR B - open
5 K5 or K5A failure could be detected only if the SQUIBS are heard to FIRE. Ambient noise may mask the sound.
D-300LMS-1003

5.2.11 EXPLOSIVE DEVICES

Table 5-11. ED Procedure Entry Sheet

Symptom	Sym No.	Page No.
ED RELAYS caut lt	1	5.2-58
STAGE SEQ RELAYS SYS A & B lts - off when MASTER ARM - ON	2	5.2-59
STAGE SEQ RELAYS SYS A & B lt - off when MASTER ARM - ON	3	5.2-59
MSFN advises both SYS A & B K7-K15 FAILED	4a	5.2-60
MSFN advises both SYS A & B K7-K15 FAILED	4b	5.2-60

SYMPTOM	PROCEDURE	REMARKS
4a		
MSFN advises SYS A (B) K7 - K15 FAILED	1 DPS SHe press? — NO → 2 CB ED: LOGIC PWR A (B) - open; YES → 3 After SHe press. ●FUEL VENT - CLOSE ●OXID VENT - CLOSE ●CB ED LOGIC PWR A (B) - close → 4 Before DPS venting: ●CB ED LOGIC PWR A (B) - open ●MASTER ARM - on	Relay functions K7 - RCS press. K8 - LDG gear. K9 - DPS SHE press. K10 - ASC HE TANK 1. K11 - ASC HE TANK 2. K12 - ASC FUEL and OXID COMP vlv (SYS B only). K12a - ACS FUEL and OXID COMP vlv. K13 - DPS FUEL and OXID vent. K14 - DPS AMB HE K15 - DPS FUEL and OXID COMP vlv.
4b		
MSFN advises both SYS A & B K7 - K15 FAILED	5 Before MASTER ARM - on: ●DES He REG 1 - CLOSE ●DES He REG 2 - CLOSE ●FUEL VENT - CLOSE ●OXID VENT - CLOSE If DPS not pressurized: ●DES PRPLNT ISOL VLV - FIRE & hold until MASTER ARM - on. → 6 At TIG of First DPS burn: DES He REG 1 - OPEN.	

A-300LM10-9026

SYMPTOM	PROCEDURE	REMARKS
2	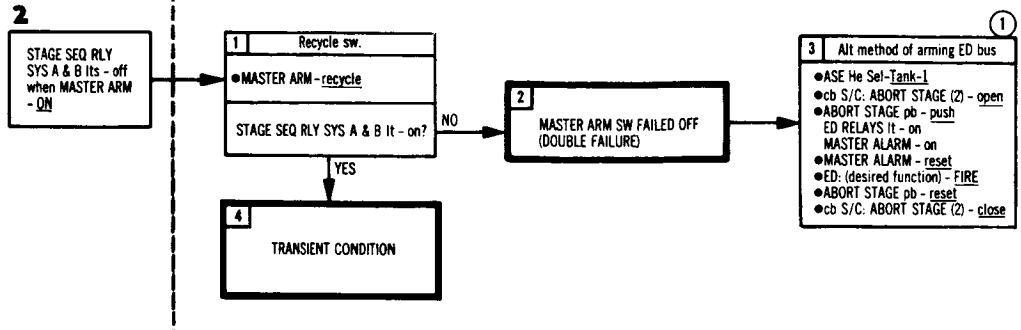	(1) This method pressurizes ASCENT Tank-1 as soon as ABORT STAGE pb is pushed.
3	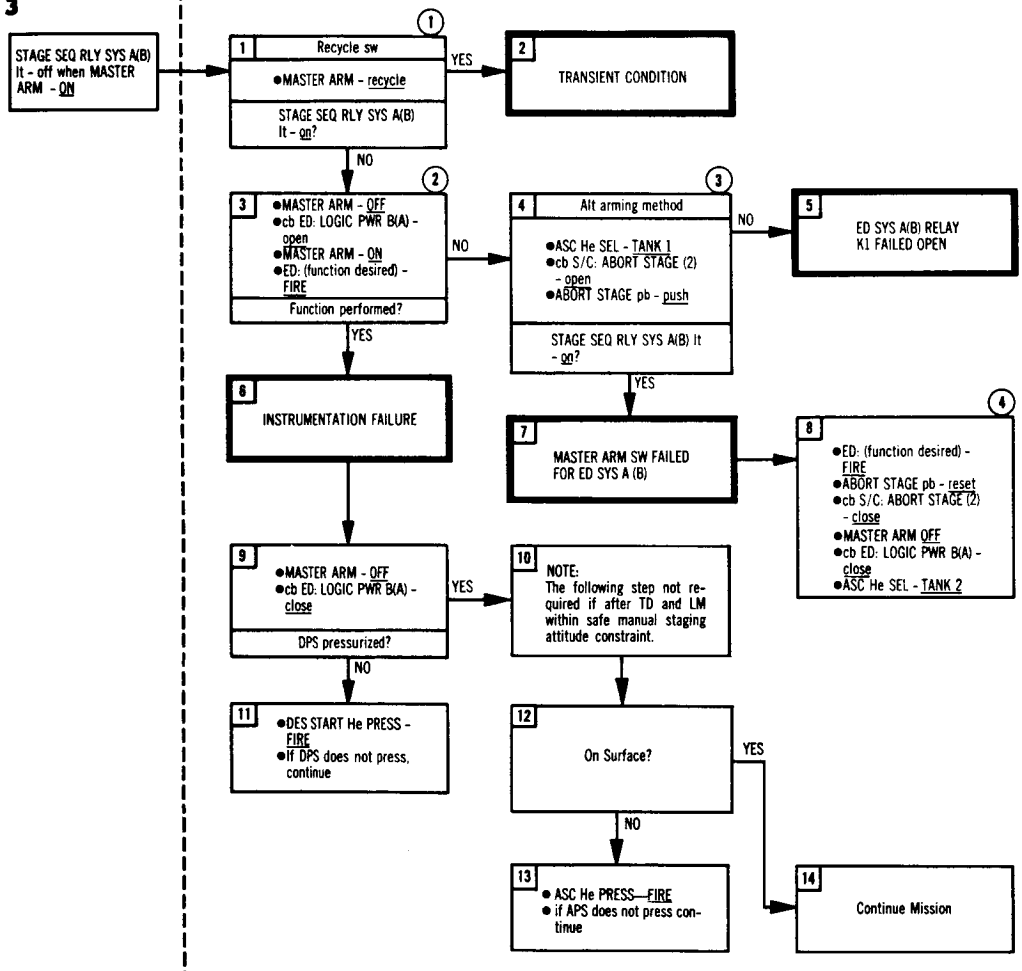	(1) MSFN can confirm failure. Consult MSFN before proceeding. (2) Descent engine command override function is lost when cb ED: LOGIC PWR B - open (3) This method pressurizes ascent tank 1 as soon as abort stage pb is pushed. (4) ABORT STAGE pb must be pushed for staging. This ensures staging with two pyro systems.

B-300LM8

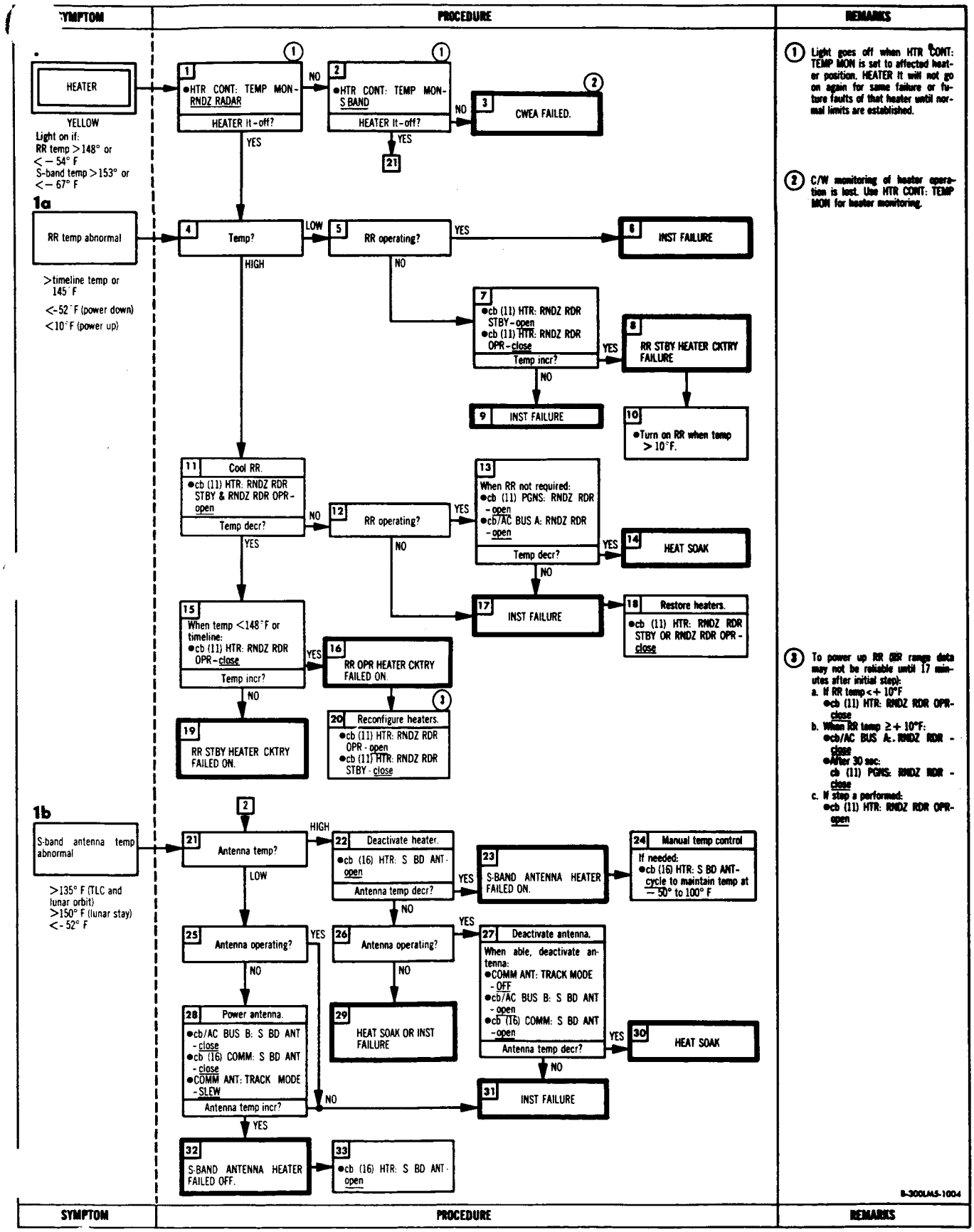
SYMPTOM
PROCEDURE
REMARKS
HEATER
YELLOW
Light on if:
RR temp >148° or
<−54° F
S-band temp >153° or
<−67° F
1a
RR temp abnormal
>timeline temp or 145° F
<-52° F (power down)
<10° F (power up)
1b
S-band antenna temp abnormal
>135° F (TLC and lunar orbit)
>150° F (lunar stay)
<-52° F
1 •HTR CONT: TEMP MON-RNDZ RADAR
HEATER lt-off?
2 •HTR CONT: TEMP MON-S BAND
HEATER lt-off?
3 CWEA FAILED.
4 Temp?
5 RR operating?
6 INST FAILURE
7 •cb (11) HTR: RNDZ RDR STBY-open
•cb (11) HTR: RNDZ RDR OPR-close
Temp incr?
8 RR STBY HEATER CKTRY FAILURE
9 INST FAILURE
10 •Turn on RR when temp >10°F.
11 Cool RR.
•cb (11) HTR: RNDZ RDR STBY & RNDZ RDR OPR-open
Temp decr?
12 RR operating?
13 When RR not required:
•cb (11) PGNS: RNDZ RDR -open
•cb/AC BUS A: RNDZ RDR -open
Temp decr?
14 HEAT SOAK
17 INST FAILURE
18 Restore heaters.
•cb (11) HTR: RNDZ RDR STBY OR RNDZ RDR OPR-close
15 When temp <148°F or timeline:
•cb (11) HTR: RNDZ RDR OPR-close
Temp incr?
16 RR OPR HEATER CKTRY FAILED ON.
19 RR STBY HEATER CKTRY FAILED ON.
20 Reconfigure heaters.
•cb (11) HTR: RNDZ RDR OPR-open
•cb (11) HTR: RNDZ RDR STBY-close
21 Antenna temp?
22 Deactivate heater.
•cb (16) HTR: S BD ANT-open
Antenna temp decr?
23 S-BAND ANTENNA HEATER FAILED ON.
24 Manual temp control
If needed:
•cb (16) HTR: S BD ANT-cycle to maintain temp at −50° to 100° F
25 Antenna operating?
26 Antenna operating?
27 Deactivate antenna.
When able, deactivate antenna:
•COMM ANT: TRACK MODE -OFF
•cb/AC BUS B: S BD ANT -open
•cb (16) COMM: S BD ANT -open
Antenna temp decr?
28 Power antenna.
•cb/AC BUS B: S BD ANT -close
•cb (16) COMM: S BD ANT -close
•COMM ANT: TRACK MODE -SLEW
Antenna temp incr?
29 HEAT SOAK OR INST FAILURE
30 HEAT SOAK
31 INST FAILURE
32 S-BAND ANTENNA HEATER FAILED OFF.
33 •cb (16) HTR: S BD ANT-open
YES
NO
LOW
HIGH
1 Light goes off when HTR CONT: TEMP MON is set to affected heater position. HEATER lt will not go on again for same failure or future faults of that heater until normal limits are established.
2 C/W monitoring of heater operation is lost. Use HTR CONT: TEMP MON for heater monitoring.
3 To power up RR OBR range data may not be reliable until 17 minutes after initial step):
a. If RR temp<+10°F
•cb (11) HTR: RNDZ RDR OPR-close
b. When RR temp ≥+10°F:
•cb/AC BUS A: RNDZ RDR -close
•After 30 sec:
cb (11) PGNS: RNDZ RDR -close
c. If step a performed:
•cb (11) HTR: RNDZ RDR OPR-open
B-300LM5-1004

5.2.12 HEATERS

5.2.12.1 Assumptions

5.2.12.1.1 HEATER caut lt (RCS)

- Assume no action will be taken during a critical mission phase.
- One heat system (4/QUAD) can maintain temperature above 119°F.

Table 5-12. HTR Procedure Entry Sheet

Symptom	Sym No.	Page No.
HEATER caut lt	1	5.2-62
RR temp abnormal	1a	5.2-62
S-band antenna temp abnormal	1b	5.2-62
LR temp abnormal	2	5.2-63
RCS quad 1 (2, 3, 4) temp abnormal	3	5.2-63

SYMPTOM	PROCEDURE	REMARKS

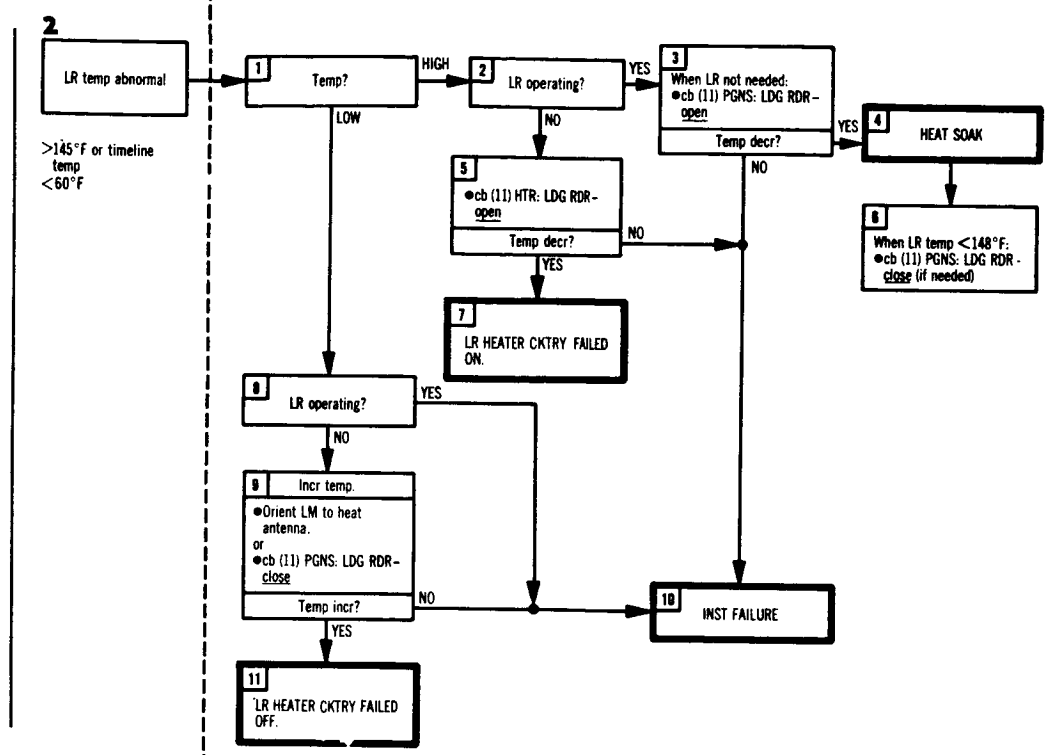

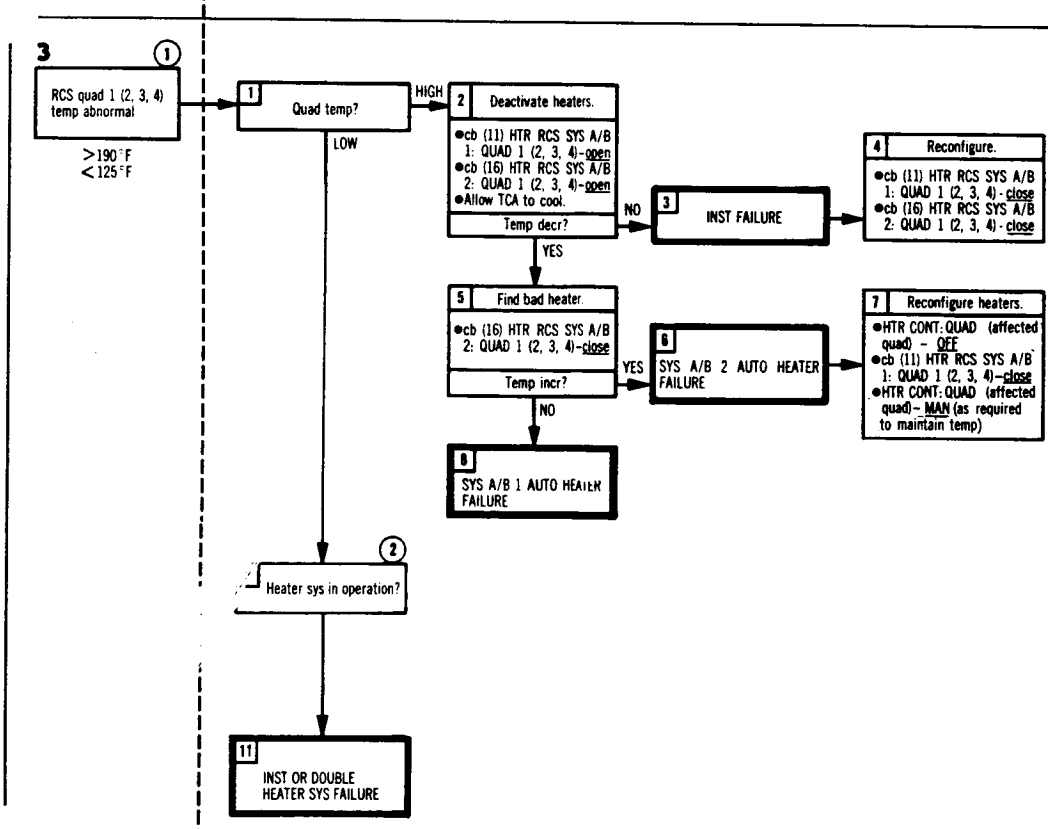

(1) Abnormal high temp is for periods of no thruster activity after temp soakback from previous activity (if any) has stabilized.

(2) For contingencies where QUAD temp ≧ 60°F, manual mode engine operation may be undertaken. If minimum pulse bit is required, QUAD warmup to 119°F may be accomplished by steady state engine operation. A 3-second firing of each engine in cold QUAD will result in cluster temperature rise through thermal soak-back. After minimum temperature achieved, maintain operational temperature through heater and/or engine operation.

C-300LM5-1005

SYMPTOM	PROCEDURE	REMARKS

PARA	TITLE	PAGE
5.3	Emergency Procedures	5.3-2
5.3.1	Excessive Cabin Leak	5.3-2
5.3.2	Fire/Smoke in Cabin (Not in suit loop)	5.3-3
5.3.3	Fire/Smoke in suit loop	5.3-3
5.3.4	Suit Leak in Depressurized Cabin	5.3-4
5.3.5	Vacuum Changeover - PLSS to LM	5.3-5
5.3.6	Crewman Vacuum Transfer to CSM	5.3-6
5.3.7	Emergency Transfer, Using OPS	5.3-7
5.3.8	Emergency Forward Hatch Opening (Cabin Side)	5.3-8
5.3.9	Contaminants In ARS/Cabin Atmosphere	5.3-8
5.3.10	Smoke In Cabin (Crew Unsuited)	5.3-9
5.3.11	Loss of Descent Power	5.3-11
5.3.12	Loss of CDR Bus During Powered Descent	5.3-11
5.3.12.1	To Abort (DPS Engine)	5.3-11
5.3.12.2	To Abort (APS Engine)	5.3-12
5.3.12.3	Reconfigure	5.3-13
5.3.13	Loss of LMP Bus During Powered Descent	5.3-13
5.3.13.1	To Abort (DPS Engine)	5.3-13
5.3.13.2	To Abort (APS Engine)	5.3-14
5.3.13.3	Reconfigure	5.3-14
5.3.14	Extravehicular Transfer (Staged Vehicle)	5.3-15
5.3.14.1	Subsystem Preparation for Egress	5.3-15
5.3.14.2	Final Subsystem Preparation for EVT	5.3-16

CREW-MAN	PNL	LM 3231 PROCEDURES	REMARKS
		5.3 EMERGENCY PROCEDURES	
		Emergency procedures enable the crew to perform corrective action in the event of hazardous situations. These procedures require instant response on the part of the crew to prevent the situation from becoming worse. It is assumed that the crew are wearing helmets and gloves at all times. The procedures cover the following: a. Excessive cabin leak b. Fire/smoke in cabin (not in suit loop) c. Fire/smoke in suit loop d. Suit leak in depressurized cabin e. Vacuum changeover - PLSS to LM f. Crewman vacuum transfer to CSM g. Emergency transfer, using OPS h. Emergency forward hatch opening (cabin side) i. Contaminants in ARS/cabin atmosphere j. Loss of descent power k. Loss of CDR bus during powered descent l. Loss of LMP bus during powered descent m. Extravehicular transfer	
		5.3.1 EXCESSIVE CABIN LEAK	Assumption: ECS is in basic (unstaged) configuration when cabin leak occurs.
CDR/ LMP	1,2 1 ECS	1. When cabin pressure drops to <4.45 to 3.7 psia, following occurs automatically: MASTER ALARM - on CABIN warn lt - on CABIN REPRESS vlv opens SUIT GAS DIVERTER vlv - PULL EGRESS	CABIN REPRESS vlv will not open if vehicle is in ECS basic (staged) configuration.
	ECS 1 ECS	2. PRESS REG A & B vlv - EGRESS CABIN warn lt - off CABIN REPRESS vlv closes Cabin fan goes off.	
		3. CABIN REPRESS vlv - CLOSE	
LMP	16	4. CB ECS: CABIN REPRESS - open LCG PUMP - as required	
CDR/ LMP	1/2	5. MASTER ALARM pb/lt - reset	
CDR	11	6. CB ECS: CABIN FAN - open	

CREW-MAN	PNL	PROCEDURES	REMARKS
		5.3.2 FIRE/SMOKE IN CABIN (NOT IN SUIT LOOP)	
	ECS	1. PRESS REG A & B vlvs - EGRESS	When PRESS REG A and/or B vlv - CLOSE, ensure handle is rotated to full hard stop position.
		2. SUIT GAS DIVERTER vlv - PULL EGRESS	
		3. Use EPS: POWER/TEMP MON sel to check for excessive current. Remove power from affected bus.	
		4. Use fire extinguisher as required.	
		5. Don helmets & gloves.	Alternative of donning helmets and gloves and using fire extinguisher is real-time decision. Order of items to be accomplished is dependent on crew assessment of situation.
	2	6. SUIT FAN sel - redundant fan if flow stops	
		WARNING Combustion products should be considered toxic. Smoke and contaminants must be removed from cabin before removing helmets, by purging or dumping cabin.	
		7. If fire persists: Prepare to dump cabin (if ascent stage only, insufficient O2 is available for repress) Visually check suit integrity.	
	ECS	CABIN GAS RETURN vlv - EGRESS	
	16	CB ECS: CABIN REPRESS - open	
		Cabin relief & dump vlv (fwd) - OPEN, then AUTO at 3.2 psia	
	2	ECS: SUIT PRESS ind - 3.6 to 4.0 psi	
	ECS	Cabin relief & dump vlv - OPEN until ECS: CABIN PRESS ind - 0 psia	
		5.3.3 FIRE/SMOKE IN SUIT LOOP	
	ECS	1. SUIT ISOL vlv (CDR & LMP) - SUIT DISC	
	2	2. SUIT FAN sel - OFF	

CREW-MAN	PNL	PROCEDURES	REMARKS
		5.3.3 FIRE/SMOKE IN SUIT LOOP (cont)	
	ECS	3. PRESS REG A & B vlv - CLOSE	When PRESS REG A and/or B vlv - CLOSE, ensure handle is rotated to full hard stop position.
		4. Remove helmet & gloves.	
		5. SUIT CIRCUIT RELIEF vlv - CLOSE	
		6. CABIN GAS RETURN vlv - EGRESS	
		7. SUIT GAS DIVERTER vlv - PULL EGRESS	
	11 16	8. Isolate suit loop electrically: CB ECS: SUIT FAN 1 - open CB ECS: SUIT FLOW CONT - open SUIT FAN 2 - open SUIT FAN ΔP - open DIVERT VLV - open CO_2 SENSOR - open	
	ECS	9. CABIN REPRESS vlv - MANUAL, as necessary to maintain cabin pressure & replenish O_2	
		When fire goes out: 10. If cabin is contaminated, purge as necessary.	
		11. CABIN REPRESS vlv - MANUAL	
		12. Cabin relief & dump vlv (fwd) - AUTO	
		13. If ascent stage only, closely monitor O_2 supply.	
		5.3.4 SUIT LEAK IN DEPRESSURIZED CABIN	
CDR/ LMP	1,2 ECS	1. MASTER ALARM - on SUIT/FAN warn lt - on SUIT ISOL vlv (CDR) - SUIT DISC SUIT ISOL vlv (LMP) - SUIT DISC	These events occur simultaneously and automatically when ECS: SUIT PRESS ind falls below 3.1 psia.

CREW-MAN	PNL	PROCEDURES	REMARKS
		5.3.4 SUIT LEAK IN DEPRESSURIZED CABIN (cont)	
		2. Forward hatch - close	Crewman with intact suit will perform steps 2 through 10. Omit steps 2 through 4 if forward hatch is closed and forward cabin relief and dump valve is not set to OPEN.
		3. Forward hatch handle - LOCK	
		4. Cabin relief & dump vlv (fwd) - AUTO	
		5. CABIN REPRESS vlv - AUTO CB ECS: CABIN REPRESS - close CABIN warn lt - on	
		6. PRESS REG A vlv - CABIN	SUIT/FAN warn lt - off when suit pressure >3.1 psia. CABIN warn lt - off when cabin pressure is between 4.4 and 5 psia.
		7. PRESS REG B vlv - CABIN	
		7A. CABIN GAS RETURN vlv - AUTO SUIT GAS DIVERTER vlv - PUSH CABIN	
		8. SUIT ISOL vlv (CDR) - SUIT FLOW	Steps 8 and 9 are performed when cabin pressure >3.1 psia.
		9. SUIT ISOL vlv (LMP) - SUIT FLOW	
	1,2	10. MASTER ALARM pb/lt - reset	
		5.3.5 VACUUM CHANGEOVER - PLSS TO LM	Assumption: Cabin cannot be pressurized.
LMP		1. Remove purge valve from PGA & hand to CDR for stowage.	
		2. Disconnect OPS O2 hose from PGA.	
CDR		3. Remove LM O2 umbilical from stowage & hand to LMP.	
LMP		4. Connect LM O2 umbilical to PGA right-side connectors & verify locked (red to red, blue to blue).	
	PLSS	5. FEEDWATER vlv - CLOSED	If PLSS sublimator freeze-up is a problem, do not proceed until LCG liquid circulation temperature starts to rise.

CREW-MAN	PNL	PROCEDURES	REMARKS
		5.3.5 VACUUM CHANGEOVER - PLSS TO LM (cont)	
	ECS	6. SUIT ISOL vlv (LMP) - SUIT FLOW	
	PGA	7. VENTILATION DIVERTER vlv - IV (horizontal)	
	PLSS	8. FAN sw - OFF PUMP sw - OFF EVC-1 (or EVC-2) MODE SEL sw - O	
		9. Verify flow from LM ARS to PGA.	
		10. Disconnect PLSS electrical connector from PGA & connect LM comm cable to PGA.	
		11. Disconnect PLSS O2 hoses from PGA.	
		5.3.6 CREWMAN VACUUM TRANSFER TO CSM	Assumptions: (1) Overhead hatch is open and (2) tunnel is clear.
		1. Receive transfer umbilical from CSM.	
		2. Verify that O2 is not flowing in transfer umbilical.	
		3. Remove plugs from appropriate PGA O2 connectors & stow.	
		4. Connect transfer umbilical O2 hoses to PGA, inlet to inlet (blue to blue), outlet to outlet (red to red).	
		5. Request CSM to verify no transfer of umbilical suit power.	
	12	6. COMM: TLM BIOMED sw - LEFT or OFF (LMP) or COMM: TLM BIOMED sw - RIGHT or OFF (CDR)	Steps 6 and 7 ensure that crewman communications cables are not powered.
	11	7. CB COMM: CDR AUDIO - open	CDR loses communications.
		or	
	16	CB COMM: SE AUDIO - open	LMP loses communications.
		8. Disconnect LM comm cable from PGA & connect transfer umbilical comm cable to PGA.	

CREW-MAN	PNL	PROCEDURES	REMARKS
		5.3.6 CREWMAN VACUUM TRANSFER TO CSM (cont)	
		9. Request CSM to apply transfer umbilical suit power.	
		10. Request CSM to start O2 flow through transfer umbilical.	This constitutes communications check via transfer umbilical communications cable.
	ECS	11. SUIT ISOL vlv (CDR) - SUIT DISC or SUIT ISOL vlv (LMP) - SUIT DISC	
		12. Verify O2 flow to PGA through transfer umbilical.	
	16	13. CB ECS: LCG PUMP - open	
		14. Disconnect LM LCG H2O hoses & LM O2 hoses from PGA.	
		15. Remove all plugs from stowage & place in PGA connectors.	
		16. Stow LM umbilical.	
		17. Transfer into CSM.	
		5.3.7 EMERGENCY TRANSFER, USING OPS	Assumptions: (1) LM or CSM cannot be pressurized and (2) CDR and LMP have OPS donned and activated.
CDR		1. Cabin relief & dump vlv (ovhd) - OPEN	
LMP		2. Cabin relief & dump vlv (fwd) - OPEN	With two OPS's operating and each flowing O2 at rate of 8 lb/hr, cabin equilibrium pressure will be approximately 0.075 psia when exhausting through both cabin relief and dump valves. If LM and CSM are docked, both CSM hatches should be open to allow LM overhead cabin relief and dump valve to exhaust to vacuum. If exhausting is through one cabin relief & dump valve, cabin equilibrium pressure will be approximately 0.15 psia, which may cause difficulty in opening hatch(es).

CREW-MAN	PNL	PROCEDURES	REMARKS
		5.3.8 EMERGENCY FORWARD HATCH OPENING (CABIN SIDE)	
		1. If latch is jammed in LOCK position: a. Pull lanyard to remove lockpin. b. Rotate cam plate to uncover latch. c. Grasp handle & pull hatch open.	Lanyard is to left of hatch latch, on hatch jamb.
		5.3.9 CONTAMINANTS IN ARS/CABIN ATMOSPHERE	
		Perform ARS purge:	
LMP	ECS	1. SUIT GAS DIVERTER vlv - PULL EGRESS	
		2. SUIT CIRCUIT RELIEF vlv - AUTO	
		3. CABIN GAS RETURN vlv - EGRESS	
		4. CO_2 CANISTER SEL vlv - midposition	Selection of midposition allows contamination absorption by both primary and secondary LiOH canisters.
		CAUTION Step 5 shall be performed consistent with amount of available O_2.	
		5. PRESS REG A vlv - DIRECT O_2 for 5 minutes or until ARS is clear	ECS: SUIT PRESS ind will increase to approximately 5.8 psia.
		6. CO_2 CANISTER SEL vlv - PRIM	
		NOTE If cabin dump is required, omit steps 7 thru 11 and line 3 of step 15.	
		7. Cabin relief & dump vlv (fwd) - OPEN	
CDR		8. When ECS: CABIN PRESS ind - 4.5 psia: Cabin relief & dump vlv (fwd) - AUTO	
LMP		9. PRESS REG A vlv - CABIN	

CREW-MAN	PNL	PROCEDURES	REMARKS
		5.3.9 CONTAMINANTS IN ARS/CABIN ATMOSPHERE (cont)	
		CAUTION Step 10 will degrade ARS pressure relief capability.	
		10. When ECS: SUIT PRESS ind decreases to approximately 5 psia: SUIT CIRCUIT RELIEF vlv - CLOSE	
LMP	ECS	11. Maintain cabin pressure at 4.5 psia by cycling SUIT CIRCUIT RELIEF vlv - CLOSE, AUTO, CLOSE, as required.	Required to prevent automatic actuation of CABIN REPRESS vlv at 3.7 to 4.45 psia. Limit cabin pressure to 4.6 psia to prevent violating purge.
		CAUTION Steps 12 & subsequent are required only if toxic fumes are severe enough to require cabin dump.	ARS/PGA Pressure Integrity Check (para 4.2.16) prior to step 12 is real-time decision.
		12. PRESS REG A & B vlv - EGRESS	
	16	13. CB ECS: CABIN REPRESS - open	
CDR		14. Cabin relief & dump vlv (fwd) - OPEN	
LMP		15. Monitor ECS: SUIT & CABIN PRESS ind. When cabin pressure decays to 4.0 psia: SUIT CIRCUIT RELIEF vlv - AUTO SUIT PRESS ind decay stops at 4.3 psia.	
		16. Cabin relief & dump vlv (fwd) - AUTO when cabin pressure = zero psia.	
		5.3.10 SMOKE IN CABIN (Crew Unsuited)	Assume ARS in "CABIN" mode with SUIT ISOL vlvs in SUIT FLOW, O_2 Hoses Stowed, SUIT FAN 2 in use.
		NOTE Step 1 to be performed based on density and toxicity of smoke in cabin.	Assume crew have determined smoke source is not in the suit loop and performance of this procedure will not percipitate an uncontrolled fire.

CREW-MAN	PNL	LM 2004 PROCEDURES	REMARKS
		5.3.10 SMOKE IN CABIN (Crew Unsuited) (cont)	
LMP	ECS	1. Cabin Repress vlv - MANUAL for 1 minute then - CLOSE NOTE Cabin purge time of 1 minute may be extended depending on amount of available Descent O_2.	Cabin pressure will increase to 5.4 to 5.85 psia before cabin pressure relief valve opens. Relief valve operation should be audible to crew.
	16	2. CB ECS: SUIT FAN Δ P - open	
LMP	16	3. CB ECS: SUIT FAN 2 - open	ECS Caution & H_2O Separator component lts ON when H_2O fan speed decays to <800 rpm.
LMP	ECS	4. SUIT CIRCUIT RELIEF vlv - AUTO (verify)	
LMP	ECS	5. Unstow Blue O_2 Hoses	
LMP	ECS	6. PRESS REGS A & B vlv - DIRECT O_2	Provides O_2 flow to crew when suit fan off. Minimum allowable cabin pressure is 3.0 psia with Suit Isolation valves in Suit Disconnect, Press Regs A&B in Direct O_2 and Suit Circuit Relief vlv in Auto.
CDR/ LMP		7. DON PGA's (without LCG & UCTA, if doffed) UCTA HOSE, LCG & BIO BELT CONNECTIONS NOT REQD. NOTE Use Blue O_2 Hoses periodically to "wash" smoke from face, as required.	
		8. Connect ECS umbilicals to PGA, O_2 hoses Blue/Blue, Red/Red	
		9. Don helmets & gloves	
LMP	ECS	10. PRESS REG B vlv - EGRESS	
		11. SUIT GAS DIVERTER vlv - PULL EGRESS	

RC 1606

CREW-MAN	PNL	PROCEDURES	REMARKS
		5.3.10 SMOKE IN CABIN (Crew Unsuited) (cont)	
		12. CABIN GAS RETURN vlv - EGRESS	
		CAUTION Step 13 terminates O_2 flow to crew in order to purge the suit loop. Suit isol valve should not remain in Suit Disconnect >1 minute or crew asphyxiation may result. Perform steps 13 thru 16 within 1 minute.	
		13. SUIT ISOL vlv's (CDR & LMP) - SUIT DISCONNECT	
LMP	16	14. CB ECS: SUIT FAN 2 - close	Initiates ARS circulation for purging smoke. H_2O Sep Component lt out when H_2O Sep speed increases to >800 rpm.
LMP	16	15. CB ECS; SUIT FAN P - close	
LMP	ECS	16. SUIT ISOL vlv's (CDR & LMP) - SUIT FLOW	Reinitiates O_2 flow to crew.
LMP	16	17. CB ECS: CABIN REPRESS - open	
CDR	ECS	18. Cabin relief & dump vlv (fwd or ovhd) - OPEN reduce cabin press to 3.5 psia then AUTO	
LMP	ECS	19. PRESS REG A vlv - EGRESS	Press REG A in DIRECT O_2 until this step maintains suit loop pressure above cabin pressure.
LMP	2	20. Verify SUIT PRESS 4.3 psia, monitor for 1 minute, verify stable.	Assures Suit Circuit Relief vlv lockup and PGA/ARS integrity prior to cabin dump to 0 psia.
CDR	ECS	21. Cabin relief & dump vlv (fwd or ovhd) - OPEN (reduce cabin pressure to 0 psia) then AUTO	

CREW-MAN	PNL	PROCEDURES	REMARKS
		5.3.11 LOSS OF DESCENT POWER	Assumption: EPS is in basic (unstaged) configuration.
LMP	14	1. EPS: BAT 5 NORMAL SE FEED sw - ON BAT 6 NORMAL CDR FEED sw - ON	Lighting and life support systems restored.
	ECS	2. DES 02 vlv - CLOSE #1 ASC 02 vlv - OPEN WATER TANK SELECT vlv - ASC DES H20 vlv - CLOSE	
		3. Reconfigure electrical loads as required.	
		4. Perform EPS Basic (Staged).	Ref para 4.13.4.2.
		5.3.12 LOSS OF CDR BUS DURING POWERED DESCENT	Symptom: MASTER ALARM - on, DC BUS and LGC warn lt - on, and EPS: DC FEEDER FAULT comp caut lt - on. Assumption: Inverter No. 1 is used during DPS burns. Results: 100% DPS thrust, loss of PGNS, GDA locked, loss of RCS, and loss of DPS automatic start, stop, and manual start. Engine will shut down unless DES ENG CMD OVRD sw - ON.
		5.3.12.1 To Abort (DPS Engine)	
	3	1. Verify/set DES ENG CMD OVRD sw - ON	
	1	2. GUID CONT sw - AGS	
	3	3. S/C: AGS sw - AUTO	S/C: AGS sw - ATT HOLD could be used to provide manual maneuver to desired attitude, then AGS sw - AUTO.
	1	4. ABORT pb - push	
	2	5. SUIT FAN sel - 2	
	14	6. EPS: INVERTER sw - 2	Integral and numerics lighting are restored when inverter No. 2 is selected.
	6	7. Key DEDA C 500R (0.1 fps). Monitor Δ Vgx.	
		7A. ENG THR CONT: ENG ARM sw - OFF	

CREW-MAN	PNL	PROCEDURES	REMARKS
		5.3.12.1 To Abort (DPS Engine) (cont)	
	5/6	8. To terminate burn when ΔVgx goes to zero: DES ENG CMD OVRD sw - OFF	
	3	9. Delete	
		10. Reconfigure.	Ref para 5.3.12.3.
		5.3.12.2 To Abort (APS Engine)	
	1	1. GUID CONT sw - AGS	
	3	2. S/C: AGS sw - AUTO	Manual start capability is lost. S/C: AGS sw must be in AUTO position and eng STOP pb/lt must be in reset position. There will be large attitude excursion when S/C: AGS sw - AUTO. Expect attitude transient at staging.
	1	3. ABORT STAGE pb - push	
		4. ENG THR CONT: ENG ARM sw - ASC	
		CAUTION Do not set ENG THR CONT: BAL CPL sw - OFF.	
	TTCA	5. THROTTLE/JETS cont (CDR) - JETS	
		6. If ullage threshold counter is not set to zero: TTCA - move up until eng starts	
	2	7. SUIT FAN sel - 2	
	14	8. EPS: INVERTER sw - 2	
	6	9. Key DEDA C 500R (0.1 fps). Monitor ΔVgx.	
	5/6	10. Monitor thrust cutoff. If not cutoff: Eng STOP pb/lt - push	
		11. Reconfigure.	Ref para 5.3.12.3.

CREW-MAN	PNL	PROCEDURES	REMARKS
		5.3.12.3 Reconfigure	
	1	1. ABORT/ABORT STAGE pb - reset	
		2. ENG THR CONT: ENG ARM sw - OFF	
	8	3. AUDIO: AUDIO CONT sw - BU	
		4. AUDIO: S BAND T/R sw - S BAND T/R ICS T/R sw - ICS T/R MODE sw - ICS/PTT VHF A sw - T/R VHF B sw - RCV	
	ECS	5. PRI EVAP FLOW #1 vlv - CLOSE Activate secondary glycol loop.	Ref para 4.13.1.4.
		6. Use VHF ranging & track light for rendezvous.	Ref para 4.13.2.10.
	5/6	7. Eng STOP pb/lt - reset	
		5.3.13 LOSS OF LMP BUS DURING POWERED DESCENT	Symptom: DC BUS and AGS warn lt, and EPS: DC FEEDER FAULT comp caut lt - on. Assumption: Inverter No. 1 is used for DPS burn. Results: 100% DPS thrust, loss of AGS, loss of DPS/APS automatic start and stop capability. GDA locked, DES ENG CMD OVRD lost.
		5.3.13.1 To Abort (DPS Engine)	
	3	1. S/C: PGNS sw - AUTO	
	1	2. ABORT pb - push	Must be accomplished immediately, to prevent undesirable attitude transient when DPS thrust goes to 100%.
		3. If manual backup is desired or if inverter No. 2 is in use:	DPS will shut down and must be manually started if inverter No. 2 is in use.
	8	ED: MASTER ARM sw - ON	
	5	Eng START pb/lt - push	

CREW-MAN	PNL	PROCEDURES	REMARKS
		5.3.13.1 To Abort (DPS Engine) (cont)	
	5/6	4. To terminate burn when TG <1 sec: Eng STOP pb/lt - push	
		5. Reconfigure.	Ref para 5.3.13.3.
		5.3.13.2 To Abort (APS Engine)	
	3	1. S/C: PGNS sw - AUTO	
	1	2. ABORT STAGE pb - push	
		3. ENG THR CONT: ENG ARM sw - ASC	
	5	4. Eng START pb/lt - push	
	14	5. EPS: INVERTER sw - 1	Normal configuration.
	5/6	6. To terminate burn when TG <1 sec: Eng STOP pb/lt - push	
		7. Reconfigure.	Ref para 5.3.13.3.
		5.3.13.3 Reconfigure	
	1	1. ENG THR CONT: ENG ARM sw - OFF	
		2. ABORT/ABORT STAGE pb - reset	
	12	3. UP DATA LINK sw - VOICE BU AUDIO: AUDIO CONT sw - BU COMM: S BAND XMTR/RCVR sw - SEC S BAND PWR AMPL sw - SEC S BAND VOICE sw - DN VOICE BU S BAND RANGE sw - OFF/RESET VHF A RCVR sw - ON VHF B XMTR sw - VOICE COMM ANT: S BAND sel - FWD or AFT	Reacquire S-band.

CREW-MAN	PNL	PROCEDURES	REMARKS
		5.3.13.3 Reconfigure (cont)	
	12	4. AUDIO: S BAND T/R sw - S BAND T/R ICS T/R sw - ICS T/R MODE sw - ICS/PTT VHF A sw - RCV VHF B sw - T/R	
	5/6	5. Eng STOP pb/lt - reset	
		5.3.14 EXTRAVEHICULAR TRANSFER (STAGED VEHICLE)	Assumptions: (1) Crewman cannot perform IVT, (2) OPS are on cabin floor, and (3) vehicle staged.
		5.3.14.1 Subsystem Preparation for Egress	
		ECS Periodic Monitoring (Staged) (required)	Ref para 4.13.1.3
		EPS Periodic Monitoring (Staged) (required)	Ref para 4.13.4.6
		LGC Power-Down (P06) (required)	Ref para 4.6.1.2
CDR	11	1. CB S/C: ATT DIR CONT - open	Assumption: CSM is controlling attitude.
	8	2. ED: MASTER ARM sw - ON	Switch is left on to inhibit spurious CWEA indications.
		3. ED: STAGE sw - SAFE (guarded) • LDG GEAR DEPLOY tb - bp	
	1	4. ENG THR CONT: ENG ARM sw - OFF GUID CONT sw - PGNS ABORT pb - reset ABORT STAGE pb - reset	
	3	5. DES ENG CMD OVRD sw - OFF S/C: ROLL, PITCH, YAW sw - MODE CONT PGNS sw - OFF	
	11	6. CB RCS SYS A: QUAD 1, 2, 3, 4 TCA - open CB ED: LOGIC PWR A - open	

CREW-MAN	PNL	PROCEDURES	REMARKS
		5.3.14.1 Subsystem Preparation for Egress (cont)	
		CB S/C: ABORT STAGE - open CB PGNS: LGC/DSKY - open	
LMP	16	7. CB RCS SYS B: QUAD 1, 2, 3, 4 TCA - open CB ED: LOGIC PWR B - open CB S/C: ABORT STAGE - open CB LTG: TRACK - open	
		5.3.14.2 Final Subsystem Preparation for EVT	
CDR	11	1. CB ECS: CABIN FAN - open	
LMP	16	2. CB ECS: LCG PUMP - open	
	3	3. LTG: EXTERIOR LTG sw - OFF	

PARA	TITLE	PAGE
5.4	Contingency Management Procedures	5.4-2
5.4.1	EPS Prestaging Check - Lunar Contingency (One Ascent Battery only)	5.4-2
5.4.2	PLSS Makeup to LM Suit Loop via PGA Interface	5.4-3
5.4.3	PLSS 02 Transfer to LM Suit Loop via Manifold	5.4-4
5.4.4	PLSS H20 Transfer to LM Sublimator	5.4-4
5.4.5	ARS Configuration for use of CM LiOH Cartridges	5.4-5
5.4.6	AGS Passive Thermal Control (PTC) for LM/CM Configuration	5.4-6
5.4.7	AGS Passive Thermal Control (PTC) for LM/CSM Configuration	5.4-8
5.4.8	PGNCS Passive Thermal Control (PTC) for LM/CSM Configuration	5.4-9
5.4.9	LM Staging While Docked with CM only	5.4-11
5.4.10	LM/LGC-Controlled Spin Stabilization of CM	5.4-13
5.4.11	LM/AGS-Controlled Spin Stabilization of CM	5.4-14
5.4.12	Minimizing DPS Supercritical Helium Pressure Rise at Start of Burn	5.4-15
5.4.12A	DPS Supercritical Helium Venting (Zero G, Docked Only)	5.4-16
5.4.13	Deleted	
5.4.14	DPS Supercritical Helium Vent During a Burn	5.4-17
5.4.15	Loss of Both Ascent H20 Tanks	5.4-19
5.4.16	Loss of Both Ascent 02 Tanks	5.4-20
5.4.17	Loss of Both Press Regs (Failed Closed)	5.4-21
5.4.18	Loss of Both Suit Fans	5.4-22
5.4.19	Optimization of APS Helium Manifold Leak	5.4-23
5.4.20	Ascent Stage Oxygen Tank Bleed-Down Procedure	5.4-24A
5.4.21	Ascent Stage Oxygen Tank Top-Off Procedure	5.4-24B
5.4.22	Descent 02 Venting	5.4-24B
5.4-23	Loss of Manual and Auto APS Start Capability	5.4-25
5.4-24	Loss of Manual and Auto APS Start Capability (with loss of one bus)	5.4-31
5.4-25	Loss of ED Sub-system	5.4-35

CREW-MAN	PNL	PROCEDURES	REMARKS
		5.4 CONTINGENCY MANAGEMENT PROCEDURES	Continengcy management procedures provide "life-boat" support for the CSM, and long-term operation during a nonnominal vehicle situation.
		5.4.1 EPS PRESTAGING CHECK - LUNAR CONTINGENCY (ONE ASCENT BATTERY ONLY)	
		CAUTION Thirty minutes before lunar launch, usable ascent battery must be placed on-line, on both normal & backup feed paths. Descent batteries No. 1 & 3 must be removed from line & CB EPS: CROSS TIE BAL LOADS (2) opened at this time.	
LMP	14	1. EPS: POWER/TEMP MON sel - good BAT 5 (6) VOLTS ind - 31.5 to 37.2 volts BAT 5 (6) NORMAL SE (CDR) FEED sw - ON; tb - gray BAT 5 (6) BACK UP CDR (SE) FEED sw - ON; tb - gray VOLTS ind - 28.0 to 32.5 volts AMPS ind - TBD	
		2. EPS: SE BAT 1 HI VOLT sw - OFF/RESET; tb - bp CDR BAT 3 HI VOLT sw - OFF/RESET; tb - bp	
LMP	16	3. CB EPS: CROSS TIE BAL LOADS - open	
		CAUTION Twenty minutes before lunar launch, descent battery No. 2 must be removed from line. Final IMU alignment must not take place before removal of this battery.	Ref para 4.9.3.1.

LM 3231

CREW-MAN	PNL	PROCEDURES	REMARKS
		5.4.1 EPS PRESTAGING CHECK - LUNAR CONTINGENCY (ONE ASCENT BATTERY ONLY) (cont)	
LMP	14	4. EPS: SE BAT 2 HI VOLT sw - OFF/RESET; tb - bp	
		CAUTION Seven minutes before lunar launch, descent battery No. 4 must be removed from line.	If unexpected transient occurs, torquing procedure (para 4.9.1.4 or 4.9.3.1) may be required at this time to realign IMU.
		5. EPS: CDR BAT 4 HI VOLT sw - OFF/RESET; tb - bp	
		5.4.2 PLSS MAKEUP TO LM SUIT LOOP VIA PGA INTERFACE	Procedure could provide 2.11 pounds of oxygen for -6 PLSS; 3.18 pounds for -7 PLSS.
	ECS 11 16	1. Verify LM configured for egress mode: PRESS REG A & B vlvs, EGRESS SUIT GAS DIVERTER vlv - PULL EGRESS CABIN GAS RETURN vlv - EGRESS SUIT ISOL vlv (CDR) - SUIT FLOW SUIT ISOL vlv (LMP) - SUIT FLOW CB ECS: CABIN FAN - open CB ECS: CABIN REPRESS - open LM O2 umbilicals connected to PGA (red to red, blue to blue).	Assumptions: (1) Cabin is depressurized, (2) LM O2 is depleted, or (3) LM O2 must be conserved.
		2. Don PLSS.	
		3. Connect PLSS O2 hoses to PGA (red to red, blue to blue).	
	PLSS	4. PRIM O2 SHUTOFF vlv - LOCKED ON (aft)	
	ECS	5. DES O2 vlv - CLOSE	
		6. #1 ASC O2 vlv - CLOSE	
		7. #2 ASC O2 vlv - CLOSE	
		8. PLSS FILL vlv - CLOSE	
		9. PRESS REG A vlv - CLOSE	
		10. PRESS REG B vlv - CLOSE	

CREW-MAN	PNL	PROCEDURES	REMARKS
		5.4.3 PLSS 02 TRANSFER TO LM SUIT LOOP VIA MANIFOLD	Extra oxygen provided by this procedure would be 2.11 pounds for -6 PLSS and 3.18 pounds for -7 PLSS.
		1. Open PLSS thermal insulation flap to expose 02 fill fitting. Remove dust cap.	If PLSS H20 is to be expelled by PLSS 02, do not allow PLSS 02 quantity to decrease below 5% (approx 150 psia).
		2. Unstow LM 02 recharge hose, remove dust cap, & connect hose to PLSS 02 fill fitting.	
		3. Don helmets & gloves.	
	ECS	4. SUIT GAS DIVERTER vlv - PUSH CABIN PRESS REG A & B vlvs - CABIN CABIN REPRESS vlv - CLOSE CABIN GAS RETURN vlv - AUTO SUIT CIRCUIT RELIEF vlv - AUTO #1 & #2 ASC 02 vlvs - CLOSE DES 02 vlv - CLOSE	
		5. PLSS FILL vlv - OPEN	MSFN monitors PLSS 02 pressure (GT8182P/GT8282P) to determine when PLSS 02 is depleted. MSFN can also monitor manifold pressure (GF3589P) to determine when PLSS 02 is depleted.
		6. Upon MSFN direction: PLSS FILL vlv - CLOSE	
		7. Disconnect LM 02 recharge hose from PLSS 02 fill fitting & install dust caps.	
		8. Stow 02 recharge hose & secure PLSS flap.	
		5.4.4 PLSS H20 TRANSFER TO LM SUBLIMATOR	Amount of extra water provided by this procedure would be 16.8 pounds for -6 PLSS and 21.6 pounds for -7 PLSS.
	PLSS	1. H20 SHUTOFF AND RELIEF vlv - CLOSED (fwd)	
		2. Open PLSS thermal insulation flap to expose H20 fill & drain fittings.	
		3. Remove PLSS H20 drain fitting dust cap.	

RC 1606

CREW-MAN	PNL	PROCEDURES	REMARKS
		5.4.4 PLSS H20 TRANSFER TO LM SUBLIMATOR (cont)	
		4. Vent PLSS H20 drain connector to cabin ambient, using connector from small urine collection assembly.	Hole must be cut into bag to vent cabin ambient.
	2	5. When ECS: H20 QUANTITY ind readings are 10%, proceed to next step.	
	ECS	6. ASC H20 vlv - CLOSE DES H20 vlv - CLOSE	
		7. Unstow LM H20 recharge hose & disconnect H20 dispenser.	
	PLSS	8. Remove dust cap from PLSS H20 fill fitting & connect LM H20 recharge hose.	
	ECS	9. ASC H20 vlv - OPEN When it has been determined (on signal from MSFN) that PLSS feedwater is near depletion, proceed with next step.	
		10. ASC H20 vlv - CLOSE	
	PLSS	11. Disconnect LM H20 recharge hose from PLSS H20 fill fitting & install dust cap.	
		12. Remove venting connector from PLSS H20 drain connector & install dust cap.	
		13. Secure PLSS.	
		14. Repeat steps 1 through 13 for second PLSS.	
		15. Connect H20 dispenser to LM H20 recharge hose & stow.	

RC 1606, LM 3247

CREW-MAN	PNL	PROCEDURES	REMARKS
		5.4.5 ARS CONFIGURATION FOR USE OF CM LiOH CARTRIDGES	Assumptions: (1) CM and LM are docked, (2) LM LiOH cartridges are expended, (3) CM LiOH cartridges and adapters are available, and (4) LM O2 hoses are disconnected from PGA's.
	2	1. SUIT FAN sel - 1	
	ECS	2. CO2 CANISTER SEL vlv - SEC (secondary cartridge removed)	
		3. SUIT ISOL vlv (CDR & LMP) - SUIT DISC	
		4. SUIT GAS DIVERTER vlv - PULL EGRESS	
		5. CABIN GAS RETURN vlv - EGRESS	
		6. SUIT CIRCUIT RELIEF vlv - CLOSE	
		7. Attach both LM O2 return (red) hoses to CM LiOH cartridge adapters.	See figure 5-1.
		8. Tape closed approx one-half of opening of each LM O2 supply (blue) hose.	Simulates suit pressure drop.
		9. Position LiOH cartridge adapters to preclude obstructing crew activities.	
		10. Position LM O2 supply (blue) hoses to obtain desired direction of flow.	
		11. SUIT ISOL vlv (CDR & LMP) - SUIT FLOW	

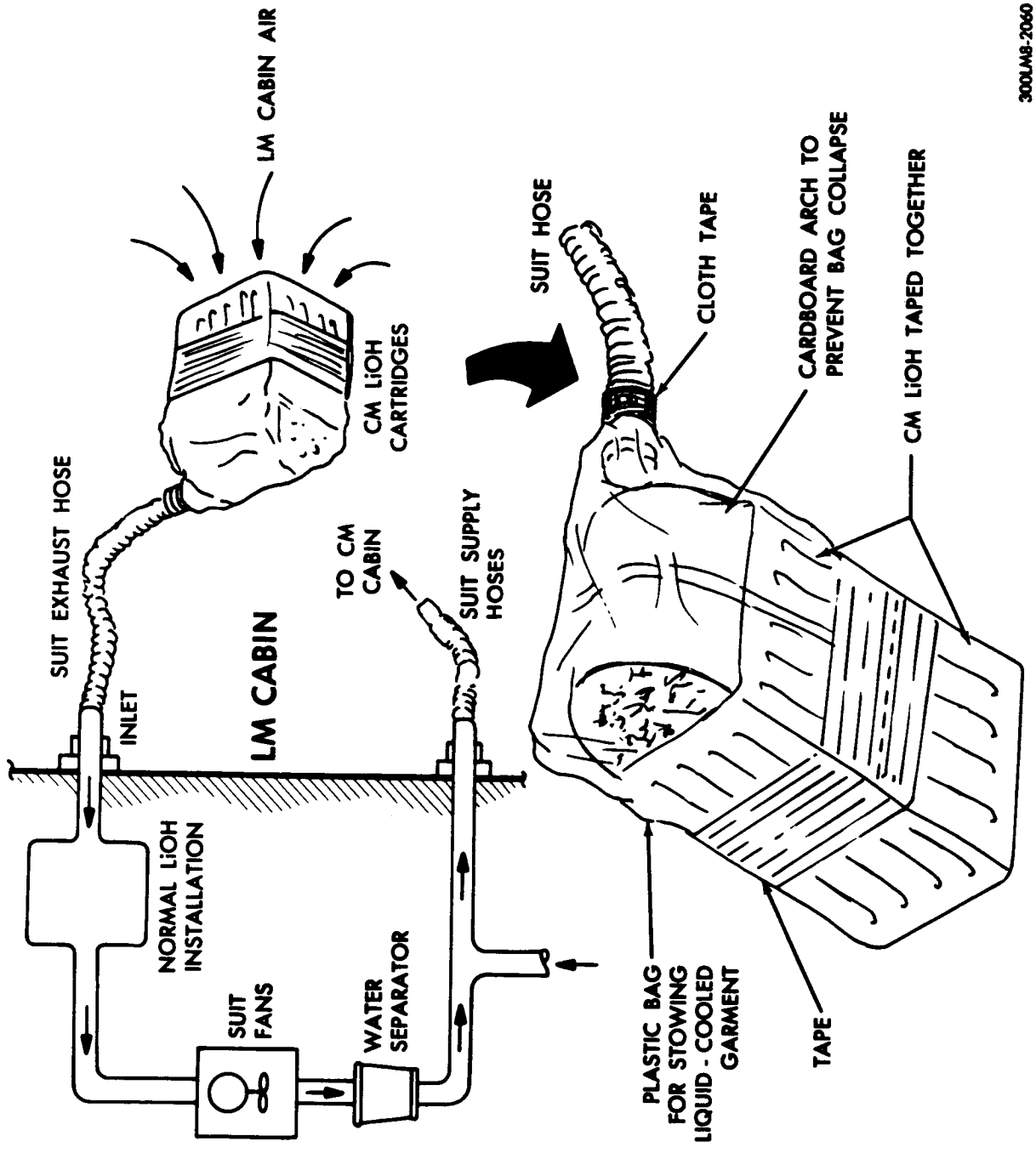

Figure 5-1. Supplemental Carbon Dioxide Removal System

LM 3247

CREW-MAN	PNL	PROCEDURES	REMARKS
		5.4.6 AGS PASSIVE THERMAL CONTROL (PTC) FOR LM/CM CONFIGURATION	Procedure documents necessary steps for AGS-controlled PTC mode of LM/CM configuration.
		Appropriate subsystem activation	Determined by real time conditions
		AGS Power-Up (required)	Ref para 4.6.2.1.
		AGS Checkout (desired)	Ref para 4.6.2.4.
		AGS Alignment (required)	Ref para 4.9.2. Any alignment may be used; i.e., body-axis alignment. Body-axis realignment at initial PTC attitude (step 3) may be desirable.
		1. Establish AGS total attitude & attitude rate displays:	Ref para 4.5.3.3 and 4.5.3.5.
	1,2	ATTITUDE MON sw - AGS	
		ORDEAL:	
		FDAI 1 sw - INRTL	
		FDAI 2 sw - INRTL	
	1,2	RATE/ERR MON sw - LDG RDR/CMPTR	
	1	RATE SCALE sw - 5°/SEC	
		2. Configure for control mode:	
	3	S/C:	
		AGS sw - ATT HOLD	
		ROLL, PITCH, YAW sw - MODE CONT	
		DEAD BAND sw - MAX	
	1	GUID CONT sw - AGS	
		ENG THR CONT:	
		BAL CPL sw - ON	
		ATT/TRANSL sw - 2 JETS	
		3. Maneuver via ACA to initial PTC attitude. S/C: ROLL, PITCH, YAW sw - MODE CONT	
		4. Allow AGS to limit cycle for approx 20 min, then: S/C: ROLL, PITCH, YAW sw - PULSE	Provides automatic damping.
	ACA	5. ACA - YAW for approx 2 sec (0.3°/sec)	Time depends on vehicle weight.
		5.4.7 AGS PASSIVE THERMAL CONTROL (PTC) FOR LM/CSM CONFIGURATION	Procedure documents necessary steps for AGS-controlled PTC mode of LM/CSM configuration.
		Appropriate subsystem activation	Determined by real time conditions

LM 3247

CREW-MAN	PNL	PROCEDURES	REMARKS
		5.4.7 AGS PASSIVE THERMAL CONTROL (PTC) FOR LM/CSM CONFIGURATION (cont)	
		AGS Power-Up (required)	Ref para 4.6.2.1.
		AGS Checkout (desired)	Ref para 4.6.2.4.
		AGS Alignment (required)	Ref para 4.9.2. Any alignment may be used; i.e., body-axis alignment. Body-axis realignment at initial PTC attitude (step 4) may be desirable.
	1,2	1. Establish AGS total attitude & attitude rate displays: ATTITUDE MON sw - AGS ORDEAL: FDAI 1 sw - INRTL FDAI 2 sw - INRTL	Ref para 4.5.3.3 and 4.5.3.5.
	1,2 1	RATE/ERR MON sw - LDG RDR/CMPTR RATE SCALE sw - 5°/SEC	
	3 1	2. Configure for control mode: S/C: ROLL, PITCH, YAW sw - PULSE AGS sw - ATT HOLD GUID CONT sw - AGS ENG THR CONT: BAL CPL sw - ON ATT/TRANSL sw - 2 JETS	
	3 TTCA	S/C: DEAD BAND sw - MIN THROTTLE/JETS cont (CDR & LMP) - JETS	
	ACA 3	3. Maneuver via TTCA to initial PTC attitude. ACA - out of detent (momentarily) S/C: YAW sw - MODE CONT	
		4. After vehicle rates become <0.05°/sec: S/C: YAW sw - PULSE	Rates may be determined by use of starfield in COAS or AOT fields of view or FDAI error needles appearing motionless.
		5. ACA - YAW for approx 2 sec (0.3°/sec)	Time depends on vehicle weight.
		5.4.8 PGNCS PASSIVE THERMAL CONTROL (PTC) FOR LM/CSM CONFIGURATION	If CSM is unable to use SM RCS jets, this procedure may be used to initiate PTC mode.

LM 3207, LM 3241

CREW-MAN	PNL	PROCEDURES	REMARKS
		5.4.8 PGNCS PASSIVE THERMAL CONTROL (PTC) FOR LM/CSM CONFIGURATION (cont)	
		Appropriate subsystem activation	Determined by real time conditions
		LGC Power-Up (required)	Ref para 4.6.1.1.
		IMU Power-Up (LGC Operating) (required)	Ref para 4.6.1.3.
		IMU Alignment (required)	Any IMU alignment will suffice; i.e., crescent alignment. (Ref para 4.9.1.6.)
		DAP Data Load Routine (R03) (required)	Ref para 4.6.1.8.
		1. Establish PGNCS total attitude & attitude rate displays:	Ref para 4.5.3.1, 4.5.3.2, and 4.5.3.5.
	1,2	ATTITUDE MON sw - PGNS	
		ORDEAL:	
		FDAI 1 sw - INRTL	
		FDAI 2 sw - INRTL	
	1,2	RATE/ERR MON sw - LDG RDR/CMPTR	
		Key V60E	PGNS attitude rates on error needles.
	1	RATE SCALE sw - 5°/SEC	
	1	2. GUID CONT sw - PGNS	Sets up LGC control mode for manual maneuver to initiate PTC attitude.
	3	S/C:	
		ROLL, PITCH, YAW sw - MODE CONT	
		PGNS sw - ATT HOLD	
		Key V76E	
		3. Maneuver via TTCA to PTC attitude.	
		4. S/C: PGNS sw - AUTO	
		Wait 10 min	MSFN can also determine vehicle rates.
		5. Key V25 N07E	Prepares for disabling of downward firing RCS jets, which will reduce LGC jet-control authority.
		Key 1257E	
		Key 252E	
		Verify RCS: SYS A & SYS B QUADswitches are set to ENABLE.	
		Key 1E	
		6. Establish new reference:	Next step will reduce deadband. This step ensures that vehicle will not be outside deadband, by establishing new reference.
		a. Key V77E	
		NO DAP 1t - off	
		or	
		b. S/C: PGNS sw - ATT HOLD, then AUTO	

LM

CREW-MAN	PNL	PROCEDURES	REMARKS
		5.4.8 PGNCS PASSIVE THERMAL CONTROL (PTC) FOR LM/CSM CONFIGURATION (cont)	
		7. Key V48E FL V06 N46 - DAP configuration Key V21E, 2XX1XE Key PRO FL V06 N47 - Vehicle weights Key V34E	Step 7, when completed, transfers jet-failure data into DAP phase plane structure.
		8. Wait 15 min.	
		9. Alternative PTC procedures: a. Manual: Key V76E NO DAP 1t - on S/C: PGNS sw - ATT HOLD Yaw right approx 30 pulses	Sets up LGC minimum impulse mode. Initiates vehicle rates of approximately 0.3°/second. Number of pulses depends on vehicle weight.
		b. Erasable memory programmed: Key V72E - Scatter E-memory update FL V21 N01 - Load number of DSKY loads Key 5E FL V21 N01 - Load address Key 3237E FL V21 N01 - Load value Key 77775E FL V21 N01 - Load address Key 3242E	E6 1637 in Luminary 1E. Approximately 0.3°/second rate of change of CDU angle (DELCDUX).
		FL V21 N01 - Load value Key 00155E FL V21 N02 Key V33 - Jet activity begins when ENTR pb is keyed. S/C: PGNS sw - ATT HOLD Key V76E NO DAP 1t - on	E6 1642 = P (yaw) axis desired attitude maneuver rate per Luminary 1E. 0.3°/second rate. Prevents DAP firings after PTC is initiated.
		5.4.9 LM STAGING WHILE DOCKED WITH CM ONLY	Purpose of LM Staging While Docked With CM Only procedure is to prepare for spin stabilization of CM via LM before reentry in contingency situation.
		Appropriate subsystem activation	Determined by real time conditions

CREW-MAN	PNL	PROCEDURES	REMARKS
		5.4.9 LM STAGING WHILE DOCKED WITH CM ONLY (cont)	
		AGS Power-Up (required)	Ref para 4.6.2.1.
		AEA Self-Test (desired)	Ref para 4.6.2.3.
		LGC Power-Up (desired)	Ref para 4.6.1.1.
		LGC Self-Test (desired)	Ref para 4.6.1.13.
		IMU Power-Up (LGC Operating) (desired)	Ref para 4.6.1.3.
		MSFN update, applicable REFSMMAT and state vector (required)	Ref para 4.6.1.7.
		EPS Prestaging Check (required)	Ref para 4.12.5.
		ED Prestaging Check (required)	Ref para 4.12.6.
		ECS Prestaging Check (required)	Ref para 4.12.7.
		DAP Data Load (R03) (required if PGNS up)	Ref para 4.6.1.8.
		1. Select attitude control:	
	1	GUID CONT sw - AGS	AGS control avoids problems associated with DAP settings at staging.
	3	S/C:	
		ROLL, PITCH, YAW sw - MODE CONT	
		AGS sw - ATT HOLD	
		PGNS sw - ATT HOLD	
		DEAD BAND sw - MIN	
		2. Enable ACA/TTCA:	Ref para 4.5.2.5.
	4	TTCA/TRANSL sw (CDR & LMP) - ENABLE	
	TTCA	THROTTLE/JETS cont (CDR & LMP) - JETS	
	1	ENG THR CONT:	
		BAL CPL sw - ON	
		ATT/TRANSL sw - 4 JETS	
	1,2	ACA PROP sw - ENABLE	
		3. Select attitude/attitude error display:	
	1,2	ATTITUDE MON sw - AGS	
		RATE/ERR MON sw - LDG RDR/CMPTR	
	ACA	4. ACA - maneuver to staging attitude	

LM

CREW-MAN	PNL	PROCEDURES	REMARKS
		5.4.9 LM STAGING WHILE DOCKED WITH CM ONLY (cont)	
	14	5. EPS: SE BAT 1 HI VOLT sw - OFF/RESET; tb - bp SE BAT 2 HI VOLT sw - OFF/RESET; tb - bp CDR BAT 3 HI VOLT sw - OFF/RESET; tb - bp CDR BAT 4 HI VOLT sw - OFF/RESET; tb - bp DES BATS sw - DEADFACE; tb - bp	
	1	6. Set EVNT TMR ind.	
		7. Select Thrust Monitor Program: Key V37E 47E	
		8. FL V16 N83 - ΔV (LM) R1 X XXXX.X fps R2 Y XXXX.X fps R3 Z XXXX.X fps	
		9. Call VDX: Key DEDA C 404+00000E C 405+00000E C 406+00000E C 470R	
	ACA	10. ACA - out of detent	Zeroes error needles.
	8	11. ED: MASTER ARM sw - ON	
	1 TTCA	12. When EVNT TMR ind - 00:00: TTCA - move down & hold	
		When ΔVX = -0.3 to -0.5 fps: TTCA - center	
	8 TTCA	ED: STAGE sw - FIRE TTCA - move up & hold	
		When ΔVX = 0: TTCA - center	
	11 16	13. CB ED: LOGIC PWR A - open CB ED: LOGIC PWR B - open	
		14. Key PRO or V34E to terminate ΔV monitoring FL V37 N-- Key XXE, exit P47	

LM 3247

CREW-MAN	PNL	PROCEDURES	REMARKS
		5.4.10 LM/LGC-CONTROLLED SPIN STABILIZATION OF CM	Procedure documents DSKY procedure for implementing LGC-controlled spin (20°/second) about LM X-axis. Assumptions: (1) SM has been staged, (2) LM has been staged (ref para TBD), and (3) LM and CM are stowed.
		Appropriate subsystem activation	Determined by real time conditions
		LGC Power-Up (required)	Ref para 4.6.1.1.
		IMU Power-Up (LGC Operating) (required)	Ref para 4.6.1.3.
		DAP Data Load Routine (R03) (required)	Ref para 4.6.1.8.
			N46 R1 = 3XXXX N47 R1 = 14,462 pounds (minimum) R2 = actual weight
	1	1. Establish total attitude & attitude rate displays: ATTITUDE MON sw - PGNS ORDEAL: FDAI 1 sw - INRTL FDAI 2 sw - INRTL	Ref para 4.5.3.1 and 4.5.3.5.
	1	RATE SCALE sw - 25°/SEC	
	1 3	2. GUID CONT sw - PGNS S/C: PGNS sw - ATT HOLD Key V77E NO DAP 1t - off	
		3. Key V72E - Scatter E-memory update FL V21 N01 - Load number of DSKY loads Key 5E FL V21 N01 - Load address Key 3237E FL V21 N01 - Load value Key 77511E FL V21 N01 - Load address Key 3242E FL V21 N01 - Load value of desired rate Key 16162E FL V21 N02 Key V33 - Jet activity commences when ENTR is keyed.	E6 1637 in Luminary 1E. E1642 = P (Yaw) axis desired attitude maneuver rate per Luminary 1E. Do not use ACA or DSKY after ENTR, because of possibility of LGC stopping rate.

LM

CREW-MAN	PNL	PROCEDURES	REMARKS
		5.4.10 LM/LGC-CONTROLLED STABILIZATION OF CM (cont)	
		4. Crew transfer to CM.	
		5.4.11 LM/AGS-CONTROLLED SPIN STABILIZATION OF CM	Procedure documents method of implementing manual (AGS) 20°/second spin about LM X-axis.
		Appropriate subsystem activation	Determined by real time conditions
		AGS Power-Up (required)	Ref para 4.6.2.1.
		AGS Checkout (desired)	Ref para 4.6.2.4.

LM 2020A

CREW-MAN	PNL	PROCEDURES	REMARKS
		5.4.11 LM/AGS-CONTROLLED SPIN STABILIZATION OF CM (cont)	
	3	1. S/C: YAW sw - DIR PITCH, ROLL sw - MODE CONT AGS sw - ATT HOLD	
	1	RATE SCALE sw - 25°/SEC GUID CONT sw - AGS	
	ACA	2. ACA - Ysw until 20°/sec attained	
		3. Crew transfer to CM.	
		5.4.12 MINIMIZING DPS SUPERCRITICAL HELIUM PRESSURE RISE AT START OF BURN	This procedure is required if DPS supercritical helium (SHe) pressure exceeds 1700 psia at start of burn. Procedure prevents SHe burst disk from blowing shortly after start of burn and resultant complete loss of SHe.
		NOTE Add to any DPS thrusting procedure or powered descent.	
		1. MPS: Initiate burn without ambient DPS pressurization if first burn.	Ref para 4.2.29.
	1	2. DES He REG 2 sw - OPEN; tb - gray	
	8	3. Five seconds after ignition, vent SHe through vent valves: ED: MASTER ARM sw - ON DES VENT sw - FIRE MASTER ARM sw - OFF	Possible MASTER ALARM when ED: MASTER ARM sw - OFF, due to relay race removing CWEA inhibit.
		4. DES PROPUL: OXID VENT sw - OPEN; tb - gray FUEL VENT sw - OPEN; tb - gray	
	1 8	5. When MPS: HELIUM ind - SHe press decreasing or after five seconds of venting (whichever is longer) DES PROPUL: OXID VENT sw - CLOSE; tb - bp FUEL VENT sw - CLOSE; tb - bp	

LM 2020A

CREW-MAN	PNL	PROCEDURES	REMARKS
		5.4.12 MINIMIZING DPS SUPERCRITICAL HELIUM PRESSURE RISE AT START OF BURN (cont)	
	1	6. DES He REG 2 sw - CLOSE; tb - bp	
		5.4.12A DPS SUPERCRITICAL HE VENTING (ZERO G, DOCKED ONLY)	This procedure is required if supercritical helium (SHe) pressure exceeds SHe burst disc range (1881 to 1967 psia) or fracture-mechanics limits as defined in SODB. Assumptions: (1) SHe squib has been blown, since pressure should never reach this high pressure case unless DPS has been burned and (2) RCS has also been pressurized, since there should have been at least one DPS burn.
	1	1. GUID CONT sw - AGS	A+1°/sec pitch rate is established to settle DPS propellant to assure a gaseous vent. Rate will be maintained for 1 minute prior to venting to assure settling.
	3	2. S/C: ROLL, PITCH, YAW sw - PULSE DEADBAND sw - MAX AGS sw - ATT HOLD	
		3. Establish +1°/sec pitch rate via TTCA (use +Z translation). Wait 1 min.	
		4. Controls - MPS Basic (Unstaged)	Ref para 4.13.3.1.
	1	5. DES He REG 1 sw - CLOSE; tb - bp	ULLAGE is to be vented without SHe flow.
	8	6. DES PROPUL: OXID VENT sw - OPEN; tb - gray FUEL VENT sw - OPEN; tb - gray	
		7. ED: MASTER ARM sw - ON DES VENT sw - FIRE MASTER ARM sw - OFF	Possible MASTER ALARM when ED; MASTER ARM sw - OFF. During venting, PITCH rate will increase.
	1	8. MPS: FUEL/OXID PRESS ind - verify ULLAGE press decreasing. When FUEL/OXID PRESS ind - 30 psia DES PROPUL:	Vent termination SHe pressure is a function of several variables; MSFN must provide this data.

CREW-MAN	PNL	PROCEDURES	REMARKS
		5.4.12A DPS SUPERCRITICAL HE VENTING (ZERO G, DOCKED ONLY) (cont) FUEL VENT sw - CLOSE; tb - bp OXID VENT sw - CLOSE; tb - bp 9. DES He REG 1 sw - OPEN; tb - gray DES He REG 2 sw - OPEN; tb - gray 10. Null out Pitch Rate via TTCA S/C: ROLL, PITCH, YAW sw - as desired 5.4.13 Deleted	SHe is vented into propellant tanks. Can be verified by increasing ullage pressures. Should ullage pressure minus reg outlet press exceed 3 psi, the crew may be requested by MSFN to cycle open the FUEL and OXID VENT valves.

LM 2020A

CREW-MAN	PNL	PROCEDURES	REMARKS
		5.4.14 DPS SUPERCRITICAL HELIUM VENT DURING A BURN	This procedure is required for any critical burn if the projected supercritical helium (SHe) pressure rise rate causes SHe pressure to exceed 1800 psi prior to that critical burn
		NOTE Assumes normal activation for a DPS burn (either 30 min or 2 hr).	
		Add to any DPS thrusting procedure.	A 10 percent throttle setting should be used for burn.
		1. MPS: Initiate burn without ambient DPS pressurization if first burn.	Ref para 4.2.31.
	1	2. DES He REG 2 sw - OPEN; tb - gray	
	8	3. Five sec. after ignition, vent SHe through vent valves: ED: MASTER ARM sw - ON DES VENT sw - FIRE MASTER ARM sw - OFF	Possible MASTER ALARM when ED: MASTER ARM sw - OFF, due to relay race removing CWEA inhibit
		4. DES PROPUL: OXID VENT sw - OPEN; tb - gray FUEL VENT sw - OPEN; tb - gray	
		5. After TBD sec of venting SHe - DES PROPUL: OXID VENT sw - CLOSE; tb - bp FUEL VENT sw - CLOSE; tb - bp DES He REG 1 sw - CLOSE; tb - bp DES He REG 2 sw - CLOSE; tb - bp	Time of vent will be supplied by MSFN (every 5 sec = 1 lb. SHe). The DES REG SOVS are closed to prevent freezing the Fuel/He Heat Exchanger, should the vent valves take a while to fully seat.
		6. Stop burn no less than five seconds from termination of vent.	

LM 20...A

CREW-MAN	PNL	PROCEDURES	REMARKS
		5.4.15 LOSS OF BOTH ASCENT H2O TANKS	This procedure provides for crew and spacecraft thermal control in event that both ascent H2O tanks are lost.
		1. Lunar stay - no action required	
		2. Preparation for lift-off -	
		ECS Basic (Staged), except:	Ref para 4.13.1.1.
		a. Fill drink bags with descent water	
		b. At lift-off -1 hour, activate secondary glycol loop:	Ref para 4.13.1.4.
	16 ECS	CB ECS: GYLCOL PUMP SEC - close	
		PRI EVAP FLOW #2 vlv - OPEN	
		SEC EVAP FLOW vlv - OPEN	
		LIQUID GARMENT COOLING vlv - COLD	Use as required.
		c. WATER TANK SELECT vlv - DES	
		d. Just before lift-off:	
		LIQUID GARMENT COOLING vlv - HOT	
		3. Ascent -	
		a. Insertion:	
		Perform normal insertion	
		b. Post insertion:	
	ECS	(1) PRI EVAP FLOW #1 & #2 vlv - CLOSE	Water separator is now dead-headed.
		(2) SEC EVAP FLOW vlv - CLOSE	When H2O SEP comp caut lt - on, switch to other separator.
		(3) Doff Helmets & gloves	
		(4) PRESS REG A & B vlv - CABIN	
		(5) CABIN GAS RETURN vlv - AUTO	

CREW-MAN	PNL	PROCEDURES	REMARKS
		5.4.15 LOSS OF BOTH ASCENT H2O TANKS (cont)	
	2	(6) SUIT GAS DIVERTER vlv - PUSH CABIN (7) SUIT FAN sel - 2	Use cold fan to minimize water usage.
	ECS	When subliminators are dry: (8) SUIT FAN sel - OFF (Cycle suit fan on/off for CO_2 level control) (9) SUIT ISOL vlvs - SUIT DISC (crew preference) (10) Power down equipment per Loss-of-Cooling Timeline.	
		c. Post CSI: Doff suits & stow	
		5.4.16 LOSS OF BOTH ASCENT O2 TANKS	This procedure provides for O2 management in event that both ascent O2 tanks are lost.
		1. Lunar stay pre-launch prep:	
	ECS 2 ECS	a. CABIN REPRESS vlv - MANUAL until ECS: CABIN PRESS ind - 5.2 psia, then: CABIN REPRESS vlv - CLOSE	
		b. Don OPS in CEVT configuration.	If cabin pressure is lost (zero psia), OPS O2 - ON.
	ECS	c. Just before lift-off: PLSS FILL vlv - CLOSE #1 ASC O2 vlv - CLOSE #2 ASC O2 vlv - CLOSE DES O2 vlv - CLOSE	If failure occurs before final jettison, both PLSS's should be retained and recharged for possible later use.
		2. Ascent	
		a. Perform normal insertion: #1 ASC O2 vlv - CLOSE CABIN GAS RETURN vlv - AUTO	ECS Basic (Staged), ref para 4.13.1.1.
		b. Post-Insertion: Doff helmet & gloves CABIN GAS RETURN vlv - AUTO SUIT GAS DIVERTER vlv - PUSH CABIN	Assuming a 0.23 lb/hour O2 use rate (0.06 + 0.17), it takes 5.6 hours to reach 4.0 psia. If use rate is such that cabin pressure would be below 3.5 psia before rndz/docking, a portion of each OPS bottle would be available for makeup.

CREW-MAN	PNL	PROCEDURES	REMARKS
		5.4.17 LOSS OF BOTH PRESS REGS (FAILED CLOSED)	This procedure provides for O2 control without automatic regulator capability.
		1. Failure occurred with cabin depressurized:	Assumption: LM configured for Cabin Depressurization, ref para 4.13.1.7.
	ECS	a. Cabin relief & dump vlv (fwd) - AUTO	
		b. Cabin relief & dump vlv (ovhd) - AUTO	
		c. CABIN REPRESS vlv - AUTO	
	16	CB ECS: CABIN REPRESS - close	
	1,2	MASTER ALARM - on	
	1	CABIN warn lt - on	
	ECS	CABIN GAS RETURN vlv - AUTO	Supplies O2 to ARS when cabin pressure exceeds ARS pressure. Time to breathe ARS from 3.6 psia to 3.3 psia (min allowable) is approximately 3 minutes in a closed suit loop configuration. To prevent hypoxia, immediate activation of this procedure is essential.
	1	d. CABIN warn lt - off	CABIN warn lt goes off when cabin pressure reaches 4.4 to 5.0 psia.
	ECS	e. PRESS REG A & B vlv - CABIN	
		f. SUIT GAS DIVERTER vlv - PULL EGRESS	
		2. Failure occurred with cabin pressurized:	Assumption: LM configured for ECS Basic (staged or unstaged), ref para 4.13.1.1.
		a. CABIN GAS RETURN vlv - AUTO	
		b. SUIT GAS DIVERTER vlv - PULL EGRESS	When CABIN REPRESS vlv is actuated, SUIT GAS DIVERTER vlv would automatically go to PULL EGRESS if it were in PUSH CABIN position.
		c. CABIN REPRESS vlv - AUTO	CABIN REPRESS vlv will keep cabin pressure above 3.7 psia minimum.
		d. PRESS REG A & B vlv - CABIN	

CREW-MAN	PNL	PROCEDURES	REMARKS
		5.4.18 LOSS OF BOTH SUIT FANS	This procedure provides for CO_2 control in event that both suit fans are lost. As a result of this failure, CO_2 sensor indications will be inaccurate.
		1. Failure during lunar stay -	
		a. PLSS available:	
		(1) Doff helmets & gloves	
	11	(2) CB ECS: CABIN FAN - close	
		(3) Connect PLSS hose to PGA's (red to blue, blue to red)	
		(4) Don PLSS with RCU	
	RCU	(5) FAN sw - ON	
		b. PLSS not available:	
		(1) Doff helmets & gloves	
	ECS	(2) PRESS REG A & B vlvs - CABIN	
		(3) CABIN GAS RETURN vlv - AUTO	
		(4) SUIT GAS DIVERTER vlv - PUSH CABIN	
	11	(5) CB ECS: CABIN FAN - close	
	ECS	(6) PRESS REG A & B vlvs - DIRECT O_2 periodically, to purge cabin of CO_2	MSFN will provide required purge cycle.
		2. Failure when in lift-off configuration - ECS Basic (Staged), except:	Ref para 4.13.1.1.
	ECS	PRESS REG A & B vlvs - CABIN	
		Doff helmets & gloves	
		3. Failure during Ascent -	
		a. Insertion:	
		(1) Doff helmets & gloves	
		(2) If crew activity does not permit helmets & gloves removed, perform following:	
		PRESS REG A - CABIN	
		PRESS REG B - DIRECT O_2	DIRECT O_2 supplies = 7 lb/hr O_2 to suit loop when ASC O_2 tank is full.
		SUIT GAS DIVERTER vlv - PUSH CABIN	
	PGA	VENTILATION DIVERTER vlv - EV (vertical)	
		b. Post-Insertion:	
		(1) Doff helmets & gloves	
	ECS	(2) PRESS REG A & B vlvs - CABIN	
		(3) CABIN GAS RETURN vlv - AUTO	
		(4) SUIT GAS DIVERTER vlv - PUSH CABIN	
	11	(5) CB ECS: CABIN FAN - close	
		(6) PRESS REG A & B vlvs - DIRECT O_2 periodically, to purge cabin of CO_2.	MSFN will provide required purge cycles.

CREW-MAN	PNL	PROCEDURES	REMARKS
		5.4.19 OPTIMIZATION OF APS HELIUM MANIFOLD LEAK	This procedure is used in conjunction with nominal powered ascent procedures if helium manifold leak is detected. MSFN can detect such a leak with telemetry. This procedure utilizes fact that helium is continuously lost only while leak is being supplied with helium. By minimizing time leak is being supplied, amount of helium lost can be minimized.
	1	1. If leak is detected before ignition - As soon as leak is detected: CB PROPUL: ASC He REG - close ASC He REG 1 & 2 sw - CLOSE; tb - bp HELIUM MON sel - PRESS 1 PRPLNT TEMP/PRESS MON sw - ASC If leak is detected after ignition: Omit steps 2 & 3.	
	8	2. If leak is detected before pressurization - Pressurize with one helium bottle at ignition -5 sec: ED: ASC He SEL sw - TANK 1 MASTER ARM sw - ON ASC He PRESS sw - FIRE 3. Immediately at APS ignition: ASC He REG 1 & 2 - OPEN; tb - gray WARNING If during ignition +40 seconds, helium source decay rate is >11 psia/sec (>22 psia/sec for one bottle pressurization), isolate reg SOV that gives lesser decay rate and use it in lieu of both reg SOV's. If neither reg SOV selection decreases leak rate, go to step 4 only.	
		4. At ignition +40 seconds:	Forty seconds will ensure that sufficient ullage volume exists for first blowdown cycle.

CREW-MAN	PNL	PROCEDURES	REMARKS
		5.4.19 OPTIMIZATION OF APS HELIUM MANIFOLD LEAK (cont)	
		ASC He REG 1 & 2 sw - CLOSE; tb - bp	
		If helium source pressure stops decreasing, go to step 5. If helium source pressure continues to decrease, after regs are closed, perform following only.	
		ASC He REG 1 & 2 sw - OPEN; tb - gray	
		If one bottle pressurization -	
	8	When MPS: FUEL or OXID PRESS ind - 110 psia: ED:	
		ASC He SEL sw - TANK 2	
		MASTER ARM sw - ON	
		ASC He PRESS sw - FIRE	
	1	5. When MPS: FUEL or OXID PRESS ind - 110 psia: ASC He REG 1 & 2 sw - OPEN; tb - gray	
		6. When MPS: FUEL or OXID PRESS ind - 170 psia: ASC He REG 1 & 2 sw - CLOSE; tb - bp	
		7. For one bottle pressurization: Continue to cycle between steps 5 & 6.	
	8	When MPS: HELIUM - $\leq$500 psia (PRESS 1): ED:	
		ASC He SEL sw - TANK 2	
		MASTER ARM sw - ON	
		ASC He PRESS sw - FIRE	
		8. For two bottle pressurization: Continue to cycle between steps 5 & 6	After 340 seconds, APS has sufficient blowdown capability if it is fully pressurized, so opening regulators assures final pressurization. Loss of He once tanks are fully pressurized, at this point, does not preclude a safe insertion.
	1	At ignition +340 sec: ASC He REG 1 & 2 sw - OPEN; tb - gray	

LM 3217A

CREW-MAN	PNL	PROCEDURES	REMARKS
		5.4.20 ASCENT STAGE OXYGEN TANK BLEED-DOWN PROCEDURE	
	ECS	1. Verify LM configured - a. Cabin relief and dump vlv (fwd) - AUTO b. SUIT CIRCUIT RELIEF vlv - AUTO c. CABIN GAS RETURN vlv - AUTO d. SUIT GAS DIVERTER vlv - PUSH CABIN e. LO PLSS FILL vlv - CLOSE f. HI PLSS O2 FILL vlv - CLOSE g. Correct O2 hoses R/R and B/B h. Don Helmets and Gloves i. DES O2 vlv - CLOSE j. CABIN REPRESS vlv - CLOSE	Assumption: Bleed-down to be performed if MSFN verifies necessity.
	2	2. O2/H2O QTY MON sel - ASC 1 (2)	Monitor
		NOTE Monitor cabin pressure during procedure and verify 4.6 - 5.8 psia. Cabin relief and dump valve will relieve to maintain cabin pressure at 5.25 - 5.8 psia.	
		3. #1 (2) ASC O2 vlv - OPEN	
	ECS	4. PRESS REG A vlv - DIRECT O2	
	2 ECS	5. When ECS: O2 QUANTITY ind - 95 to 100%: a. #1 (2) ASC O2 vlv - CLOSE b. PRESS REG A vlv - CABIN	
		6. CABIN REPRESS vlv - AUTO	
		7. DES O2 vlv - OPEN	
		8. Doff Helmets and Gloves	
		9. SUIT GAS DIV vlv - PULL EGRESS CABIN GAS RETURN vlv - EGRESS Correct O2 hoses R/B and B/R	
		10. O2/H2O QTY MON sel DES 2	

LM 3218, LM 3227A

CREW-MAN	PNL	PROCEDURES	REMARKS
		5.4.21 ASCENT STAGE OXYGEN TANK TOP-OFF PROCEDURE	Assumptions: 1. Necessity for tank recharge verified by MSFN. 2. DES STAGE O2 TANK pressure sufficient to effect a top-off of a low ASC O2 TANK verified by MSFN.
		To effect a refill ASC O2 TANK #1 (2)	
	ECS	1. Verify #1 & #2 ASC O2 vlv - CLOSE	
	2	2. O2/H2O QTY MON sel - DES 1 O2/H2O QTY MON sel - DES 2	Note quantity of DES 1 O2 Note quantity of DES 2 O2
		3. O2/H2O QTY MON sel - ASC 1 (2)	Monitor O2 quantity
	ECS	4. Verify DES O2 vlv - OPEN	
		5. INTLK OVRD pb - Push and hold	
		6. #1 (2) ASC O2 vlv - OPEN	
		7. #2 (2) ASC O2 vlv - CLOSE	When ECS: O2 QUANTITY ind is 95 - 99 % or ECS: O2 QUANTITY ind stabilizes.
		8. INTLK OVRD pb - Release	
		9. O2/H2O QTY MON sel - DES 2	
		5.4.22 DESCENT O2 VENTING	This procedure is required to vent DESCENT TANK no. 2 prior to performing manual staging while on lunar surface.
		1. Retrieve O2 vent adapter from stowage.	
		2. Cabin relief and dump vlv (fwd & ovhd) - AUTO	
	+Z27	3. HI PLSS O2 FILL vlv - CLOSE	
		4. Disconnect PLSS fill O2 hose from HI PRESS O2 QD.	
		5. Connect O2 vent adapter to HI PRESS O2 QD.	
		6. Connect PLSS fill O2 hose to LO PRESS O2 QD.	

LM 3227A

CREW-MAN	PNL	PROCEDURES	REMARKS
		5.4.22 DESCENT O2 VENTING (cont)	
		7. O2/H2O QTY MON sel - DES 2	Cabin pressure will rise from 5.4 to 5.8 psia before cabin pressure relief valve opens.
	+Z27	8. HI PLSS O2 FILL vlv - OPEN	
	2	9. HI PLSS O2 FILL vlv - CLOSE when directed by MSFN, or immediately after lift - off.	

CREW-MAN	PNL	PROCEDURES	REMARKS
		5.4.23 LOSS OF MANUAL AND AUTO APS START CAPABILITY	Assumption: Vehicle is configured for normal ascent and manual staging has been approved by MSFN.
	5	1. Eng STOP pb/lt - push Eng START pb/lt - off	
	1	ENG THR CONT: ENG ARM sw - OFF ABORT STAGE pb - reset	
	8	ED: Observe STAGE SEQ RELAYS lts ED: MASTER ARM sw - OFF If staged: MASTER ALARM & ED RELAY CAUTION LT - on	If at least one lt has gone off, staging has occurred.
	4	Key V37E00E	
		2. Remove and stow restraints (CDR's to floor fittings)	
	8 ECS	3. If vehicle is unstaged, return to descent consumables: #1 ASC O2 vlv - CLOSE DES O2 vlv - OPEN WATER TANK SELECT vlv - DES ASC H2O vlv - CLOSE DES H2O vlv - OPEN PRESS REG A & PRESS REG B vlvs - CABIN SUIT GAS DIVERTER vlv - PULL EGRESS CABIN GAS RETURN vlv - EGRESS Doff helmets and gloves SUIT ISOL vlvs (2) - SUIT DISC Reverse O2 hoses R/B and B/R PGA DIVERTER vlvs - IV (Horizontal) SUIT ISOL vlvs (2) - SUIT FLOW CABIN REPRESS vlv - AUTO	
	11,16	CB EPS: DES ECA CONT - close DES ECA - close ASC ECA CONT - close	
	14	EPS: DES BAT sw - CONNECT: tb - gray LMP BAT 2 sw - ON; tb - gray CDR BAT 4 HI-V sw - ON; tb - gray LMP BAT 1 HI-V sw - ON; tb - gray CDR BAT 3 sw - ON; tb - gray BAT 5 NORMAL LMP FEED sw - OFF; tb - bp BAT 6 NORMAL CDR FEED sw - OFF; tb - bp	

CREW-MAN	PNL	PROCEDURES	REMARKS
		5.4.23 LOSS OF MANUAL AND AUTO APS START CAPABILITY (cont)	
CDR	11	4. Power down PJ45A: CB RCS SYS A: QUAD 4, 3, 2 and 1 TCA - open CB S/C; ATCA (PGNS) - open AELD - open	
CDR	11	5. Unsnap netting snaps from trevano ceiling aft of docking window at +Z27 bulkhead	
		6. Expose PJ45A above trevano ceiling: a. Cut on line taped from +Z27 bulkhead to docking window b. Cut on line taped from top of PNL11 to docking window c. Bend trevano section down toward PNL11, snap off and discard	
		7. Unstow connector coupling pliers from container aft of engine cover	
		8. Demate PJ45A by rotating connector coupling counter clockwise	Penlights may be used to illuminate work area if required
		9. Unstow LCG's and remove Ascent Engine T-Adapter cable from package.	Stowed below PLSS recharge station
CDR		10. Mate P45X of T-cable to J45 at +Z27 bulkhead using pliers to initiate remating	
CDR		11. Mate J45X of T-cable to P45A	
	14 11,16 ECS	12. If vehicle is unstaged, return to ascent consumables: BAT 5 NORMAL LMP FEED sw - ON; tb - gray BAT 6 NORMAL CDR FEED sw - ON; tb - gray CB EPS: ASC ECA CONT (2) - close DES H2O vlv - CLOSE ASC H2O vlv - OPEN WATER TANK SELECT vlv - ASC DES O2 vlv - CLOSE #1 ASC O2 - OPEN	

CREW-MAN	PNL	PROCEDURES	REMARKS
		5.4.23 LOSS OF MANUAL AND AUTO APS START CAPABILITY (cont)	
		Reverse O2 hoses R/R and B/B	
		Don helmets and gloves	
		PRESS REG A & PRESS REG B vlvs - EGRESS	
		SUIT GAS DIVERTER vlv - PULL EGRESS	
		CABIN GAS RETURN vlv - AUTO	
		SUIT CIRCUIT RELIEF vlv - AUTO	
		CABIN REPRESS vlv - CLOSE	
	14	LMP BAT 1 HI-V sw - OFF/RESET; tb - bp	
		CDR BAT 3 sw - OFF/RESET; tb - bp	
		LMP BAT 2 sw - OFF/RESET; tb - bp	
		CDR BAT 4 HI-V sw - OFF/RESET; tb - bp	
		DES BAT sw - DEADFACE; tb - bp	
		If tb - bp;	
	11,16	CB EPS:	
		DES ECA - open	
		DES ECA CONT - open	
		ASC ECA CONT - open	
		13. Manually stage:	If staging prior to liftoff is not feasable, this step must be performed simultaneously with liftoff.
	11	CB ED: LOGIC PWR A - close	
	16	CB ED: LOGIC PWR B - close	
	8	ED:	
		MASTER ARM sw - ON	
		STAGE sw - FIRE	
		STAGE SEQ RELAYS lts - off	
		14. Prepare for LMP Bus Power Down	
LMP	2	ECS: SUIT FAN sel - 1	
LMP	14	EPS: INVERTER sw - 1	
	12	AUDIO: AUDIO CONT sw - BU	
		COMM:	
		S-BAND XMTR/RCVR sw - SEC	
		S-BAND PWR AMPL sw - SEC	
		S-BAND VOICE sw - DN VOICE BU	
		S-BAND RANGE sw - OFF/RESET	
		VHF A RCVR sw - ON	
		VHF B XMTR sw - VOICE	
		TLM BIOMED sw - OFF	
		COMM ANT: S-BAND sel - FWD or AFT	Reacquire S-BAND
		AUDIO:	
		S-BAND T/R sw - S-BAND T/R	

CREW-MAN	PNL	PROCEDURES	REMARKS
		5.4.23 LOSS OF MANUAL AND AUTO APS START CAPABILITY (cont)	
		ICS T/R sw - ICS T/R MODE sw - ICS/PTT VHF A sw - RCV VHF B sw - T/R	
LMP	16	15. Power down LMP Bus: CB EPS: CROSS TIE BUS - open CROSS TIE BAL LOADS - open BAT FEED TIE (2) - open	
		16. Unstow LCG's and remove ED Adapter Cable (20 ft) from package.	Stowed below PLSS recharge station
LMP	16	17. Remove dust cap from J166	
LMP	16	18. Mate P166/167 (align white stripe) of ED Adapter Cable to J166	
CDR		19. Mate P428 of ED Adapter Cable to J428X of T-cable	
CDR		20. Dress cables clear of PNL11	
LMP	ECS	21. PGA DIVERTER vlvs - IV (Horizontal)	
		22. Prepare PGNS for launch:	
	11	CB AC BUS A: RNDZ RDR - close	
		CB PGNS: RNDZ RDR - close	
	3	RR sel - LGC	
		V41 N72E (+00000, +28300)	
		N12 R2 00002, PRO	
		V16 N72E	
		CB PGNS: RNDZ RDR - open	
	11	CB AC BUS A: RNDZ RDR - open	
		V44E	
		Window shades - deploy	
	11	CB AC BUS A: AOT LAMP - close	
		P57, R2 00004, PRO	
		N34 Load LO Time, PRO	
		N06 00010 00003 00110	

LM 3240A

CREW-MAN	PNL	PROCEDURES	REMARKS
		5.4.23 LOSS OF MANUAL AND AUTO APS START CAPABILITY (cont)	
		PRO (No Att lt - ON/OFF, Twice) N04 Grav Err (.01°) V32E (No Att lt - ON/OFF, Twice) N04 Grav Err (.01°) PRO N22 ICDU Angles (.01°) PRO (No Att lt - ON/OFF) N71 Star, 4 marks N05 Angle Diff (.01°) PRO N93 Torque Angles (.001°) PRO N25 00014, ENTR POOE	
	11	CB AC BUS A: AOT LAMP - open Window shades - stow	
	11	CB AC BUS A: RNDZ RDR - close CB PGNS: RNDZ RDR - close V41 N72E (+17500, +27500) N12 R2 00002, PRO V16 N72E	
	11	CB PGNS: RNDZ RDR - open V44E	
	3	RR mode sw - SLEW P12E N33 : : TIG PRO N76 VH Final (+55408) H Dot Final (+00320) X Rng (+00000) PRO N74 TFI, Yaw, Pitch Det - Set/ON	
		23. Lift Off	
CDR	1	ABORT STAGE pb - push ENG THR CONT: ENG ARM sw - ASC at TFI = 00B05 FL V99 N74 PRO	

CREW-MAN	PNL	PROCEDURES	REMARKS
		5.4.23 LOSS OF MANUAL AND AUTO APS START CAPABILITY (cont)	
		at TFI = 00B00:	
LMP	16	CB EPS: BAT FEED TIE (2) - close	
	16	24. When TG≤1 sec; CB EPS: BAT FEED TIE (2) - open	

CREW-MAN	PNL	PROCEDURES	REMARKS
		5.4.24 LOSS OF MANUAL AND AUTO APS START CAPABILITY (WITH LOSS OF ONE BUS)	Assumption: Manual staging has previously been performed, and vehicle is configured for normal one bus ascent.
	5 1	1. Eng STOP pb/lt - push Eng START pb/lt - off ENG THR CONT: ENG ARM sw - OFF ABORT STAGE pb - reset	
	8	2. ED: Observe STAGE SEQ RELAYS lts ED: MASTER ARM sw - OFF if staged: MASTER ALARM & ED RELAY CAUTION lt - on, If CDR bus is powered up: Key V37E 00E	If at least one lt has gone off, staging has occured
CDR	11	3. Power down PJ45A: CB RCS SYS A: QUAD 4, 3, 2 and 1 TCA - open CB S/C: ATCA (PGNS) - open AELD - open	
CDR	11	4. Unsnap netting snaps from trevano ceiling aft of docking window at +Z27 bulkhead	
		5. Expose PJ45A above trevano ceiling: a. Cut on line taped from +Z27 bulkhead to docking window b. Cut on line taped from top of PNL11 to docking window c. Bend trevano section down toward PNL11, snap off and discard	
		6. Unstow connector coupling pliers from container aft of engine cover	
		7. Demate PJ45A by rotating connector coupling counter clockwise	Penlights may be used to illuminate work area if required
		8. Unstow Ascent Engine T-adapter cable from in-flight coverall garments	Stowed below PLSS recharge station
CDR		9. Mate P45X of T-cable to J45 at +Z27 bulkhead using pliers to initiate remating	

CREW-MAN	PNL	PROCEDURES	REMARKS
		5.4.24 LOSS OF MANUAL AND AUTO APS START CAPABILITY (WITH LOSS OF ONE BUS)(cont)	
		10. Mate J45X of T-cable to P45A	
		11. If CDR bus is powered up: Key V37E 57E	
		12. Prepare PGNS for launch: If CDR bus is powered up: (If LMP bus is powered up, start with step 13)	
CDR	11	CB AC BUS A: RNDZ RDR - close CB PGNS: RNDZ RDR - close	
	3	RR sel - LGC V41 N72E (+00000, +28300) N12 R2 00002, PRO V16 N72E CB PGNS: RNDZ RDR - open	
	11	CB AC BUS A: RNDZ RDR - open V44E Window shades - deploy	
	11	CB AC BUS A: AOT LAMP - close P57, R2 00004, PRO N34 Load LO Time, PRO N06 00010 00003 00110 PRO (No Att lt - ON/OFF, Twice) N04 Grav Err (.01°) V32E (No Att lt - ON/OFF, Twice) N04 Grav Err (.01°) PRO N22 ICDU Angles (.01°) PRO (No Att lt - ON/OFF) N71 Star, 4 marks N05 Angle Diff (.01°) PRO N93 Torque Angles (.001°) PRO N25 00014, ENTR POOE	

CREW-MAN	PNL	PROCEDURES	REMARKS
		5.4.24 LOSS OF MANUAL AND AUTO APS START CAPABILITY (WITH LOSS OF ONE BUS)(cont)	
	11	CB AC BUS A: AOT LAMP - open	
		Window shades - stow	
	11	CB AC BUS A: RNDZ RDR - close	
		CB PGNS: RNDZ RDR - close	
		V41 N72E (+17500, +27500)	
		N12 R2 00002, PRO	
		V16 N72E	
		CB PGNS: RNDZ RDR - open	
	11	CB AC BUS A: RNDZ RDR - open	
		V44E	
	3	RR sel - SLEW	
		P12E	
		N33 : : TIG	
		PRO	
		N76 VH Final (+55408)	
		H Dot Final (+00320)	
		X Rng (+00000)	
		PRO	
		N74 TFI, Yaw, Pitch	
		Det - Set/ON	
		13. Prepare AGS for launch:	
		If LMP bus is powered up:	
		C574+00000E (Unstaged)	
		C604-00000E (On Surface)	
		C400+60000E (AGS calibration)	
		C612R- to Att Hold at Abort Stage	
		C307------ΔT Trans (+04300)	
		373-------TIG TPI (+01496)	
		C451+0ΔVY	
		C400R (+0 calibration complete)	
		C544R-----X	
		C545R-----Y	
		C546R-----Z	
		C400+4E Lunar Align	
CDR		ATTITUDE MON sw - AGS	
		MODE SEL sw - AGS	
		14. Unstow ED Adapter Cable (20 ft) from LCG's in lower left hand mid section	

CREW-MAN	PNL	PROCEDURES	REMARKS
		5.4.24 LOSS OF MANUAL AND AUTO APS START CAPABILITY (WITH LOSS OF ONE BUS)(cont)	
		15. Remove dust cap from J166 (if CDR bus is powered up) or J167 (if LMP bus is powered up)	
		CAUTION At completion of this step, P428 is powered up.	
		16. Mate P166/167 (align white stripe for PNL11 connector or align black and white stripe for PNL16 connector) of ED Adapter Cable to J166 or J167	
		17. Don restraints	
CDR LMP	11	18. Lift Off: If CDR bus is powered up: CB AC BUS A: RNDZ RDR - close FL V99 N74 PRO Brace for LO and mate P428 of ED Adapter Cable to J428X of T-cable If LMP Bus is powered up: C400+1E Guid Steering 367R Brace for LO and mate P428 of ED Adapter Cable to J428X of T-cable	
	16	19. When TG = 1 sec; Demate P428 of ED Adapter Cable from J428X of T-cable	

LM 3240A

CREW-MAN	PNL	PROCEDURES	REMARKS
		5.4.25 LOSS OF ED SUB-SYSTEM	
		1. Perform Subsystems Configuration for EVA preparation	Ref para 4.15.1.8
CDR		2. Perform PLSS/EVCS Electrical Checkout, One-Man EVA	Ref para 4.15.1.10
LMP		3. Connect to LMO2, COMM and H2O Place gas connector plugs in PGA PGA DIVERTER vlv - HORIZONTAL	
LMP	16 16	4. Final Subsystems Configuration for Egress CB ECS:LGS PUMP - Close LGC - Cold, As required CB ECS: CABIN REPRESS vlv - Close (Verify) SUIT FLOW CONT - Open SUIT GAS DIVERTER vlv - PULL EGRESS (Verify) CABIN GAS RETAIN vlv - EGRESS (Verify) SUIT CIRCUIT RELIEF vlv - AUTO (Verify) Reverse O2 hoses, R/R and B/B Don helmets and gloves	
LMP		5. Perform ARS/PGA Pressure Integrity Check	Ref para 4.2.16
		6. Unstow ED Adapter Cable (20 ft) from LCG's in the lower left-hand mid section	
	16	7. Secure P166/167 to the hand hold between PNL's 12 and 14	
		8. Secure scissors and connector coupling pliers via tethers to PGA D-ring and velcro to either side of RCU	
		9. Attach P428 of ED Adapter Cable on PGA glove under velcro cover	
		10. Perform Cabin Depressurization	Ref para 4.13.1.7
		11. Remove the beta body from connector P428	
		12. Exit cabin, descent ladder to surface, stow ED Adapter Cable, and approach parked LRV; or, descend ladder to last rung and navigate across secondary struts to left side of QUAD IV, after cutting MESA support strap - disregard steps 13 through 16	Depends on real-time descision regarding landing attitude

CREW-MAN	PNL	PROCEDURES	REMARKS
		5.4.25 LOSS OF ED SUB-SYSTEM (cont)	
		13. Drive LRV and park adjacent to left hand side of MESA	
		14. At MESA fold back blankets, away from left hand side	Assumption: MESA has previously been unstowed.
		CAUTION Crewman must not stand on verticle members of the SRC support structure.	
		15. Climb onto LRV from left hand seat and then onto left hand side of MESA	
		16. Climb up MESA and stand on inboard area of MESA using the top of QUAD IV as support	
		CAUTION Inconel is very sharp at the edges and can cut into the PGA. Close scissors after use.	
		17. Holding onto the top of QUAD IV with the right hand, tear away at the Inconel and thermal blankets on the left hand side with the scissors, by starting at the 5 inch taped opening in the left hand side of the Inconel blanket, exposing the ED relay box	
		18. Verify access clear of the Inconel blanket to the ED relay box	
		CAUTION The front corner connector must not be demated.	Connector is color coded with brown tape.
		NOTE Connector coupling pliers can be utilized if required	

CREW-MAN	PNL	PROCEDURES	REMARKS
		5.4.25 LOSS OF ED SUB-SYSTEM (cont)	
		19. Demate connectors required for access to the GSE dust cover without demating the front corner connector	
		20. Demate the GSE dust cover	
		21. Remove the ED adapter cable from the PGA glove	
		22. Remove the dust cap from connector P428	
		23. Mate the ED adapter cable to the GSE connector on the ED relay box, by observing alignment marks	
LMP		24. Pull the cable slightly taut	
		25. Climb down from the LM via the MESA (or navigate back across the secondary struts to the ladder)	
		26. Climb up the ladder and enter the cabin	
		27. Power down the LMP bus and hook up the ED adapter cable (20 ft)	Ref para 5.4.23, steps 15, 16, 17, 18, and 19
LMP	16	28. Apply power to the ED adapter cable: CB EPS: BAT FEED TIE (2) - close	
		29. Manually stage CB ED: LOGIC PWR A - close ED: MASTER ARM sw - ON STAGE SEQ RELAYS SYS A lt - on STAGE sw - FIRE STAGE SEQ RELAYS lts - off	
LMP	16	30. CB EPS: BAT FEED TIE (2) - open Demate P166/167 of adapter cable from J166 and jettison CB EPS: BAT FEED TIE (2) - close Close hatch	
		31. Power up LMP bus:	

CREW-MAN	PNL	PROCEDURES	REMARKS
		5.4.25 LOSS OF ED SUB-SYSTEM (cont)	
	ECS	32. Perform Cabin Repressurization with descent O2 if available: PRESS REG A & PRESS REG B vlvs - CLOSE #1 ASC O2 vlv - CLOSE DES O2 vlv - OPEN CABIN REPRESS vlv - MANUAL until Cabin pressure 3.5 psia, then CLOSE CABIN GAS RETURN vlv - AUTO CABIN REPRESS vlv - MANUAL until Cabin pressure 4.6 to 5.0 psia, then CLOSE DES O2 vlv - CLOSE #1 ASC O2 vlv - OPEN PRESS REG A AND PRESS REG B vlvs - EGRESS If DES O2 not available: CB(16) ECS: SUIT FLOW CONTROL - close	EVA crewman perform vacuum change over PLSS to LM Ref para 5.3-5

APPENDIX D

Table D-1. Definitions of Symbols and Abbreviations

Symbol or Abbreviation	Definition
A	
AAP	Abort autopilot
abs	Absolute
ac	Alternating current (a-c, u.m.)
ACA	Attitude controller assembly
AEA	Abort electronics assembly
AEAA	Ascent engine arming assembly
AELD	Ascent engine latching device
AFC	Automatic frequency control
AGC	Automatic gain control
AGS	Abort guidance section
ALSEP	Apollo lunar surface experiment package
ALT	Altitude
amp	Ampere(s)
AMPL	Amplifier
ANT	Antenna
ANUN	Annunciator
AOT	Alignment optical telescope
APS	Ascent propulsion section
ARS	Atmosphere revitalization section
ASA	Abort sensor assembly
ASC	Ascent
ASD	Apollo standard detonator
ASI	Apollo standard initiator
ASSY	Assembly
ATA	Abort timing assembly

Table D-1. Definitions of Symbols and Abbreviations (cont)

Symbol or Abbreviation	Definition
A (cont)	
ATCA	Attitude and translation control assembly
ATM	Altimeter transmitter multiplier
att	Attitude
auto	Automatic
AZEL	Azimuth-elevation unit
B	
bal	Balance
bat	Battery
bd	Band
biomed	Biomedical
bp	Barber pole
Btu	British thermal unit
BU	Backup
C	
caut lt	Caution light
CB	D-C circuit breaker
CB/AC	A-C circuit breaker
CBW	Constant bandwidth
CBX	C-band transponder
CCRD	Computer control and reticle dimmer assembly
CDH	Constant Δ altitude
CDR	Commander
CDU	Coupling data unit
CENTANG	Orbital central angle during transfer
CES	Control electronics section
cktry	Circuitry
CL	Close
CLR	Clear
CMC	Command Module Computer

Table D-1. Definitions of Symbols and Abbreviations (cont)

Symbol or Abbreviation	Definition
C (cont)	
CMP	Command Module Pilot
CMPTR	Computer
Co	CSI iteration error (AGS)
COAS	Crewman optical alignment sight
comm	Communications
comp caut lt	Component caution light
cont	Continuous rotary control
CONT	Control
cos	Cosine
CO2	Carbon dioxide
CPL	Couple
cps	Cycles per second
CRD	Cosmic-ray detector
CRSFD	Crossfeed
CS	Communications Subsystem
CSI	Coelliptic sequence initiation
CSM	Command/Service Module
CSRC	Contingency sample return container
CW	Continuous-wave
C/W	Caution and warning
CWEA	Caution and warning electronics assembly
D	
Da	Alignment error signal (AGS)
D/A	Digital-to-analog
DAP	Digital autopilot
dbm	Decibel with respect to 1 milliwatt
dc	Direct current (d-c, u.m.)
DECA	Descent engine control assembly
decr	Decrease
DEDA	Data entry and display assembly

LM 3231

Table D-1. Definitions of Symbols and Abbreviations (cont)

Symbol or Abbreviation	Definition
D (cont)	
DEMOD	Demodulator
DES	Descent
DET	Detector
DFR	Deadface relay
DID	Display inertial data (discrete)
DIF	Differential
DIG	Predicted change in integrated gravity (AGS)
DISC	Disconnect
DISP	Display
DIST	Distribution
DN	Down
DOI	Descent orbit insertion
DPS	Descent propulsion section
Dr	LM position remainder (AGS)
DRB	Deadface relay box
DSEA	Data storage electronics assembly
DSKY	Display and keyboard
DUA	Digital uplink assembly
DV	Differential velocity
DΔ	Lunar alignment correction (AGS)
E	
E	Elevation angle (angle between active vehicle LOS and local horizontal plane at TIG, measured from direction of flight)
ECA	Electrical control assembly
ECS	Environmental Control Subsystem
ECADR	Erasable complete address
ED	Explosive device
EDS	Explosive Devices Subsystem
EKG	Electrocardiograph
EL	Electroluminescent

LM 3231 Table D-1. Definitions of Symbols and Abbreviations (cont)

Symbol or Abbreviation	Definition
E (cont)	
EMI	Electromagnetic interference
EMU	Extravehicular mobility unit
eng	Engine
ENTR	Enter
EOS	Emergency oxygen system
EPS	Electrical Power Subsystem
ERA	Electronic replaceable assembly
ERCOUNT	Error counter
ERR	Error
ETB	Equipment transfer bag
EV	Extravehicular
EVA	Extravehicular astronaut; extravehicular activity
EVC	Extravehicular communications
EVCS	Extravehicular communications system
EVVA	Extravehicular visor assembly
Ex	X-component of attitude error
Ey	Y-component of attitude error
Ez	Z-component of attitude error
F	
F	Fahrenheit
FCRA	Fecal collection receptacle assembly
FDAI	Flight director attitude indicator
FDBK	Feedback
F/E	Fecal/emesis
FITH	Fire-in-the-hole
FL	Flash
FM	Frequency modulation
F/O	Fuel-to-oxidizer ratio
FOV	Field of view
fps	Foot (feet) per second
ft	Foot (feet)
fwd	Forward

Table D-1. Definitions of Symbols and Abbreviations (cont)

Symbol or Abbreviation	Definition
G	
g	Gravity
GASTA	Gimbal angle sequencing transformation assembly
gc	Gigacycle(s)
GDA	Gimbal drive actuator
GET	Ground elapsed time
GETI	Ground elapsed time of ignition
GMBL	Gimbal
GN&CS	Guidance, Navigation, and Control Subsystem
GOX	Gaseous oxygen
GSE	Ground support equipment
GSOP	Guidance Systems Operations Plan
GUID	Guidance
H	
h	LM altitude
$\dot{h}$	LM altitude rate
H	Altitude of active vehicle
Ha	Apogee altitude
HBR	High bit rate
He	Helium
Hg	Mercury
Hp	Perigee altitude
Hrf	High (+) low (-) angular rate scaling (AGS)
HTR	Heater
HTS	Heat transport section
HV	High voltage
H2O	Water
H/X	Heat exchanger

Table D-1. Definitions of Symbols and Abbreviations (cont)

Symbol or Abbreviation	Definition
I	
IAM	Incidental amplitude modulation
ICDU	Inertial portion of coupling data unit
ICS	Intercommunication system
ID	Identification
IF	Intermediate frequency
IG	Inner gimbal (pitch)
IGA	Inner gimbal angle
IMU	Inertial measurement unit
incr	Increase
ind	Indicator
ind pwr fail lt	Indicator power failure light
ind pwr/sig fail lt	Indicator power/signal failure light
inst	Instrumentation
ISA	Interim stowage assembly
ISS	Inertial subsection
IV	Intravehicular
IVT	Intravehicular transfer
K	
K	Ground elapsed time of AEA clock zero
KALCMANU	Maneuver calculation
kc	Kilocycle(s)
kmc	Kilomegacycle(s)
kpps	Kilopulse(s) per second
L	
lat	Lateral
LBR	Low bit rate
LCA	Liquid cooling assembly
LCG	Liquid-cooled garment
LCRU	Lunar communications relay unit
ldg	Landing
LGC	LM guidance computer

Table D-1. Definitions of Symbols and Abbreviations (cont)

Symbol or Abbreviation	Definition
L (cont)	
LGEC	Lunar geological exploration camera
LH	Left-hand
LHMSSC	Left-hand midsection stowage compartment
LiOH	Lithium hydroxide
LM	Lunar Module
LMP	LM Pilot
LOR	Lunar orbital rendezvous
LOS	Line of sight; loss of signal
LPD	Landing point designator
LR	Landing radar
LRV	Lunar roving vehicle
LSD	Least significant digit
lt	Light
ltg	Lighting
LV	Local vertical; low voltage
LWHS	Lightweight headsets
M	
MAN	Manual
MANF	Manifold
max	Maximum
mc	Megacycle(s)
MESA	Modularized equipment stowage assembly
MET	Mobile equipment transporter
MG	Middle gimbal (roll)
MGA	Middle gimbal angle
MID	Midcourse
min	Minimum
mm	Millimeter(s)
MOD	Modulation
MON	Monitor
MPS	Main Propulsion Subsystem

Table D-1. Definitions of Symbols and Abbreviations (cont)

Symbol or Abbreviation	Definition
M (cont)	
MPX	Multiplexer
MSD	Most significant digit
mrad	Milliradian
msec	Millisecond(s)
MSFN	Manned Space Flight Network
mv	Millivolt(s)
mw	Milliwatts(s)
N	
n	Mean orbital angular rate of LM in transfer orbit (rad/sec)
N	Noun; number of marks
N/A	Not applicable
NB	Navigation base
NC	Normally closed
nm	Nautical mile(s)
NO	Normally open
No.	Number
norm	Normal
NRZ	Nonreturn-to-zero
N2H4	Hydrazine
N2O4	Nitrogen tetroxide
O	
OCP	Operational checkout procedure
OG	Outer gimbal (yaw)
OGA	Outer gimbal angle
OI	Orbit insertion
OPR	Operate
OPR ERR	Operator error
OPS	Oxygen purge system
ORDEAL	Orbital rate display - earth and lunar
OSC	Oscillator

Table D-1. Definitions of Symbols and Abbreviations (cont)

Symbol or Abbreviation	Definition
O (cont)	
OSCPCS	Oxygen supply and cabin pressure control section
OSS	Optical subsection
OVBD	Overboard
ovhd	Overhead
OVRD	Override
OXID	Oxidizer
O2	Oxygen
P	
P	Semilatus rectum (semiparameter) of LM transfer orbit (ft)
p	Previous value of p in the iteration (ft)
PA	Power amplifier
PAM	Pulse amplitude modulation
para	Paragraph
pb	Pushbutton switch (except pushbutton/light)
pb/lt	Pushbutton/light
PBW	Proportional bandwidth
PCA	Program coupler assembly
PCM	Pulse code modulation
PCMTEA	Pulse-code-modulation and timing electronics assembly
PDA	Power distribution assembly
PGA	Pressure garment assembly
PGNCS	Primary guidance, navigation, and control section
PGNS	Primary guidance and navigation section
Pi or π	3.1416
PIPA	Pulse integrating pendulous accelerometer
PLSS	Portable life support system
PM	Phase modulation
PMP	Premodulation processor
Poss	Possible
p-p	Peak-to-peak

Table D-1. Definitions of Symbols and Abbreviations (cont)

Symbol or Abbreviation	Definition
P (cont)	
ppm	Pulse(s) per minute
pps	Pulse(s) per second
PQGS	Propellant quantity gaging system
PQMD	Propellant quantity measuring device
PRE	Program reader electronics
press	Pressure
PRF	Pulse repetition frequency
PRIM	Primary
PRM	Pulse ratio modulator
PRN	Pseudorandom noise
prplnt	Propellant
PS	Power supply
PSA	Power and servo assembly
psi	Pound(s) per square inch
psia	Pound(s) per square inch absolute
psid	Pound(s) per square inch differential
PSK	Phase-shift keyed
PT	Pressure transducer
PTA	Pulse torque assembly
PTT	Push-to-talk
PVT	Pressure-volume-temperature
pwr	Power
Q	
q	Perifocus (AGS)
qlD	Perifocus altitude of predicted LM trajectory (TPI only)
qa	Apofocus altitude of LM trajectory (AGS)
QI	Quantity indicator
qLT	Perifocus altitude of LM trajectory (AGS)

LM 3231

Table D-1. Definitions of Symbols and Abbreviations (cont)

Symbol or Abbreviation	Definition
Q (cont)	
qty	Quantity
quad	Quadrant
R	
r	LM range rate
R	Rankine; radius vector; LM-to-CSM range (AGS)
$\dot{R}$	Range rate between LM and CSM (AGS)
RC	Resistance-capacitance
R/C	Reverse current
RCCA	Rough combustion cutoff assembly
RCR	Reverse-current relay
RCS	Reaction Control Subsystem
rcvr	Receiver
RCU	Remote control unit
rcx	X-component of CSM position (AGS)
rcy	Y-component of CSM position (AGS)
rcz	Z-component of CSM position (AGS)
RD	Relay driver; desired radial jerk (AGS)
RDR	Radar
Ref	Reference
REFSMMAT	Reference stable member matrix
reg	Regulator
RES	Resolver
RF	Radio frequency
rf	Predicted orbit insertion burnout radius (AGS)
$\dot{r}f$	Desired final value of altitude rate (AGS)
RGA	Rate gyro assembly
RH	Right-hand
RHSC	Right-hand side console
RJB	Relay junction box
rms	Root mean square

LM 3231

Table D-1. Definitions of Symbols and Abbreviations (cont)

Symbol or Abbreviation	Definition
R (cont)	
RNDZ	Rendezvous
RNG	Range
ROD	Rate of descent
RR	Rendezvous radar; estimated range between LM and CSM (AG
$\dot{R}R$	Estimated range rate between LM and CSM (AGS)
RRE	Rendezvous radar electronics
RRS	Calculated range at time of radar range measurement
RT	Resistance thermometer
rx	X-component of LM position (AGS)
ry	Y-component of LM position (AGS)
rz	Z-component of LM position (AGS)
RZ	Return-to-zero
S	
SBPA	S-band power amplifier
SBX	S-band transponder
SC	Signal conditioner
S/C	Stabilization and control
SCEA	Signal-conditioning electronics assembly
S ΔE	Term proportional to sine of ΔE
SE	Systems Engineer
sec	Second(s); secondary
sel	Selector
SENS	Sensitivity
SEP	Separator
SEQ	Sequence; scientific equipment
SHe	Supercritical helium
SG	Signal generator
SHFT	Shaft
SIG	Signal

LM 3231 Table D-1. Definitions of Symbols and Abbreviations (cont)

Symbol or Abbreviation	Definition
S (cont)	
sin	Sine
SOV	Shutoff valve
SPA	Signal processor assembly
STBY	Standby
SUBCAR	Subcarrier
SUPCRIT	Supercritical
sw	Switch
SWC	Solar wind composition (experiment)
sys	System
T	
t	AGS computer time (AGS)
T	Time
T (Align)	State vector time (GET) selected to define IMU and LM orientation
TAI	Absolute time (AGS)
TAo	Time from CSI to CDH (AGS)
tb	Talkback
TBD	To be determined
TCA	Thrust chamber assembly
tco	Predicted time from CDH to TPI (AGS)
TCP	Thrust chamber pressure
TΔ	Time to CDH, CSI, or TPI
TΔV	Target ΔV (AGS)
TE	Timing electronics equipment
temp	Temperature
TET	State vector integration time
TFC	Time from engine cutoff
TFF	Time of free fall to 300,000 ft, earth orbit; 35,000 ft, lunar orbit
TFI	Time from TIG

Table D-1. Definitions of Symbols and Abbreviations (cont)

Symbol or Abbreviations	Definition
T (cont)	
TF INT	Time from intercept
TG	Time-to-go to engine cutoff
THR	Thrust
Ti	Time to CSI (AGS)
TIG	Time of ignition
tigA	AGS computer time of CSI maneuver (AGS)
tigB	Absolute time of CDH maneuver (AGS)
tigC	AGS computer time of TPI or midcourse maneuver (AGS)
TLE	Tracking light electronics
TLM	Telemetry
TPF	Transfer phase final maneuver
TPI	Transfer phase initiation
TPM	Transfer phase midcourse
Tr	Time to rendezvous (AGS)
TR	Redesignation time remaining (PGNS)
T/R	Transmitter/receiver
TRANSL	Translation
TRUN	Trunnion
TTCA	Thrust/translation controller assembly
TTI	Time to initiate
TTIG	Time to ignition
TV	Television
TVC	Thrust vector control
tw	Thumbwheel
TX	Telemetry transmitter
U	
U	LM rotational axis in Y-Z plane 45° from +Z
UCTA	Urine collection and transfer assembly

LM 3231 Table D-1. Definitions of Symbols and Abbreviations (cont)

Symbol or Abbreviation	Definition
U (cont)	
UDMH	Unsymmetrical dimethylhydrazine
UHF	Ultrahigh frequency
URS	Urine receptacle system
usec	Microsecond(s)
V	
V	Verb; inertial velocity vector at TIG; LM velocity; LM rotational axis in Y-Z plane 315° from +Z
vac	Volts, alternating current
VCO	Voltage-controlled oscillator
Vcx	X-component of CSM velocity (AGS)
Vcy	Y-component of CSM velocity (AGS)
Vcz	Z-component of CSM velocity (AGS)
vdc	Volts, direct current
VDX	ΔV expended in X-body-axis direction minus descent engine capability
VDY	ΔV expended in Y-body-axis direction
VDZ	ΔV expended in Z-body-axis direction
VEL	Velocity
VG	Magnitude of velocity vector required by LM for transfer orbit injection (fps); magnitude of LM velocity to be gained
VGX (LM)	Component of VG vector resolved along present X-axis
VGX (LV)	Component of VG vector at TIG along (RxV)xR
VGY (LM)	Component of VG vector resolved along present Y-axis
VGY (LV)	Component of VG vector at TIG along VxR
VGZ (LM)	Component of VG vector resolved along present Z-axis
VGZ (LV)	Component of VG vector at TIG along -R
Vhw	Horizontal velocity (AGS)
VHF	Very high frequency
VI	Inertial velocity
vlv	Valve
Vo	ΔV for CSI maneuver (AGS)

Table D-1. Definitions of Symbols and Abbreviations (cont)

Symbol or Abbreviation	Definition
V (cont)	
vol	Volume
VOX	Voice-operated relay
VPI	Valve position indicator
vpo	CDH maneuver ΔV (AGS)
Vpy	Velocity perpendicular to CSM orbit (AGS)
vrms	Volts root mean square
VSm	Velocity to be gained during burn (AGS)
VT	Total velocity required to rendezvous (direct interception only)
Vx	Velocity along X-axis; altitude rate
Vy	Lateral velocity; velocity along Y-axis
Vyo	LM velocity normal to CSM orbit plane (AGS)
Vz	Forward velocity; velocity along Z-axis
W	
warn lt	Warning light
Wbx	X-unit vector for commanding attitude (AGS)
Wby	Y-unit vector for commanding attitude (AGS)
Wbz	Z-unit vector for commanding attitude (AGS)
Wcx	X-unit vector normal to CSM orbit (AGS)
Wcy	Y-unit vector normal to CSM orbit (AGS)
Wcz	Z-unit vector normal to CSM orbit (AGS)
X	
X	LM vertical axis
XDV	External ΔV
xmtr	Transmitter
xpndr	Transponder
XTAL	Crystal
Y	
Y	LM lateral axis; LM out-of-plane position (AGS)
Ycx	X-component of CSM position (AGS)

Table D-1. Definitions of Symbols and Abbreviations (cont)

Symbol or Abbreviation	Definition
Y (cont)	
Ycy	Y-component of CSM position (AGS)
Ycz	Z-component of CSM position (AGS)
YD	Desired out-of-plane jerk
yf	Predicted value of out-of-CSM-orbit plane position (AGS)
Yx	X-component of LM position (AGS)
Yy	Y-component of LM position (AGS)
Yz	Z-component of LM position (AGS)
Z	
Z	LM fore-aft axis
Δ	
δL	Landing azimuth angle (AGS)
ΔE	Difference between initial and final eccentric anomalies of transfer orbit (rad)
Δh	Altitude differential
ΔH	Altitude between active and passive vehicle after CDH (AGS)
Δp	Change in p for next iteration (AGS)
ΔP	Pressure differential
ΔR	Magnitude of difference between position state vector before and after incorporation of mark data
Δro	Differential altitude in coelliptic orbit (AGS)
ΔT	Time differential
ΔTRANS	Time required for transfer from TIG (TPI) to time of intercept
ΔV	Velocity change (differential); magnitude of difference between state vector before and after incorporation of mark data
ΔV (CDH)	Required impulsive ΔV to accomplish CDH maneuver at TIG (CDH)
ΔV (CSI)	Required impulsive ΔV to accomplish CSI maneuver at TIG (CSI)
ΔVgx	ΔV in X-direction (AGS)
ΔVgy	ΔV in Y-direction (AGS)

Table D-1. Definitions of Symbols and Abbreviations (cont)

Symbol or Abbreviation	Definition
Δ (cont)	
ΔVgz	ΔV in Z-direction (AGS)
ΔVm	Measured ΔV magnitude
ΔV (MID)	Required impulsive ΔV to accomplish next midcourse maneuver at TIG (MID)
ΔV (TPF)	Required impulsive ΔV to accomplish intercept (TPF) maneuver at calculated time of intercept
ΔV (TPI)	Required impulsive ΔV to accomplish TPI maneuver at TIG (TPI)
ΔVy	External ΔV component in horizontal direction perpendicular to CSM orbit plane (AGS)
ΔVX (LM)	Component of integrated acceleration along LM +X-axis
ΔVX (LV)	Component of ΔV applied at TIG along (RxV)xR
ΔVY (LM)	Component of integrated acceleration along LM +Y-axis
ΔVY (LV)	Component of ΔV applied at TIG along VxR
ΔVZ (LM)	Component of integrated acceleration along LM +Z-axis
ΔVZ (LV)	Component of ΔV applied at TIG along -R
Δθ	Angular difference between RR indicated LOS and state vector LOS
∡	Angle
α	Semimajor axis of transfer orbit (AGS)
∅	Phase
∞	Infinity
≤	Less than or equal to
≥	Greater than or equal to
<	Is less than
>	Is greater than
θ	Angle between LM +Z-axis and local horizontal plane (pitch)
θf	LM-to-CSM phase angle
θLOS	Predicted LOS angle at TPI time (AGS TPI only)
ξ	Angle between LM +Z-axis and local horizontal plane (AGS)
∅	Yaw
ψ	Roll; angle between LOS and forward direction
Ω	Angle between RR LOS and LM +Z-axis

APPENDIX E

Controls and Displays

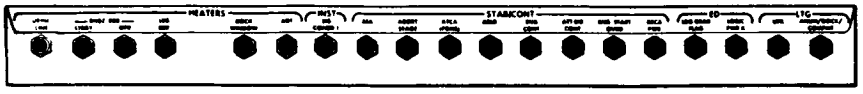

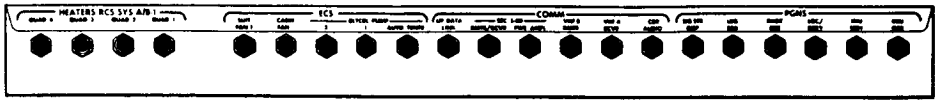

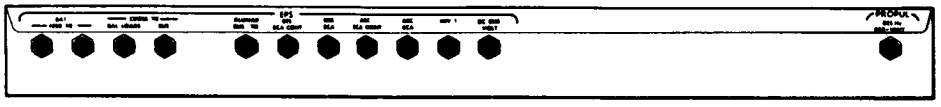

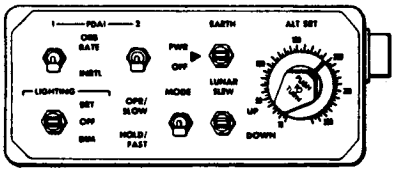

ORDEAL

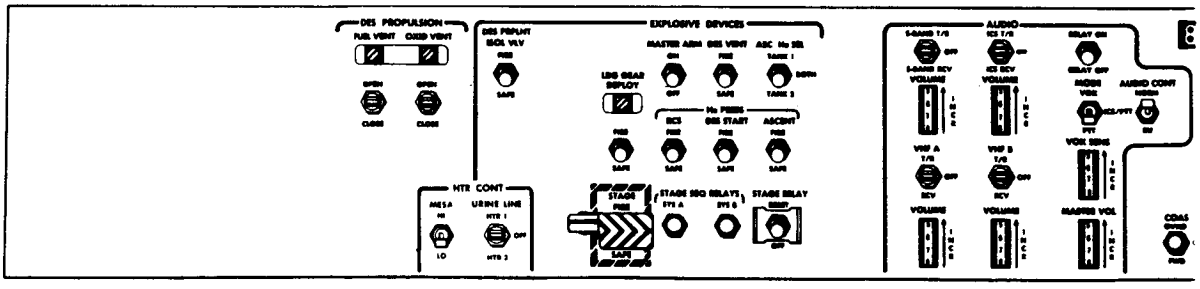

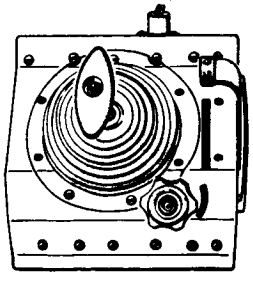

Thrust/Translation Controller Assembly (TTCA)

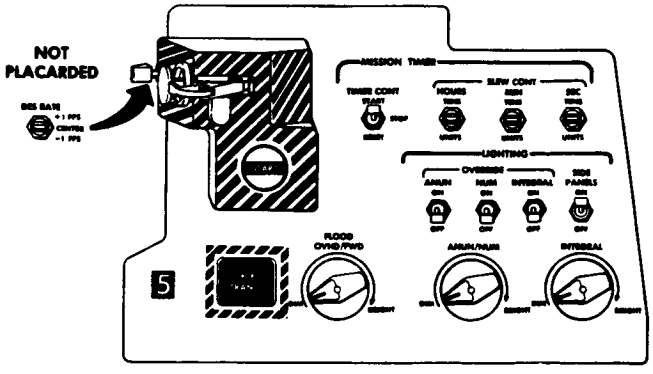

E-3/E-4-A

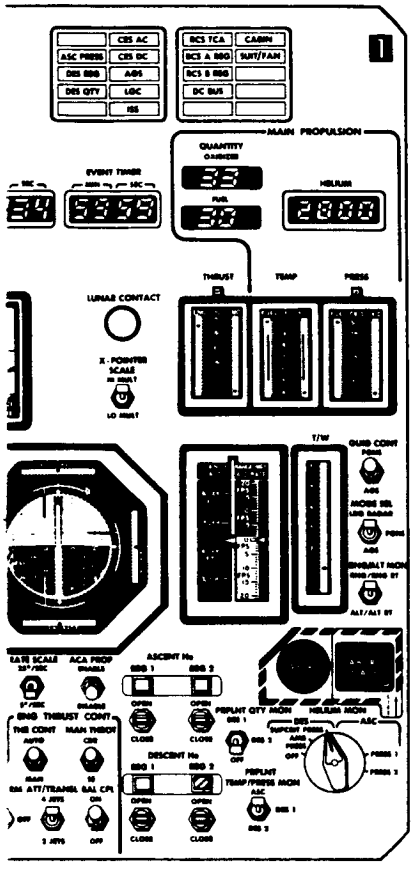

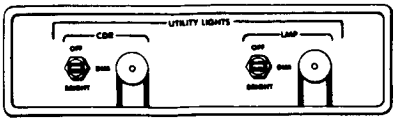

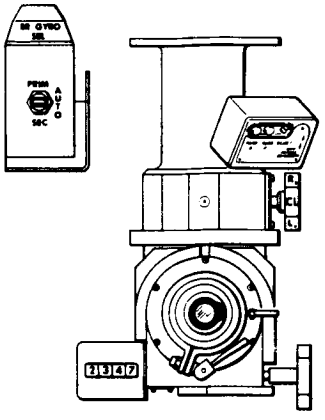

Alignment Optical Telescope (AOT)

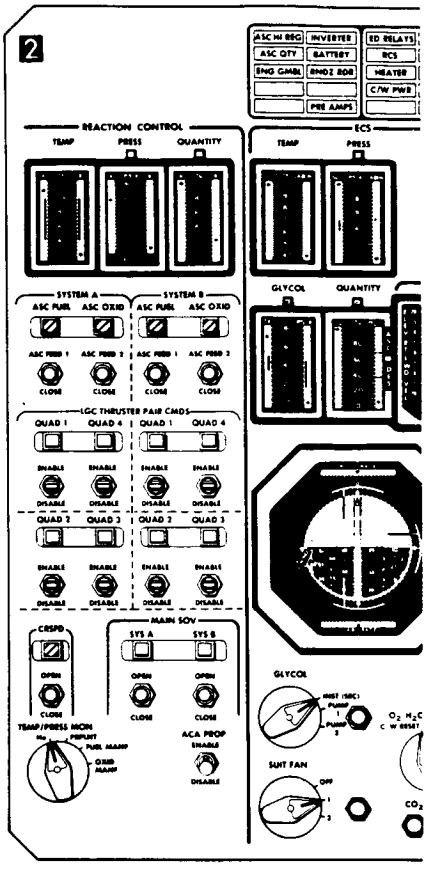

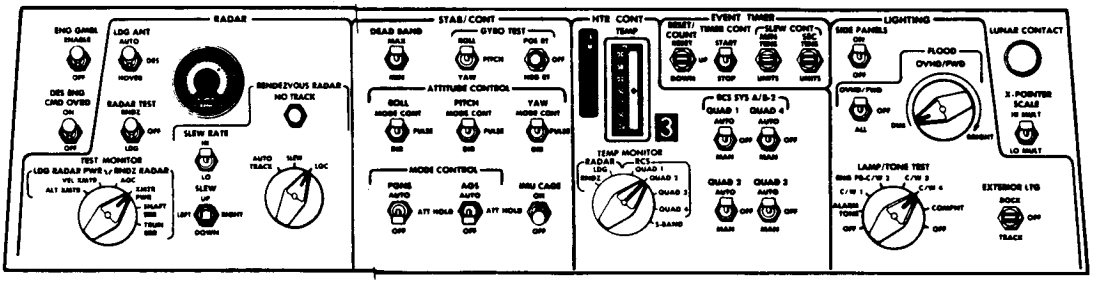

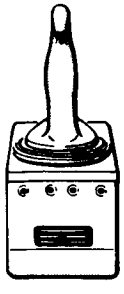

Attitude Controller Assembly (ACA)

DECALS

PRIO DISP

NO DAP

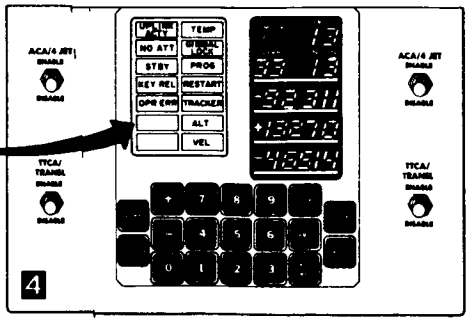

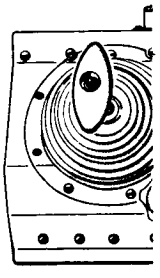

Thrust/Translation Controll

E-3/E-4-B

Basic Date 26 Septe

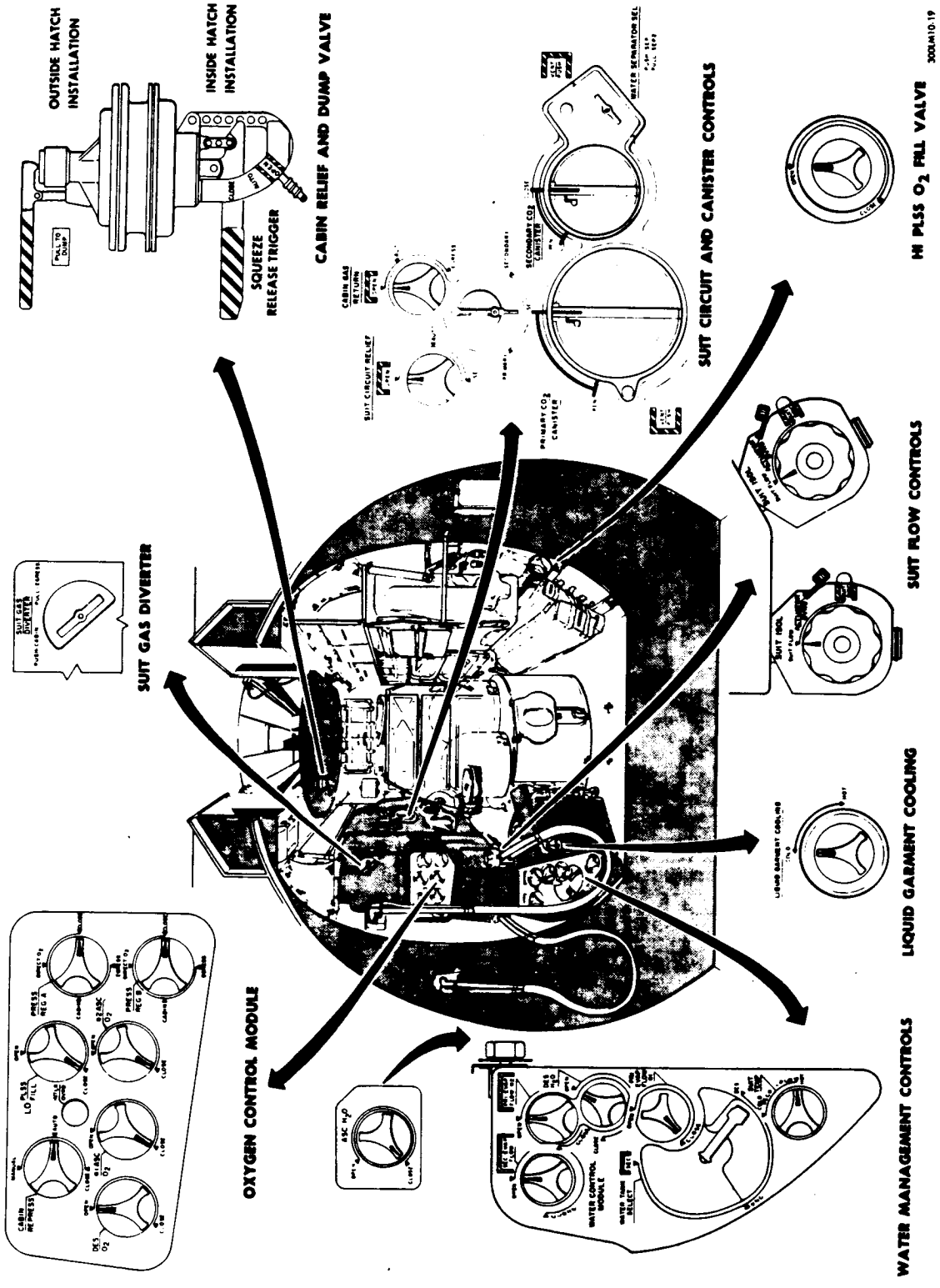

Figure E-2. ECS Aft Bulkhead Controls

APPENDIX F

ALPHABETICAL INDEX

A

	Page
Abbreviations, Definitions of Symbols and	D-1
Abort Procedures	5.1-1
APS Abort (LGC P71, AEA 410+00000)	4.10-116
ACA Hardover	4.5-14
Activation, Subsystem	4.2-2
AGS	
AEA/DEDA Restrictions	4.4-5
AEA Readiness Check	4.6-55
AEA Self-Test	4.6-45
AGS Accelerometer Calibration	4.6-58
AGS (Alignment)	4.9-17
AGS Alignment, Backup (Using AGS Body-Axis Alignment & AOT)	4.9-20
AGS Alignment, Backup (Using AGS Body-Axis Alignment & PGNS IMU)	4.9-19
AGS Attitude Error Display	4.5-34
AGS Attitude Hold/Rate Command	4.5-8
AGS Automatic	4.5-6
AGS Automatic Rendezvous Radar LM State Vector Update (Raw Data Transfer Via LGC)	4.8-22
AGS/CES	4.6-42A
AGS Checkout	4.6-46
AGS Contingency LM Lunar Touchdown State Vector, Load	4.6-51
AGS Direct	4.5-12
AGS FITH	4.12-14
AGS Gyro & Accelerometer Calibration	4.6-46
AGS Initialization Routine (R47)	4.6-23
AGS Lunar Align (400+40000)	4.9-29
AGS Lunar Azimuth Store	4.6-61
AGS Lunar Surface Gyro Calibration	4.6-60
AGS Manual Absolute Time Initialization	4.6-49
AGS Manual CSM State Vector Update/Initialization	4.6-52
AGS Manual LM State Vector Update/Initialization	4.6-50
AGS Orbit Insertion	4.7-36
AGS Orbital Steering	4.6-53
AGS Orientation to Initial Computed Steering Attitude,	4.6-56
AGS Out-of-Plane Maneuver	4.7-34A
AGS Partial Power-Down	4.6-63
AGS Power-Down	4.6-42A
AGS Power-Up	4.6-43
AGS Power-Up From AGS Partial Power-Down	4.6-63
AGS (Prethrust)	4.7-34A
AGS Pulse	4.5-10
AGS RCS Axis-by-Axis Thrust	4.10-51
AGS Rescaling From Lunar to Earth Mission	4.6-61
AGS Selector Logic	4.4-49
AGS Total Attitude Display	4.5-33
AGS warn lt (malfunction procedure)	5.2-14
AGS Wb Vector Update	4.6-59
DEDA response abnormal (malfunctions procedure)	5.2-14
PGNCS/AGS Align	4.9-17
Rate Gyro Check	4.6-54
Alarm Codes (V05 N09)	4.4-29
Alignment	4.9-2
AGS	4.9-17
AGS Lunar Align (400+40000)	4.9-29
Backup AGS Alignment (Using AGS Body-Axis Alignment & AOT)	4.9-20
Backup AGS Alignment (Using AGS Body-Axis Alignment & PGNS IMU)	4.9-19
Docked Manual IMU Coarse Alignment	4.9-16
IMU Orientation Determination Program (P51)	4.9-2
IMU Realign Program (P52)	4.9-5
ISS Coarse Align	4.9-14
Lunar Surface Alignment	4.9-22

Page

PGNCS 4.9-2
PGNCS/AGS Align 4.9-17
PGNCS Lunar Surface Align Program (P57) 4.9-22
Torque Gyros 4.9-15
ALSEP
ALSEP Operations 4.15-37
Open Scientific Equipment (SEQ) Bay 4.15-37
Pallet Assembly Remote Deployment 4.15-38
Pallet Assembly Manual Deployment 4.15-39
Pallet Assembly Manual Deployment in Low Attitude 4.15-40
Removal of RTG Fuel Element 4.15-41
Altitude/Altitude Rate Display 4.5-37
AOT Detent/LPD/COAS Codes (N70, N71) 4.4-32
AOT Lighting Check 4.2-17
Approach Phase Program (P64) 4.10-86
APS
APS Abort (LGC P71, AEA 410+00000) 4.10-116
APS Periodic Monitoring 4.13-31
APS Pressurization & Checkout 4.12-3
APS Pressurization & Checkout (Alternate) 4.12-4
APS/RCS Propellant Interconnect 4.13-29
APS Temp/Press Prepressurization Check 4.2-48
APS Thrust Program (P42) With AGS Followup/In Control 4.10-22
Ascent Engine On/Off Control 4.5-19
ASC He REG 1 (2) tb-bp (malfunction procedure) 5.2-29
ASC HI REG caut lt (malfunction procedure) 5.2-29
ASC PRESS warn lt (malfunction procedure) 5.2-28
ASC QTY caut lt (malfunction procedure) 5.2-29
Fuel or oxid press abnormal (malfunction procedure) 5.2-29
Fuel or oxid temp abnormal (malfunction procedure) 5.2-29
He press abnormal or decr (malfunction procedure) 5.2-29
ARS/Cabin Atmosphere, Contaminants In 5.3-8
ARS/PGA Pressure Integrity Check 4.2-29
ARS Purge (EVA Preparation) 4.15-14
Ascent Battery Activation & Checkout 4.2-45
Ascent Stage Oxygen Tank Bleed-Down Procedure 5.4-24A
Ascent Stage Oxygen Tank Top-Off Procedure 5.4-24B
Attitude Control Modes 4.5-2
Attitude Error Display, Mode I 4.6-38
Attitude Error Display, Mode II 4.6-38
Attitude Rate Display 4.5-34

B

Braking Phase Program (P63) With AGS Preparation for Orbit Insertion (410+00000) . 4.10-73

C

Cabin Atmosphere Filtering 4.13-17
Cabin Depressurization 4.13-11
Cabin Leak Check 4.13-14
Cabin Leak, Excessive 5.3-2
Cabin Operations 4.15-2
Cabin Repressurization 4.13-13
Cabin Repressurization System, Disable LM 4.14-6
Cabin Repressurization System, Enable LM 4.14-5
Calibration
AGS Accelerometer Calibration 4.6-58
AGS Gyro & Accelerometer Calibration 4.6-46
AGS Lunar Surface Gyro Calibration 4.6-60
Camera Wedge, Installation of 16-MM Sequence 4.13-50
Caution & Warning Array Checkout 4.2-19

ALPHABETICAL INDEX (cont)

Page

CES
Abnormal dynamics during MPS thrusting (malfunction procedure) 5.2-19
Abnormal vehicle dynamics (non-MPS) (malfunction procedure) 5.2-16
AGS pulse or direct cmds abnormal (malfunction procedure) 5.2-18
CES AC warn lt (malfunction procedure) 5.2-22
CES DC warn lt (malfunction procedure) 5.2-22
ENG GMBL caut lt (malfunction procedure) 5.2-20
ENG THRUST & CMD THRUST ind do not agree/off schedule (malfunction procedure) . 5.2-21
LM drifts out of deadband (malfunction procedure) 5.2-17
No MPS ignition at TIG = 0 (malfunction procedure) 5.2-21
No MPS shutdown (malfunction procedure) 5.2-20
PGNS minimum impulse (V76) cmds abnormal (malfunction procedure) 5.2-17
PRE AMPS caut lt (malfunction procedure) 5.2-22
Premature MPS ignition (malfunction procedure) 5.2-20
Prop cmds abnormal (malfunction procedure) 5.2-18
TTCA cmds abnormal (malfunction procedure) 5.2-19
Checklist Reference Codes (V50 N25) 4.4-28
Circuit Breaker Activation 4.2-10
COAS Lighting Check 4.2-18
Coelliptic Sequence Initiation (LGC P32, AEA 410+10000) 4.7-7
Communications
Cannot acquire phaselock (malfunction procedure) 5.2-46
Communications Basic 4.13-17
Communications (Subsystem Management) 4.13-17
Connect to LM ECS & Communications 4.14-6
Disconnect From LM ECS & Communications 4.14-8
DSEA Check 4.13-23
DUA Backup Voice Disable 4.13-26
DUA Backup Voice Enable 4.13-26
DUA Disable 4.13-25
DUA Enable 4.13-25
Loss of ICS (malfunction procedure) 5.2-44
Loss of S-band voice comm (malfunction procedure) 5.2-45
Loss of VHF voice comm with CSM (malfunction procedure) 5.2-44
Loss of voice comm with EVA (one man EVA) (malfunction procedure) 5.2-47
Low-Power S-Band Backup Voice, LBR Check With Steerable Antenna 4.2-40
MSFN reports loss of PCM. S-band voice OK. (malfunction procedure) 5.2-46
One crewman has abnormal (unselected) hot mike (malfunction procedure) 5.2-44
Relay Mode: CSM Voice to MSFN 4.13-22
Relay Mode: EVA (One-Man EVA) 4.13-21
Relay Mode: EVA (Two-Man EVA) 4.13-20
S-Band Antenna Cooldown 4.13-26
S-Band Configuration for LOS 4.13-19
S-Band CWEA Enable 4.13-23
S-Band LBR Data Enable 4.13-23
S-Band Operation in PTC Mode 4.13-26
S BD RCVR caut lt (malfunction procedure) 5.2-46
VHF Ranging Check 4.13-24
VHF B Data Enable 4.13-23
Connect to LM ECS, Crewman 4.2-28
Connect to LM ECS & Communications 4.14-6
Constant Δ Altitude (LGC P33, AEA 410+20000) 4.7-14
Consumables Check 4.2-21
Controls and Displays E-1
Coolant Loop (HTS) Activation, Secondary 4.13-8
Cooling H20 Changeover, LM H20 (LCG) to PLSS H20 . . . . . 4.15-28
Cooling H20 Changeover, PLSS H20 to LM H20 (LCG) 4.15-28
Crash Bar Deployment 4.13-51
Crash Bar, Stow 4.13-51
Crash Bar, Unstow 4.13-51
Crew-Defined Maneuver Routine (R62) 4.6-11
Crewman Connect to LM ECS 4.2-28
Crewman Disconnect Transfer Umbilical 4.2-28A
CSM Backup 4.7-38

ALPHABETICAL INDEX (cont)

Page

CSM Coelliptic Sequence Initiation Targeting Program (P72) 4.7-38
CSM Constant Δ Altitude Targeting Program (P73) 4.7-41
CSM Transfer Phase Initiation Targeting Program (P74) 4.7-43
CSM Transfer Phase Midcourse Targeting Program (P75) 4.7-46
CSM Transfer to LM Power (Unstaged) 4.3-27
CSM Transfer to LM Power (Staged - Lifeboat) 4.3-28

D

DAP Data Load Routine (R03) 4.6-8
Deactivation, Final Subsystem 4.3-12
Deactivation, Subsystem 4.3-2
DEDA Accessible Parameters List 4.4-57
DEDA Input List 4.4-51
DEDA Output List 4.4-54
Defecation Disposal (Alternative Mode) 4.13-49
Defecation Disposal (Prime Mode) 4.13-48
Descent Engine On/Off Control 4.5-14
Descent Engine Throttle Control 4.5-22
Descent O_2 Venting 5.4-24B
Disconnect From LM ECS & Communications 4.14-8
Displays, Controls and E-1
Docking, LM 4.11-6
DPS
  Descent Engine On/Off Control 4.5-15
  Descent Engine Throttle Control 4.5-22
  DES He REG 1 (2) tb - bp (malfunction procedure) 5.2-25
  DES He REG 2 (1) tb - gray (malfunction procedure) 5.2-25
  DES QTY warn lt (malfunction procedure) 5.2-26
  DES REG warn lt (malfunction procedure) 5.2-24
  DPS Abort (LGC P70, AEA 410+00000) 4.10-106
  DPS Periodic Monitoring 4.13-30
  DPS Pressurization & Checkout 4.2-50
  DPS Propellant Tank Venting 4.12-2
  DPS Supercritical He Venting (Lunar Surface Only) 4.12-2A
  DPS Temp/Press Prepressurization Check 4.2-49
  DPS Thrust Program (P40) With AGS Followup, Docked 4.10-61
  DPS Thrust Program (P40) With AGS Followup/In Control 4.10-2
  Fuel/oxid press abnormal (malfunction procedure) 5.2-24
  Fuel/oxid temp abnormal (malfunction procedure) 5.2-25
  FUEL VENT/OXID VENT tb - abnormal (malfunction procedure) 5.2-26
  He press abnormal (malfunction procedure) 5.2-25
  Loss of Descent Power 5.3-11
  PQGS ind abnormal (malfunction procedure) 5.2-26
Drogue (CSM Side), Install 4.14-11
Drogue (CSM Side), Remove 4.14-12
Drogue (LM Side), Install 4.14-10
Drogue (LM Side), Remove 4.14-11
DSEA Check 4.13-23
DSKY Light Test 4.6-19
DUA Backup Voice Disable 4.13-26
DUA Backup Voice Enable 4.13-26
DUA Disable 4.13-25
DUA Enable 4.13-25
Dynamic Display Modes 4.5-30

E

ED
  ED Prestaging Check 4.12-8
  ED RELAYS caut lt (malfunction procedure) 5.2-58
  STAGE SEQ RELAYS SYS A & B lts - off when MASTER ARM - ON (malfunction procedure) 5.2-58
  STAGE SEQ RELAY SYS A or B lt - off when MASTER ARM - ON (malfunction procedure) 5.2-59

ALPHABETICAL INDEX (cont)

Page

Emergency Procedures 5.3-2
Contaminants In ARS/Cabin Atmosphere 5.3-8
Emergency Forward Hatch Opening (Cabin Side) 5.3-8
Emergency Transfer, Using OPS 5.3-7
EPS Prestaging Check - Lunar Contingency (One Ascent Battery Only) 5.3-10
Excessive Cabin Leak 5.3-2
Extravehicular Transfer (Staged Vehicle) 5.3-15
Final Subsystem Preparation for EVT 5.3-16
Fire/Smoke in Cabin (Not in Suit Loop) 5.3-3
Fire/Smoke in Suit Loop 5.3-3
Loss of CDR Bus During Powered Descent 5.3-11
Abort (DPS Engine), To 5.3-11
Abort (APS Engine), To 5.3-12
Reconfigure 5.3-13
Loss of Descent Power 5.3-11
Loss of ED Sub-system 5.4-35
Loss of LMP Bus During Powered Descent 5.3-13
Abort (DPS Engine), To 5.3-13
Abort (APS Engine), To 5.3-14
Reconfigure 5.3-14
Loss of Manual and Auto APS Start Capability 5.4-25
Loss of Manual and Auto APS Start Capability (with loss of one bus) . . . 5.4-31
Smoke in Cabin (Crew Unsuited) 5.3-9
Subsystem Preparation for Egress 5.3-15
Suit Leak in Depressurized Cabin 5.3-4
Vacuum Changeover - PLSS to LM 5.3-5
Vacuum Transfer to CSM, Crewman 5.3-6

ECS

ARS/Cabin Atmosphere, Contaminants In 5.3-8
ARS/PGA Pressure Integrity Check 4.2-29
Cabin Atmosphere Filtering 4.13-17
Cabin Depressurization 4.13-11
Cabin Leak Check 4.13-14
Cabin Leak, Excessive 5.3-2
CABIN PRESS - high (malfunction procedure) 5.2-51
CABIN PRESS - low or decr (malfunction procedure) 5.2-50
Cabin Repressurization 4.13-13
Cabin Repressurization System, Disable LM 4.14-6
Cabin Repressurization System, Enable LM 4.14-5
CABIN warn lt (malfunction procedure) 5.2-50
Connect to LM ECS, Crewman 4.2-28
Connect to LM ECS & Communications 4.14-6
Consumables Check 4.2-21
Coolant Loop (HTS) Activation, Secondary 4.13-8
Cooling H20 Changeover, LM H20, (LCG) to PLSS H20 . . . . . 4.15-28
Cooling H20 Changeover, PLSS H20 to LM H20 (LCG) 4.15-28
CO2 lt (malfunction procedure) 5.2-54
Disconnect From LM ECS & Communications 4.14-8
ECS Activation & Checkout 4.2-21
ECS Basic (Unstaged & Staged) 4.13-23
ECS caut lt (malfunction procedure) 5.2-54
ECS Periodic Monitoring (Staged) 4.13-7
ECS Periodic Monitoring (Unstaged) 4.13-5
ECS Prestaging Check 4.12-8
ECS (Subsystem Management) 4.13-3
ECS Status (Two Men on Lunar Surface) 4.15-24
GLYCOL caut lt (malfunction procedure) 5.2-54
GLYCOL comp lt (malfunction procedure) 5.2-55
GLYCOL press - low or decr (malfunction procedure) 5.2-56
Glycol Pump Check 4.2-21
GLYCOL temp - high or incr (malfunction procedure) 5.2-55
H20 Dispenser Activation 4.13-16
H20 QUANTITY - low or decr abnormally (malfunction procedure) 5.2-50
H20 SEP lt (malfunction procedure) 5.2-54

Page

LCG Recharge Procedure 4.13-14
O2 Demand Regulator Checkout 4.2-24
O2 Demand Regulator Check (Alternative), In-Flight 4.2-27
O2 QTY caut lt (malfunction procedure) 5.2-53
O2 QUANTITY - low or decr (malfunction procedure) 5.2-53
O2 Supply Activation 4.2-23
PART PRESS CO2 - high (malfunction procedure) 5.2-54
Primary LiOH Cartridge Replacement 4.13-9
Secondary LiOH Cartridge Replacement 4.13-10
SUIT FAN lt (malfunction procedure) 5.2-54
SUIT/FAN warn lt (malfunction procedure) 5.2-52
Suit Fan Activation, Checkout, and Water Separator Check 4.2-23
SUIT ISOL Valve Check 4.2-22
Suit Leak in Depressurized Cabin 5.3-4
SUIT PRESS - high (egress mode) (malfunction procedure) 5.2-52
SUIT PRESS - low (malfunction procedure) 5.2-52
Egress, Final Subsystem Configuration for 4.15-23
Emesis Disposal 4.13-48
Enable W-Matrix Initialization 4.6-33
EPS
A-C voltage high (malfunction procedure) 5.2-40
Ascent Battery Activation & Checkout 4.2-45
Bat tb abnormal (UNSTAGED) (malfunction procedure) 5.2-39
BATTERY caut lt (STAGED) (malfunction procedure) 5.2-39
BATTERY caut lt (UNSTAGED) (malfunction procedure) 5.2-39
Bus functions lost (malfunction procedure) 5.2-41
Circuit Breaker Activation 4.2-10
DC BUS warn lt (STAGED) (malfunction procedure) 5.2-38
DC BUS warn lt (UNSTAGED) (malfunction procedure) 5.2-36
EPS Activation & Checkout 4.2-5
EPS Basic (Staged) 4.13-36
EPS Basic (Unstaged) 4.13-35
EPS Check, Post-DPS Burn 4.13-38
EPS Periodic Monitoring (Staged) 4.13-40
EPS Periodic Monitoring (Unstaged) 4.13-38
EPS Poststaging Check 4.12-8
EPS Preparation for DPS Burn 4.13-36
EPS Prestaging Check 4.12-6
EPS Prestaging Check - Lunar Contingency (One Ascent Battery Only) 5.4-2
EPS (Subsystem Management) 4.13-35
INVERTER caut lt (malfunction procedure) 5.2-40
LCA Duty Cycle During Secondary Coolant Loop Operation 4.13-40
Loss of CDR Bus During Powered Descent 5.3-11
Loss of LMP Bus During Powered Descent 5.3-13
Lunar Stay Battery Management 4.13-41
VOLTS - low (malfunction procedure) 5.2-36
Erasable Modification Routine (R01) 4.6-41
EVA Antenna, Raise 4.15-32
EVA Antenna, Stow 4.15-32
Event Timer, Set 4.13-44
External ΔV (LGC P30, AEA 410+50000) 4.7-2
Extravehicular Activity 4.15-34

F

Final Automatic Request Terminate Routine (R00) 4.6-40
Fire/Smoke in Cabin (Not in Suit Loop) 5.3-3
Fire/Smoke in Suit Loop 5.3-3
FITH, AGS 4.12-14
Flagwords 4.4-33
Forward Hatch (Cabin Side), Close 4.15-13
Forward Hatch (Cabin Side), Open 4.15-13

ALPHABETICAL INDEX (cont)

Page

Forward Hatch Opening (Cabin Side), Emergency 5.3-8
Forward Hatch (Outside), Close 4.15-14
Forward Hatch (Outside), Open 4.15-13
Forward Velocity/Lateral Velocity Display 4.5-36
Fresh Start 4.6-29

G

G&C
AGS att error nonzero when it should be zero (malfunction procedure) 5.2-4
AGS att error zero when it should be nonzero (malfunction procedure) 5.2-4
FDAI att error abnormal (malfunction procedure) 5.2-4
FDAI OFF flag appears (malfunction procedure) 5.2-5
FDAI total att abnormal (malfunction procedure) 5.2-5
G&C General 4.6-3
G&C Reference Data 4.4-2
G&C Reference Modes 4.5-2
Rate display abnormal (malfunction procedure) 5.2-5
Rate gyro test fails (malfunction procedure) 5.2-6
RNG/RNG RT pwr/sig fail lt (malfunction procedure) 5.2-6
GDA Enable 4.5-27
Gylcol Loop Activation, Primary 4.2-9
Glycol Pump Check 4.2-21
Ground Track Determination Program (P21) 4.8-2

H

HEATERS
HEATER caut lt (malfunction procedure) 5.2-62
Heater Control Temperature Monitor Display 4.5-39
Heaters Status Check 4.13-44
LR temp abnormal (malfunction procedure) 5.2-63
RCS quad 1 (2, 3, 4) temp abnormal (malfunction procedure) 5.2-63
RR temp abnormal (malfunction procedure) 5.2-62
S-band antenna temp abnormal (malfunction procedure) 5.2-62
H2O Dispenser Activation 4.13-16
LCG Recharge 4.13-14

I

ICDU Zero 4.6-30
IMU Coarse Alignment, Docked Manual 4.9-16
IMU Orientation Determination Program (P51) 4.9-2
IMU Power-Down 4.6-5
IMU Power-Up (LGC Off) 4.6-4
IMU Power-Up (LGC Operating) 4.6-4
IMU Realign Program (P52) 4.9-5
Increment LGC Time 4.6-32
In-Flight O2 Demand Regulator Check (Alternative) 4.2-27
Initial Entry Status Check 4.2-2
Initial Intravehicular Transfer to LM 4.14-2
Initialize Erasable Dump Via Downlink 4.6-32
Input Δ RLS for Pinpoint Landing 4.6-41
Installation of 16-MM Sequence Camera Wedge 4.13-49
Install Drogue (CSM Side) 4.14-12

Page

Install Drogue (LM Side) 4.14-11
Interrupt Integration 4.6-38
Intravehicular Operations 4.14-2
Intravehicular Transfer to CSM 4.14-5
Intravehicular Transfer to LM (Second Crewman) 4.14-3
ISS Coarse Align 4.9-14

J

Jet Select Logic 4.4-8

L

Landing Confirmation Program (P68) 4.10-92
Landing Gear Deploy 4.2-61
Landing Phase (ROD) Program (P66) 4.10-88
Landing Radar Checkout 4.6-80
Landing Radar Power-Down 4.6-83
Landing Radar Power-Up 4.6-79
Landing Radar Spurious Test Routine (R77) 4.6-82
Landing Radar to Position 2, Command 4.6-82
LCA Duty Cycle During Secondary Coolant Loop Operation 4.13-40
LCG Recharge 4.13-14
LGC/CMC Clock Synchronization Routine (R33) 4.6-20
LGC/DSKY Restrictions 4.4-2
LGC Erasable Memory Display/Update 4.6-35
LGC Idling Program (P00) 4.6-5
LGC Power-Down Program (P06) 4.6-4
LGC Power-Up 4.6-3
LGC Programs 4.4-10
P00 - LGC Idling 4.6-5
P06 - LGC Power-Down 4.6-4
P12 - Powered Ascent 4.10-92
P20 - Rendezvous Navigation 4.8-6
P21 - Ground Track Determination 4.8-2
P22 - Lunar Surface Navigation 4.8-22
P25 - Preferred Tracking Attitude 4.6-26
P27 - LGC Update 4.6-6
P30 - External ΔV 4.7-2
P32 - Coelliptic Sequence Initiation (CSI) 4.7-7
P33 - Constant Δ Altitude (CDH) 4.7-14
P34 - Transfer Phase Initiation (TPI) 4.7-20
P35 - Transfer Phase Midcourse (TPM) 4.7-28
P40 - DPS Thrust 4.10-2
P41 - RCS Thrust 4.10-38
P42 - APS Thrust 4.10-22
P47 - Thrust Monitor 4.10-50
P51 - IMU Orientation Determination 4.9-2
P52 - IMU Realign 4.9-5
P57 - Lunar Surface Align 4.9-22
P63 - Braking Phase 4.10-73
P64 - Approach Phase 4.10-86
P66 - Landing Phase (ROD) 4.10-88
P68 - Landing Confirmation 4.10-91
P70 - DPS Abort 4.10-106
P71 - APS Abort 4.10-116
P72 - CSM Coelliptic Sequence Initiation Targeting 4.7-38
P73 - CSM Constant Δ Altitude Targeting 4.7-41
P74 - CSM Transfer Phase Initiation Targeting 4.7-43
P75 - CSM Transfer Phase Midcourse Targeting 4.7-46
P76 - Target ΔV (CSM) 4.7-33
P77 - Target ΔV (LM) 4.7-34

Page

LGC Routines 4.4-11
R00 - Final Automatic Request Terminate 4.6-40
R01 - Erasable and Channel Modification 4.6-41
R03 - DAP Data Load 4.6-8
R04 - RR/LR Self-Test 4.6-64,80
R05 - S-Band Antenna 4.6-37
R30 - Orbit Parameter Display 4.8-3
R31 - Rendezvous Parameter Display 4.6-16
R33 - LGC/CMC Clock Synchronization 4.6-20
R36 - Rendezvous Out-of-Plane Display 4.7-32
R47 - AGS Initialization 4.6-23
R60 - Attitude maneuver routine 4.6-12,-15,-27;4.8-8,-11,-14,-17;
4.9-10;4.10-27,-44,-65,-79;4.12-17
R62 - Crew-Defined Maneuver 4.6-11
R63 - Rendezvous Final Attitude 4.6-13
R77 - LR Spurious Test 4.6-82
LGC Self-Test 4.6-17
LGC Update Program (P27) 4.6-6
Lighting
AOT Lighting Check 4.2-17
Caution & Warning Array Checkout 4.2-19
COAS Lighting Check 4.2-18
DSKY Light Test 4.6-19
Lighting Activation & Checkout 4.2-16
LiOH Cartridge Replacement, Primary 4.13-9
LiOH Cartridge Replacement, Secondary 4.13-10
LM-to-CSM Power Transfer, Unstaged 4.3-28
Load IMU Attitude Error Meters 4.6-31
Low-Power S-Band Backup Voice, LBR Check With Steerable Antenna 4.2-40
LRV Deployment 4.15-37
Lunar Launch Contingency Stowage 4.15-42
Lunar Stay Operations 4.15-2
Lunar Surface Navigation 4.8-22B
Lunar Surface Navigation Program (P22) 4.8-22B

M

Malfunction Procedures 5.2-1
Abort Guidance Section 5.2-13
AGS warn lt 5.2-14
DEDA response abnormal 5.2-14
Ascent Propulsion Section 5.2-27
ASC He REG 1 (2) tb - bp 5.2-29
ASC HI REG caut lt 5.2-29
ASC PRESS warn lt 5.2-28
ASC QTY caut lt 5.2-29
Fuel or oxid press abnormal 5.2-29
Fuel or oxid temp abnormal 5.2-29
He press abnormal or decr 5.2-29
Communication Subsystem 5.2-43
Cannot acquire phaselock 5.2-46
Loss of ICS 5.2-44
Loss of S-band voice comm 5.2-45
Loss of VHF voice comm with CSM 5.2-44
Loss of voice comm with EVA (one man EVA) 5.2-47
MSFN reports loss of PCM. S-band voice OK 5.2-46
One crewman has abnormal (unselected) hot mike 5.2-44
S BD RCVR caut lt 5.2-46

ALPHABETICAL INDEX (cont)

	Page
Control Electronics Section	5.2-15
Abnormal dynamics during MPS thrusting	5.2-19
Abnormal vehicle dynamics (non-MPS)	5.2-16
AGS Pulse or direct cmds abnormal	5.2-18
CES AC warn lt	5.2-22
CES DC warn lt	5.2-22
ENG GMBL caut lt	5.2-20
ENG THRUST & CMD THRUST ind do not agree/off schedule	5.2-21
LM drifts out of deadband	5.2-17
No MPS ignition at TIG = 0	5.2-21
No MPS shutdown	5.2-20
PGNS minimum impulse (V76) cmds abnormal	5.2-17
PRE AMPS caut lt	5.2-22
Premature MPS ignition	5.2-20
Prop cmds abnormal	5.2-18
TTCA cmds abnormal	5.2-19
Descent Propulsion Section	5.2-23
DES He REG 1 (2) tb - bp	5.2-25
DES He REG 2 (1) tb - gray	5.2-25
DES QTY warn lt	5.2-26
DES REG warn lt	5.2-24
Fuel/oxid press abnormal	5.2-24
Fuel/oxid temp abnormal	5.2-25
FUEL VENT/OXID VENT tb - abnormal	5.2-26
He press abnormal	5.2-25
PQGS ind abnormal	5.2-26
Electrical Power Subsystem	5.2-35
A-C voltage high	5.2-40
5 Bat tb abnormal (UNSTAGED)	5.2-40
5 Bat tb abnormal (UNSTAGED)	5.2-40
Bat tb abnormal (STAGED or UNSTAGED)	5.2-40
BATTERY caut lt (STAGED or UNSTAGED)	5.2-39
Bus functions lost	5.2-42
DC BUS warn lt (STAGED)	5.2-38
DC BUS warn lt (UNSTAGED)	5.2-36
INVERTER caut lt	5.2-40
VOLTS - low	5.2-36
Environmental Control Subsystem	5.2-49
CABIN press - high	5.2-51
CABIN PRESS - low or decr	5.2-50A
CABIN warn lt	5.2-50A
CO2 lt	5.2-54A
ECS caut lt	5.2-54
GLYCOL caut lt	5.2-55
GLYCOL comp lt	5.2-54A
GLYCOL press - low or decr	5.2-56
GLYCOL temp - high or incr	5.2-55
H2O QUANTITY - low or decr abnormally	5.2-50
H2O SEP lt	5.2-54
O2 QTY caut lt	5.2-53
O2 QUANTITY - low or decr	5.2-53
PART PRESS CO2 - high	5.2-54A
SUIT FAN lt	5.2-54
SUIT/FAN warn lt	5.2-52
SUIT PRESS - high (egress mode)	5.2-52
SUIT PRESS - low	5.2-52
Explosive Devices	5.2-57
ED RELAYS caut lt	5.2-58
STAGE SEQ RELAY SYS A or B lt - off when MASTER ARM - ON	5.2-59
STAGE SEQ RELAYS SYS A & B lts - off when MASTER ARM - ON	5.2-59
MSFN Advises Both Sys A & B K7-K15 Failed	5.2-60

ALPHABETICAL INDEX (cont)

Page

Guidance & Control Flight Displays 5.2-3
AGS att error nonzero when it should be zero 5.3-4
AGS att error zero when it should be nonzero 5.2-4
FDAI att error abnormal 5.2-4
FDAI OFF flag appears 5.2-5
FDAI total att abnormal 5.2-5
Rate display abnormal 5.2-5
Rate gyro test fails 5.2-6
RNG/RNG RT pwr/sig fail lt 5.2-6
Heaters 5.2-61
HEATER caut lt 5.2-62
LR temp abnormal 5.2-63
RCS quad 1 (2, 3, 4) temp abnormal 5.2-63
RR temp abnormal 5.2-62
S-band antenna temp abnormal 5.2-62
Primary Guidance & Navigation Section 5.2-7
ALT lt 5.2-10
GIMBAL LOCK lt 5.2-9
ISS warn lt 5.2-8
LGC test 5.2-12
LGC warn lt 5.2-9
NO TRACK lt 5.2-11
RESTART lt 5.2-9
RNDZ RDR caut lt 5.2-11
TEMP lt 5.2-9
TRACKER lt 5.2-8
VEL lt 5.2-10
Reaction Control Section 5.2-31
He press low or decr 5.2-32
PQMD abnormal 5.2-32
RCS A (B) REG warn lt 5.2-33
RCS caut lt 5.2-32
RCS press or temp abnormal 5.2-32
RCS TCA warn lt 5.2-33
TB abnormal (QUAD) 5.2-33
TB abnormal (MAIN SOV, CRSFD, ASC FEED) 5.2-33
MESA Operation 4.15-34
MESA Equipment Handling and Transfer 4.15-36
MESA Exterior Blanket Removal 4.15-35
MESA Height Adjustment 4.15-35
MESA Manual Deployment 4.15-35
MESA Remote Deployment 4.15-34
SRC Removal 4.15-37
TV Camera Deployment 4.15-36
Mission Timer, Set 4.2-20
Mode I Attitude Error Display 4.6-38
Mode II Attitude Error Display 4.6-38
MPS Basic (Staged) 4.13-28
MPS Basic (Unstaged) 4.13-28

N

Navigation 4.8-2
Navigation, LM Rendezvous 4.8-5
Navigation, Lunar Surface 4.8-22
Navigation, Orbital 4.8-2
Noun List 4.4-14

ALPHABETICAL INDEX (cont)

Page

O

Option Codes (V04 N06, V04 N12, or V05 N06) 4.4-28
Orbital Navigation 4.8-2
Orbital Thrust 4.10-2
Orbit Parameter Display (PGNCS R30 & AGS) 4.8-3
ORDEAL Initialization 4.6-33
Overhead Hatch (CSM Side), Close 4.14-10
Overhead Hatch (CSM Side), Open 4.14-9
Overhead Hatch (LM Side), Close 4.14-10
Overhead Hatch (LM Side), Open 4.14-9
02 Demand Regulator Checkout 4.2-24
02 Demand Regulator Check (Alternative), In-Flight 4.2-27
02 Supply Activation 4.2-23

P

PGA Cooling, Reverse 02 Umbilicals for 4.13-15
PGNCS
AGS Initialization Routine (R47) 4.6-23
Crew-Defined Maneuver Routine (R62) 4.6-11
DAP Data Load Routine (R03) 4.6-8
DSKY Light Test 4.6-19
Erasable Modification Routine (R01) 4.6-41
Enable W-Matrix Initialization 4.6-33
Final Automatic Request Terminate Routine (R00) 4.6-40
Fresh Start 4.6-29
ICDU Zero 4.6-30
IMU Power-Down 4.6-5
IMU Power-Up (LGC Off) 4.6-4
IMU Power-Up (LGC Operating) 4.6-4
Increment LGC Time 4.6-32
Initialize Erasable Dump Via Downlink 4.6-32
Input ΔRLS For Pinpoint Landing 4.6-41
Interrupt Integration 4.6-38
LGC/CMC Clock Synchronization Routine (R33) 4.6-20
LGC Erasable Memory Display/Update 4.6-35
LGC Idling Program (P00) 4.6-5
LGC Power-Down Program (P06) 4.6-4
LGC Power-Up 4.6-3
LGC Self-Test 4.6-17
LGC Update Program (P27) 4.6-6
Load IMU Attitude Error Meters 4.6-31
Mode I Attitude Error Display 4.6-38
Mode II Attitude Error Display 4.6-38
Move This Vehicle State Vector to Other State Vector 4.6-39
ORDEAL Initialization 4.6-33
PGNCS/AGS 4.7-2
PGNCS/AGS Align 4.9-17
PGNCS (Alignment) 4.9-2
PGNCS Attitude Hold/Rate Command 4.5-4
PGNCS Attitude Rate/Error Display 4.5-32
PGNCS Automatic 4.5-2A
PGNCS Lunar Surface Align Program (P57) 4.9-22
PGNCS Minimum Impulse 4.5-4A
PGNCS (Prethrust) 4.7-32
PGNCS Total Attitude Display 4.5-30
PGNS 4.6-3
PIPA Bias Measurement & Loading 4.6-21
Preferred Tracking Attitude Program (P25) 4.6-26
Rate of Descent Controller/LGC Interface Check 4.6-23

ALPHABETICAL INDEX (cont)

Page

Rendezvous Final Attitude Routine (R63) 4.6-13
Rendezvous Parameter Display Routine (R31) 4.6-16
Restart 4.6-36
RR CDU Zero 4.6-31
S-Band Antenna Routine (R05) 4.6-37
Show Banksum 4.6-17
W-Matrix Error Display 4.6-39
PIPA Bias Measurement & Loading 4.6-21
PLSS
Cooling H20 Changeover, LM H20 (LCG) to PLSS H20 . . . . . 4.15-28
Cooling H20 Changeover, PLSS H20 to LM H20 (LCG) 4.15-28
PLSS/EVCS Electrical Checkout, One-Man EVA 4.15-20
PLSS/EVCS Electrical Checkout, Two-Man EVA 4.15-17
PLSS Recharge 4.15-28
Feedwater Reservoir and Auxiliary Tank Recharge, Gravity Environment . . . 4.15-29
Oxygen Recharge 4.15-28
Vacuum Changeover - PLSS to LM 5.3-5
Post-EVA Final Subsystems Configuration 4.15-26A
Powered Ascent 4.10-92
Powered Ascent Program (P12) With AGS Followup/In Control 4.10-92
Powered Descent 4.10-73
Power Transfer, LM-to-CSM (Unstaged) 4.3-21
Preferred Tracking Attitude Program (P25) 4.6-26
Prelaunch Closeout Check 4.1-2
Prethrust 4.7-2
Primary Glycol Loop Activation 4.2-9
Primary Sublimator Activation 4.2-16
Propulsion (Subsystem Management) 4.13-28

R

Radar 4.6-64
Command Landing Radar to Position 2 . . . . . 4.6-82
Landing Radar Checkout 4.6-80
Landing Radar Power-Up 4.6-79
Landing Radar Power-Down 4.6-83
Landing Radar Spurious Test Routine (R77) 4.6-82
Radar Signal Strength Display 4.5-39
Rendezvous Radar Coarse Align 4.6-69
Rendezvous Radar Continuous Designate, Terminate 4.6-79
Rendezvous Radar Initial Activation & Checkout 4.6-64A
Rendezvous Radar LM State Vector Update, AGS Manual 4.8-19
Rendezvous Radar Manual Designation to Mode II 4.6-70
Rendezvous Radar Manual Side-Lobe Acquisition Check & Main-Lobe Acquisition Verification 4.6-71
Rendezvous Radar Power-Up 4.6-64
RR Azimuth Rate/Elevation Rate Display 4.5-36
RR CDU Zero 4.6-31
RR LOS Azimuth and Elevation Display (V85) 4.5-40
RR Shaft Angle/Trunnion Angle Display 4.5-35
Range/Range Rate Display 4.5-37
Rate Gyro Check 4.6-54
Rate of Descent Controller/LGC Interface Check 4.6-23
RCS Burn for Lunar Impact (Unmanned Ascent Stage) 4.10-53
RCS Hot/Cold Firing Check 4.2-57
RCS Peridoic Monitoring 4.13-34
RCS Pressurization 4.2-54
RCS Primary Coil Enable 4.5-2
RCS Staging 4.12-9
RCS Thrust Program (P41) With AGS Followup/In Control 4.10-38
RCS Translation 4.5-28
Relay Mode: CSM Voice to MSFN 4.13-22
Relay Mode: EVA (One-Man EVA) 4.13-21
Relay Mode: EVA (Two-Man EVA) 4.13-20

ALPHABETICAL INDEX (cont)

Page

Rendezvous Final Attitude Routine (R63) 4.6-13
Rendezvous Navigation, LM 4.8-6
Rendezvous Navigation Program (P20), LM 4.8-6
Rendezvous Out-of-Plane Display Routine (R36) 4.7-32
Rendezvous Parameter Display Routine (R31) 4.6-16
Restart 4.6-36

S

S-Band Activation & Checkout, Using Omni Antenna 4.2-34
S-Band Antenna Cooldown 4.13-26
S-Band Antenna Routine (R05) 4.6-37
S-Band Backup Voice & Keying Check 4.2-45
S-Band Configuration for LOS 4.13-19
S-Band CWEA Enable 4.13-23
S-Band FM Check 4.2-43
S-Band LBR Data Enable 4.13-23
S-Band Ranging, Voice, and Telementry Check 4.2-43
S-Band Steerable Antenna Activation and Checkout 4.2-34
Secondary S-Band Transceiver & Power Amplifier Check 4.2-44
Set Mission Timer 4.2-20
Shades, Deploy 4.13-51
Shades, Stow 4.13-51
Show Banksum 4.6-17
Sleep Station 4.15-32
  Sleep Station, Deploy 4.15-32
  Sleep Station, Stow 4.15-33
SRC Removal 4.15-37
Staging 4.12-2
Star/Planet List 4.4-26
State Vector, Move This Vehicle State Vector to Other 4.6-39
Sublimator Activation, Primary 4.2-16
Sublimator Dryout 4.3-10
Sublimator Dryout, Preparation for 4.3-2
Subsystem Activation 4.2-2
Subsystem Configuration for EVA Preparation 4.15-15
Subsystem Deactivation 4.3-2
Subsystem Deactivation, Final 4.3-12
Subsystem Management 4.13-3
Suit Fan Activation, Checkout, and Water Separator Check 4.2-23
SUIT ISOL Valve Check 4.2-22
Symbols and Abbreviations, Definitions of D-1

T

Target ΔV Program (P76) 4.7-33
Thrust 4.10-2
Thrust Display 4.5-38
Thrust Monitor Program (P47) 4.10-50
Thrust, Orbital 4.10-2
Timer Electroluminescent (EL) Numeric Check 4.2-20
Torque Gyros 4.9-14A
Transfer Phase Initiation (LGC P34, AEA 410+30000, Search; & 410+40000, Execute) . 4.7-20
Transfer Phase Midcourse (LGC P35, AEA 410+40000) 4.7-28
Transfer to CSM, Crewman Vacuum, ... 5.3-6
Transfer to CSM, Intravehicular 4.14-5
Transfer to LM (Second Crewman), Intravehicular 4.14-3
Transfer to LM, Initial Intravehicular 4.14-2

ALPHABETICAL INDEX (cont)

Page

Transfer Umbilical, Crewman Disconnect 4.2-28
Transfer, Using OPS, Emergency 5.3-7
Translation Control Modes 4.5-14
Tunnel Pressure Equalization From LM 4.14-12
Tunnel Pressurization From LM, Using LM Consumables 4.14-13
Tunnel Pressurization From LM, Without Using LM Consumables 4.14-12
TV Camera Deployment 4.15-36
TV Camera Operation 4.15-42

U

Undocking From CSM, LM 4.11-2
Urine Collection Assembly, Transfer Urine to Small 4.13-47
Utility Lights Activation & Checkout 4.2-17

V

Vacuum Brush Operation 4.14-14
Vacuum Changeover - PLSS to LM 5.3-5
Verbs
  Verb List 4.4-12
  V40 - Zero CDU (N20) 4.6-30
  V40 - Zero CDU (N72) 4.6-31
  V41 - Coarse-Align CDU (N20) 4.9-14
  V41 - Coarse-Align CDU (N72) 4.6-69
  V42 - Fine-Align IMU 4.9-15
  V43 - Load FDAI Error Needles 4.6-31
  V44 - Terminate RR Continuous Designate 4.6-79
  V47 - Initialize AGS (R47) 4.6-23
  V48 - Start DAP Data Load Routine (R03) 4.6-8
  V49 - Start Crew-Defined Maneuver (R62) 4.6-11
  V55 - Increment LGC Time 4.6-32
  V59 - Command LR to Position 2 . . . . . 4.6-82
  V61 - Display DAP Attitude Error 4.6-38
  V62 - Display Total Attitude Error 4.6-38
  V63 - RR/LR Self-Test (R04) 4.6-64,80
  V64 - Start S-Band Antenna Routine (R05) 4.6-37
  V66 - Vehicles Attached: Move This Vehicle State Vector to Other Vehicle . . . 4.6-39
  V67 - W-Matrix RMS Error Display 4.6-39
  V69 - Restart 4.6-36
  V70 - Update Liftoff Time 4.6-6
  V71 - Universal Update, Block Address 4.6-6
  V72 - Universal Update, Single Address 4.6-6
  V73 - Update LGC Time 4.6-6
  V74 - Initialize Erasable Dump via Downlink 4.6-32
  V78 - Start LR Spurious Return Test (R77) 4.6-82
  V79 - Stop LR Spurious Return Test (R77) 4.6-82
  V82 - Request Orbit Parameter Display (R30) 4.8-3
  V83 - Request Rendezvous Parameter Display (R31) 4.6-16
  V89 - Start Rendezvous Final Attitude Maneuver (R63) 4.6-13
  V90 - Request Rendezvous Out-of-Plane Display (R36) 4.7-32
  V91 - Show Banksum 4.6-17
  V93 - Enable W-Matrix Initialization 4.6-33
  V96 - Interrupt Integration and go to P00 . . . . . 4.6-38
VHF Activation & Checkout 4.2-31
VHF B Data Enable 4.13-23
VHF B Simplex Check 4.2-33
VHF Ranging Check 4.13-24

ALPHEBETICAL INDEX (cont)

Page

W

Waste Management 4.13-44
Defecation Disposal 4.13-49
Emesis Disposal 4.13-48
Transfer Urine to D/S Waste Container (Alternative Mode) 4.13-46
Transfer Urine to D/S Waste Container (Prime Mode) 4.13-45
Transfer Urine to Small Urine Collection Assembly 4.13-47
Water Separator Check 4.2-23
W-Matrix Error Display 4.6-39
Window Shades (CDR, LMP, & Docking) 4.13-51

Fantastic Plastic Models

Resin model kits... Conceptual designs and science fiction subjects.

www.up-ship.com

Rockwell Shuttle Concept

Northop Nuclear Flying Wing

"Whispercraft"

Aurora

Colonial One

Delta Clipper DC-X

Battlestar Pegasus

And many more!

Atomic Bomber

Can also build models and kit masters. Contact scottlowther@ix.netcom.com for more information.

Aerospace Projects Review

The journal of unbuilt aircraft and spacecraft projects has returned in completely revised and greatly expanded form, now on CD-ROM. As well as greatly expanded text, improved quality images (and larger numbers of 'em), APR now features artwork commissioned specifically for each issue.

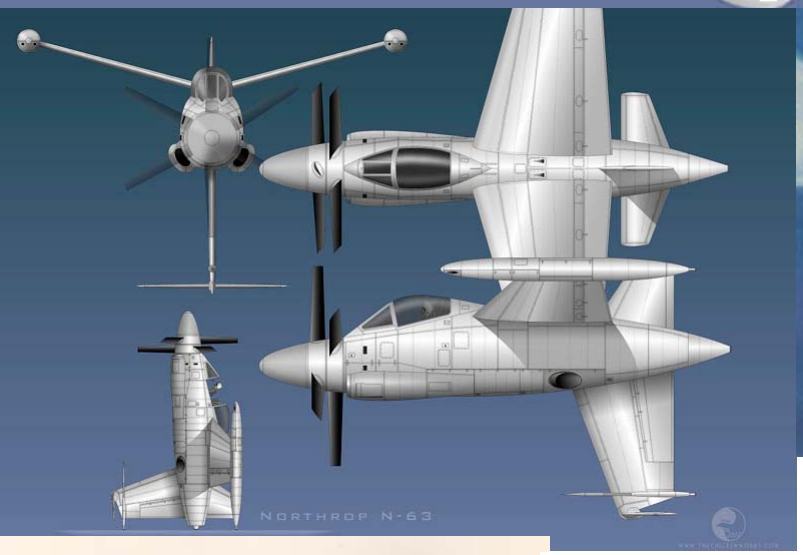

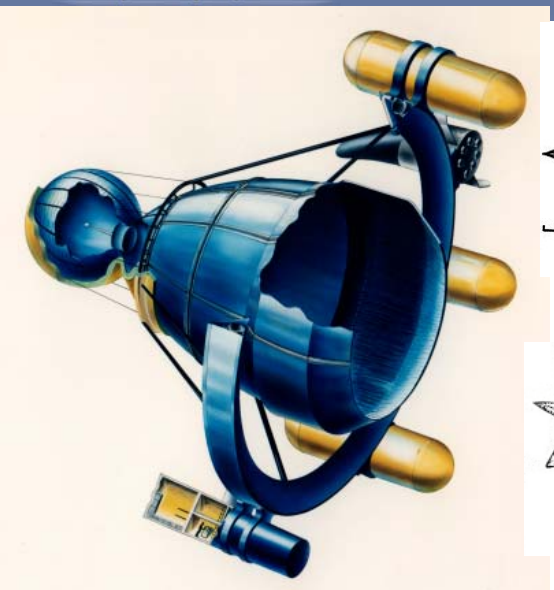

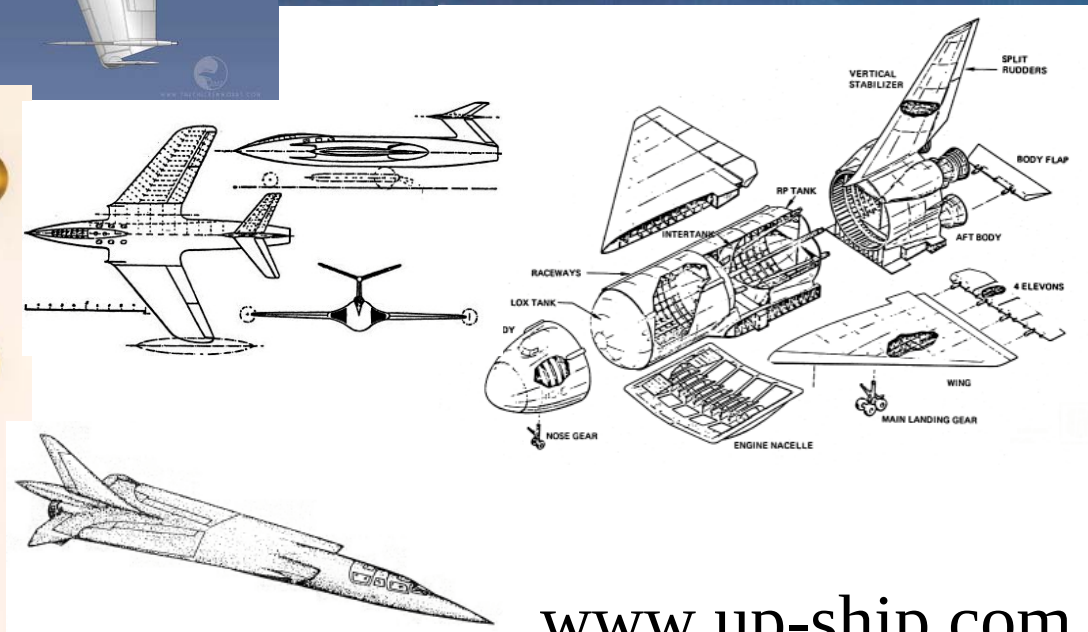

www.up-ship.com

If you liked this CD-ROM…

Then you'll go absolutely out of your mind when you see the other aerospace history products that are available. Rare documents, photo sets and large-format drawings are all available on CD-ROM. New products are being added constantly!

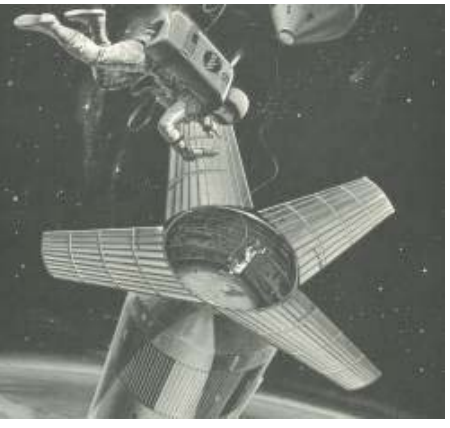

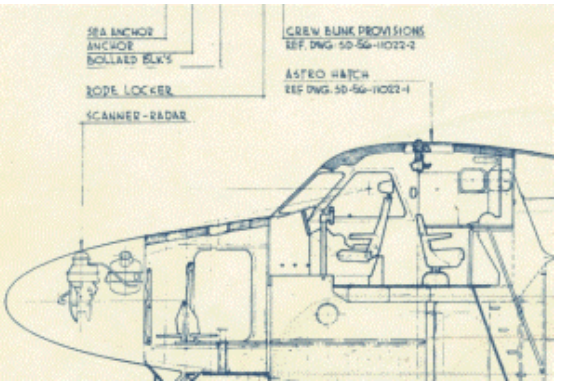

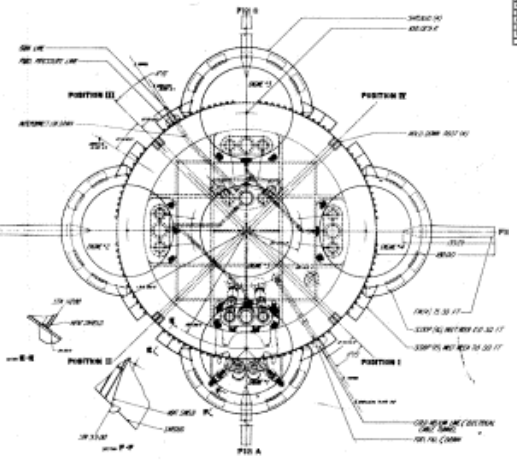

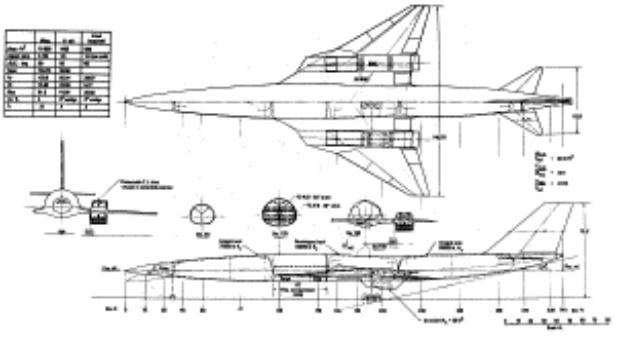

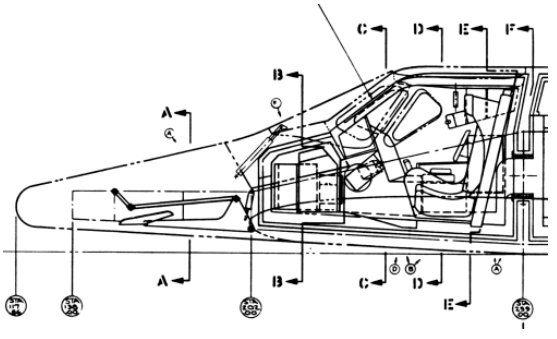

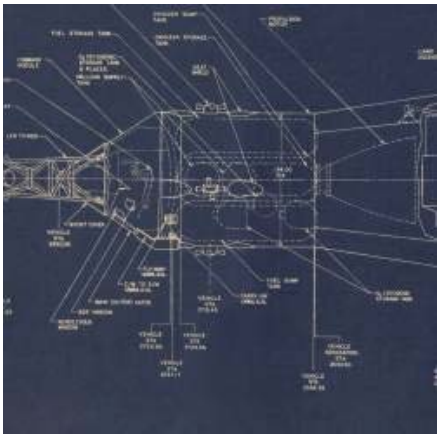

www.up-ship.com